3D Model

***Adobe® Reader® 9** or later software is required to view this 3D image. Get Adobe® Reader® here.

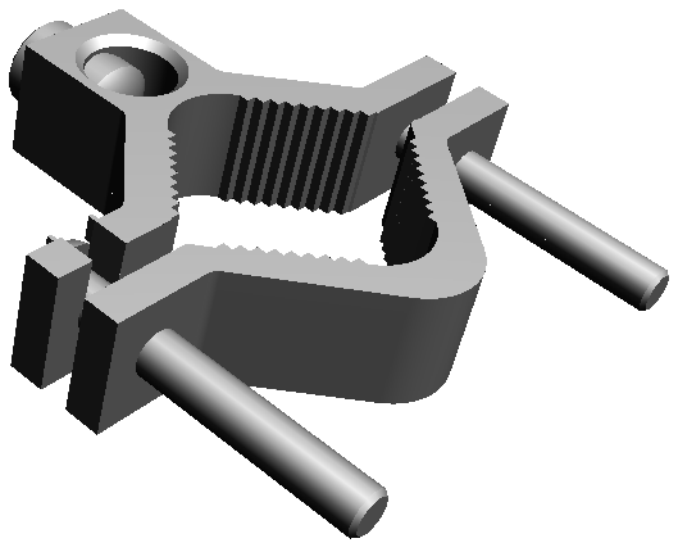

Directions for 3D model:

1.**To Enable Content** - Click on the model to activate interactive features.
2. **To Rotate** - Click on the model and drag it in the direction you want it to rotate.
3. **To Move** - Hold down the Ctrl key to click and drag the model to a different position.
4. **To Zoom In/Out** - Hold down the Shift key, click the model and move your mouse up/down to your desired size.
5. **Additional Features** - Advanced features are available by using the given tool bar or by right-clicking the model.

Contact BURNDY:

US:
1-800-346-4175

Canada:
1-800-387-6487

Customer Service Dept.

7 Aviation Park Drive
Londonderry, NH 03053
1-800-346-4175
1-603-647-5299 (International)

Tool Service Center

Littleton Industrial Park
Littleton, NH 03561
1-800-426-8720