ANDERSON™ & FARGO

SUBSTATION CONNECTORS

www.hubbellpowersystems.com

HUBBELL®

Hubbell Power Systems, INC.
Terms & Conditions of Sales

These terms and conditions of sales ("terms and conditions") apply to the purchase by Buyer of any and all Hubbell Power Systems, Inc. ("HPS") products. HPS hereby gives notice of its rejection to any different or additional terms and conditions other than as stated herein. Buyer's acceptance of the provisions of HPS's terms and conditions as recited herein shall be conclusively presumed upon Buyer's receipt of the product(s), or if no written objection is received by HPS within fifteen (15) days from the date on HPS's order acknowledgment, whichever event shall first occur.

PRICING
Refer to appropriate Price Schedule, unless otherwise quoted.

TERMS
Payment terms are net 30 days. Invoices will be dated the day of shipment. A service charge of 1-1/2% per month or, if such rate exceeds the maximum lawful rate, the maximum lawful rate shall be assessed on all past due accounts and shall be payable on demand.

QUOTATIONS
Unless otherwise stated in writing, HPS' quotations are subject to acceptance by the Buyer within thirty (30) days from the date of issue.

SALES AND SIMILAR TAXES
Prices do not include any sales, use, excise or similar taxes. Consequently, in addition to the price specified herein, the amount of any present or future sales, use, excise or other similar tax applicable to the sale or use of the equipment hereunder, shall be paid by the Buyer, or in lieu thereof the Buyer shall provide HPS with a tax exemption certificate acceptable to the taxing authorities.

ACCEPTANCE OF ORDERS
All orders are subject to final acceptance by HPS. Any other terms proposed by Buyer are rejected unless expressly accepted in writing. Orders shall be deemed to be executed in the State of Missouri and shall be construed and performed in accordance with the laws of that State. Acceptance of any order is subject to availability of product and the ability of HPS to deliver. Orders will be billed at prices in effect at time of shipment unless otherwise agreed. Unless otherwise stated in writing, HPS reserves the right to ship plus or minus 10% of specified quantity for special products that are made to order.

SALES BY AGENTS
Sales by agents or through overseas representatives shall be at prices, terms and conditions of sale specified by HPS. All invoices will be issued by and payment remitted to HPS.

DELAY
HPS will use reasonable efforts to meet shipment or delivery dates specified by HPS, but such dates are estimates only. In no event shall be liable for any delay or nondelivery if caused directly or indirectly by Acts of God, fire, flood, strike or lockout or other labor dispute, accident, civil commotion, riot, war, governmental regulation or order, whether or not it later proves to be invalid, or from any other cause or causes (whether or not similar to any of the foregoing) beyond HPS's control. In no case will HPS be liable for loss of profits or any special or consequential damages on account of any delay in delivery or nondelivery whether or not excused hereunder.

SHIPPING DEFERMENT
Buyer requests for shipping deferment must be approved by HPS and are subject to price negotiation.

LIMITED WARRANTY AND LIMITATION OF LIABILITY
HPS warrants to Buyer that the products sold will be free of defects in workmanship or material for a period of one (1) year (or as otherwise specified) from the date of original shipment by HPS when stored, installed, operated or maintained in accordance with recommendations of HPS and standard industry practice and when used under proper and normal use. HPS shall in no event be responsible or liable for modifications, alterations, misapplication or repairs made to its products by Buyer or others, or for damage caused thereto by negligence, accident or improper use by Buyer or others. This warranty does not include reimbursement for the expenses of labor, transportation, removal or reinstallation of the products. This warranty shall run only to the first Buyer of a product from HPS, from HPS' Buyer, or from an original equipment manufacturer reselling HPS' product, and is non-assignable and non-transferable and shall be of no force and effect if asserted by any person other than such first Buyer.

APPLICATION: HPS does not warrant the accuracy of and results from product or system performance recommendations resulting from any engineering analysis or study. This applies regardless of whether a charge is made for the recommendation, or if it is provided free of charge. Responsibility for selection of the proper product of application rests solely with the Buyer. In the event of errors or inaccuracies determined to be caused by HPS, its liability will be limited to the re-performance of any such analysis or study.

BUYER INSPECTIONS: Tests, inspections and acceptance of all material must be made at the factory. Buyer's inspectors are welcome at the factories and are provided with the necessary facilities for carrying out their work. Name and phone number of who should be contacted for inspection should be given to HPS no later than two weeks prior to scheduled shipment date.

***DISCLAIMER OF WARRANTY:* THE FOREGOING WARRANTY IS EXCLUSIVE AND IN LIEU OF ALL OTHER WARRANTIES WHETHER WRITTEN, ORAL, EXPRESSED OR IMPLIED. THERE ARE NO WARRANTIES OF MERCHANTABILITY OR FITNESS OF ANY PRODUCT FOR A PARTICULAR PURPOSE.**

EXCLUSIVE REMEDY: *Any claim by Buyer that a product is defective or non-conforming shall be deemed waived by Buyer unless submitted to HPS in writing within thirty (30) days from the date Buyer discovered, or by reasonable inspection should have discovered the alleged defect or non-conformity. Any warranty claim must be brought within one year of discovery of the alleged defect or non-conformity. Upon prompt written notice by the Buyer that a product is defective or non-conforming, HPS' liability shall be limited to repairing or replacing the product, at HPS' option.*

***LIMITATION OF LIABILITY:* IN NO EVENT AND UNDER NO CIRCUMSTANCES SHALL HPS BE LIABILE TO BUYER OR TO ANY OTHER PERSON FOR ANY INDIRECT, SPECIAL, CONSEQUENTIAL OR INCIDENTAL LOSSES OR DAMAGES, INCLUDING, WITHOUT LIMITATION, DAMAGE TO OR LOSS OF USE OF ANY PRODUCT, LOST SALES, OR PROFITS, OR DELAY OR FAILURE TO PERFORM THIS WARRANTY OBLIGATION, OR CLAIMS OF THIRD PARTIES AGAINST PURCHASER, ARISING OUT OF OR IN CONNECTION WITH THE SALE, INSTALLATION, USE OF, INABILITY TO USE, OR THE REPAIR OR REPLACEMENT OF, HPS' PRODUCTS.** *As stated herein, the term "person" shall include without limitation, any individual proprietorship, partnership, corporation or entity.*

FREIGHT ALLOWANCE and F.O.B. POINT

All shipments are F.O.B. origin. Risk of loss and title of products shall pass to Buyer upon delivery to the designated carrier. Freight is prepaid and allowed on all HPS shipments of products with a net order value of $5,000 and above to destinations within the Continental U.S.A and Canada, with the exception of USCO brand products. Freight is prepaid and allowed on all shipments of USCO brand products with a net order value of $20,000 and above. An 8% shipping and handling charge will be added to all standard shipments under the minimum net order value. Customer expedited orders will be billed at actual freight cost plus $50.00 handling. Shipments to Alaska and Hawaii are F.O.B. Pacific Coast docks, collect beyond. Tool trailers will be F.O.B. HPS' dock – no freight allowed.

HPS reserves the right to route all qualified freight allowed shipments via least expensive surface route within the Continental United States and Canada. Buyer will assume all charges for transportation specified via more expensive means. Acceptance of a specified routing does not constitute a guarantee of ship date, transit time or arrival date. HPS will not be responsible for any cartage or storage charges at destination.

HPS' responsibility for exception-free delivery ceases when the transportation company receives shipment in good condition. Claims for loss or damage must be reported directly to the carrier. HPS's willingness to assist does not indicate liability for claim or replacement.

PARTIAL RELEASE

If an order has multiple releases specified by the Buyer, each release will be treated as individual orders, relative to freight allowance and minimum billing.

BACK ORDERS

Back orders that are the responsibility of HPS will be shipped F.O.B. factory or point of shipment with freight prepaid and allowed via the most cost effective method, providing the original order qualified for freight allowance.

MINIMUM BILLING

Standard Orders -- $750 net per order. Tools -- $100 net per order. Parts -- $100 net per order.

ORDER ADD-ON POLICY

HPS' "Add-On" policy allows you to add items to an existing unshipped order for up to fifteen (15) days from the entry date of the original order. The minimum value for added products is $250. Addition of tools or parts must be $100.

DELIVERY SCHEDULE

Shipping dates provided by HPS are estimates only. HPS shall make every reasonable effort to meet Buyer's shipping requirements provided HPS promptly receives all necessary information from Buyer and approved drawings if required by HPS. HPS will not assume liability because of delayed shipment for any reason. HPS's responsibility ceases upon acceptance of shipment by carrier.

CANCELLATIONS

Cancellation of an order for current stock product requires a minimum of five (5) days' notice prior to actual ship date. Stock product orders shipped after cancellation notice is received, but before expiration of the five-day requirement, will be subject to all standard returned product conditions, noted below. Cancellation on non-stock products may be made only if no work has been performed or material purchased. If cancellation is requested after work is in progress, there will be a cancellation charge as established by HPS. Orders may not be cancelled unless HPS gives its written consent, and then only upon agreement as to applicable cancellation charges.

RETURNED PRODUCT

GENERAL CONDITIONS applying to all transactions:

1. Product is not returnable without the written consent of HPS.
2. Request for permission to return product must be made in writing within one year from date of shipment, and Buyer must provide original HPS invoice number.
3. Product to be returned must be considered standard product by HPS.
4. HPS reserves the right to refuse returns of any special or made-to-order product, regardless of condition.
5. All returned products must be in excellent, resaleable condition and packaged in the original carton. Products will be inspected upon return; and any service or repair needed to place them in first class, saleable condition will be charged and added to the restocking charge.
6. A 25% restocking charge will be deducted from all credits issued on authorized returns.
7. Return Goods Authorization (RGA) Packing List, supplied by the factory, must accompany the return shipment.
8. Return freight must be prepaid. Product must be received by HPS within sixty (60) days of issuance of RGA.
9. Net value of the return must not be less than $250.
10. HPS reserves the right to deduct for any damage sustained in transit.
11. Unauthorized returns will be refused. Equipment returned without proper authorization from HPS will, at the sole option of HPS, be returned to the Buyer freight collect, or scrapped immediately with no issuance of credit. Unauthorized product included in a return will not be credited.

BROKEN PACKAGE POLICY

Shipments will be made in standard package quantities or multiples thereof. HPS Customer Service will notify the Buyer of any orders that do not comply with this policy. The Buyer must authorize an adjustment to comply with standard package quantities before the order will be entered.

DROP SHIPMENT POLICY

A 10% net order value drop shipment charge will be added to all purchase orders requesting delivery to a location other than a recognized Buyer stocking warehouse, with the exception of full truckload and/or project material. This is in addition to any other charges to the net order.

QUOTATION PRICE PROTECTION

All prices shown in the price lists are subject to change without notice. All quotations on special products or modifications to catalog products are binding only if confirmed in writing by the factory for the period shown on the quotation. Price protection will be provided for a period of thirty (30) days from date of quotation from HPS.

ORDERS

All orders are taken and prices quoted only with the understanding that each order shall be subject to the acceptance of HPS upon such terms as we may specify when order is received. Prices to cover amount of any sales or excise tax which now or hereinafter may be imposed by any taxing authority upon this product or the sale or manufacture thereof.

PRODUCT SPECIFICATION
HPS reserves the right to discontinue products, modify designs, and change specifications or prices without incurring obligation.

INVOICING
All invoices are due and payable per the standard terms stated herein. In the case of an apparent discrepancy in a line item charge, Buyer is obligated to advise HPS Customer Service in writing of the nature of the claimed discrepancy within five (5) days of receipt of the invoice. This includes all requests for proof of delivery. A claim of discrepancy does not relieve Buyer of the absolute obligation to pay the remaining balance of the invoice in accordance with the standard terms of payment. Upon review, HPS will have sole discretion to resolve the discrepancy; and the Buyer expressly agrees to abide by HPS' decision. HPS will promptly advise Buyer of its decision regarding any disputed items or charges.

OSHA
HPS warrants that at time of shipment, the products will conform to the applicable occupational safety and health standards promulgated pursuant to the Federal Occupational Safety and Health Act of 1970, which are in effect on the date that HPS enters its acknowledgment of Buyer's order. The Buyer's exclusive remedy and HPS' liability for breach of this warranty is limited to replacement of the nonconforming products.

FAIR LABOR STANDARDS ACT AS AMENDED
HPS represents that any goods to be delivered hereunder will be produced in compliance with the requirements of the Fair Labor Standards Act of 1938, as amended.

NOTE
These Terms and Conditions supersede all those published and previously issued by The A.B. Chance Company, The Ohio Brass Company, Anderson Electrical Products, Inc., Fargo Manufacturing Company, Inc., Chardon Electrical Components, USCO Power Equipment Corporation, Hubbell Canada LP and Hubbell Power Systems, Inc.

Effective January 1, 2011

SUBSTATION CONNECTORS

Terminals

Couplers

Tees

Bus Supports

Stud Connectors

Miscellaneous & Grounding

EHV Connectors

Reference Data

ALPHA-NUMERIC INDEX

CATALOG TYPE	PAGE NO.
155	SF-39
A2CF	SA-2
ACB	SF-2
ACBI	SF-3
ACF (BOLTED)	SA-1
ACF (COMPRESSION)	SA-28
ACF (EHV)	EHV-6
ACFS	SA-32
ACFS (EHV)	EHV-7
ACHLS	SF-29
ACS	SD-1
AD	SF-13
ADCS	SD-3
ADSC	SE-1
ADSF	SE-5
ADST	SE-3
AFTF	SA-5
AL45	SB-2
AL90	SB-1
APCS	SF-6
APCSF	SF-7
ASR	SD-2
ASTC	SB-4
ASTF	SA-3
ASTT	SB-3
ATCC	SC-1
ATCF	SC-3
ATHLS	SF-30
ATSF	SD-5
ATT15	SC-9
ATT215	SC-10
ATT2C	SC-6
ATTC	SC-4
ATTF	SC-11
ATTS & ATTH	SC-7
AUDE	SD-7
AUR	SD-4
AURC	SD-6
AURF	SD-8
BA	SF-14
BCB	SF-4
BCL	SA-33
BCTCC	SC-37
BCTCF	SC-38

CATALOG TYPE	PAGE NO.
BHVSD	EHV-59
BHVSF	EHV-58
BHX	SD-15
BPCS	SF-8
BVX	SD-17
BVXA	SD-16
BW	SF-32
CBI	SF-5
CCL-EHV	EHV-4
CCLS	SA-30
CCLS-EHV	EHV-5
CDSB	SD-12
CSSB	SD-11
D2S	SE-12
DS	SE-11
DSATL	SE-6
DSC	SE-9
DST	SE-13
DSTL	SE-14
EVBCF	EHV-50
EVEDST	EHV-62
EVEDST-90	EHV-64
EVEFD	EHV-80
EVETF	EHV-17
EVETS	EHV-54
EVDCH	EHV-46
EVDCS	EHV-44
EVHS	EHV-78
EVKES	EHV-53
EVKET	EHV-15
EVKETVH	EHV-16
EVPC	EHV-77
EVS2C	EHV-72
EVS2CT	EHV-75
EVS3C	EHV-74
EVSF2	EHV-61
EVSTF	EHV-1
EVST2F	EHV-26
EVST3F	EHV-25
EVSTT	EHV-20
EVT2FD	EHV-19
EVT3FD	EHV-19
EVT2S	EHV-57
EVTBCC	EHV-31

CATALOG TYPE	PAGE NO.
EVTCF	EHV-30
EVTEB	EHV-66
EVTGS	EHV-68
EVTS	EHV-42
HVTS	EHV-42
EVTTF	EHV-29
EVTT3F	EHV-41
EVTTT	EHV-27
EVVBS	EHV-51
EVWETTR	EHV-24
EVWTEB	EHV-67
EVWTF	EHV-40
EVWTGSR	EHV-71
FB	SF-9
FS	SF-10
FSTFLG	SA-19
GB	SF-28
GC	SF-15
GC103	SF-16
GC109	SF-27
GC110	SF-21
GC111	SF-17
GC113	SF-26
GC115	SF-19
GC140	SF-23
GC141	SF-24
GC143	SF-25
GF	SF-38
HBA	SF-32
HBB	SF-32
HBG	SF-33
HBS	SF-33
HDSF	SE-16
HF	SF-34
HN	SF-34
HTJC	SF-37
HV2CF	EHV-3
HVCF	EHV-2
HVCGS	EHV-69
HVCS	EHV-43
HVDCH	EHV-46
HVDCS	EHV-44
HVEDST	EHV-62
HVEDST-90	EHV-64

ALPHA-NUMERIC INDEX

CATALOG TYPE	PAGE NO.
HVETF	EHV-17
HVETS	EHV-54
HVHS-90-D	EHV-79
HVPC	EHV-77
HVRTE	EHV-14
HVRTS	EHV-52
HVS2C	EHV-72
HVS2CT	EHV-75
HVSCCS	EHV-56
HVSF	EHV-60
HVSTF	EHV-1
HVSTT	EHV-20
HVTBCC	EHV-31
HVTEB	EHV-66
HVTTF	EHV-29
HVTTT	EHV-27
HVWTEB	EHV-67
HW	SF-34
I220	SF-41
ICA	SD-10
IFA	SF-12
ING	SF-41
L45	SB-7
L90	SB-6
ORT21	SC-34
ORT21 (EHV)	EHV-34
ORT22	SC-35
ORT22 (EHV)	EHV-33
REFERENCE DATA	ST-1
SF	SC-16
SPTP	SA-9
SSHDW	SF-35
STC8	SB-10
STF4	SA-18
STTH	SB-8
SWH	SA-11
SWHD	SA-12
SWL	SA-10
T2CC	SC-14
T2HC2HC	SC-15
TCC	SC-12
TLD	SA-8
TLS	SA-7
TP	SF-11

CATALOG TYPE	PAGE NO.
TS	SA-20
TT15	SC-23
TT215	SC-25
TT2C	SC-19
TTC	SC-17
TTF	SC-26
TTH	SC-21
UDE	SD-14
UJC	SF-37
UP	SD-13
V	SA-21
VL2	SA-15
VL3D	SA-16
VL44D	SA-17
VL4D	SA-14
VL4S	SA-13
VS/VSG	SF-40
W2CF	SA-25
W2CF-EHV	EHV-13
WC	SB-13
WCF	SA-23
WCF-EHV	EHV-12
WCI	SB-14
WCI (EHV)	EHV-23
WEB	SF-1
WEPE	EHV-70
WFTF	SA-27
WLI45	SB-16
WLI45-EHV	EHV-22
WLI90	SB-15
WLI90-EHV	EHV-22
WSATL	SE-8
WST2F-EHV	EHV-11
WSTF	SA-26
WSTFE-EHV	EHV-8
WSTFX-EHV	EHV-9
WSTFXH-EVH	EHV-10
WTESR	SF-31
WTH	SD-20
WTH-EHV	EHV-48
WTT	SC-27
WTT (EHV)	EHV-35
WTT15	SC-29
WTT15 (EHV)	EHV-37

CATALOG TYPE	PAGE NO.
WTT215	SC-31
WTT215 (EHV)	EHV-38
WTTFR	SC-33
WTTFR (EHV)	EHV-39
WUDE	SD-23
WURE	SD-19
WURE-EHV	EHV-47
WUR-EHV	EHV-49
WURF	SD-22
ZLN	SF-39

SUBSTATION CONNECTORS

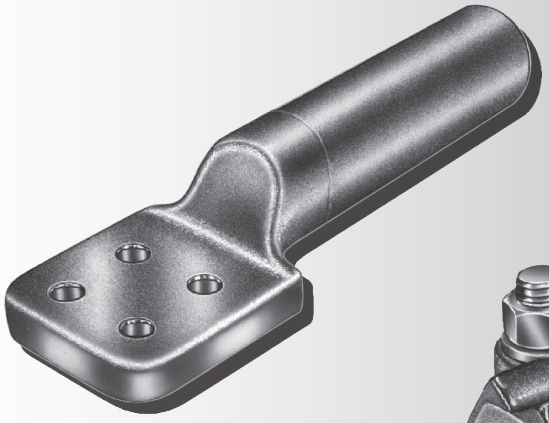

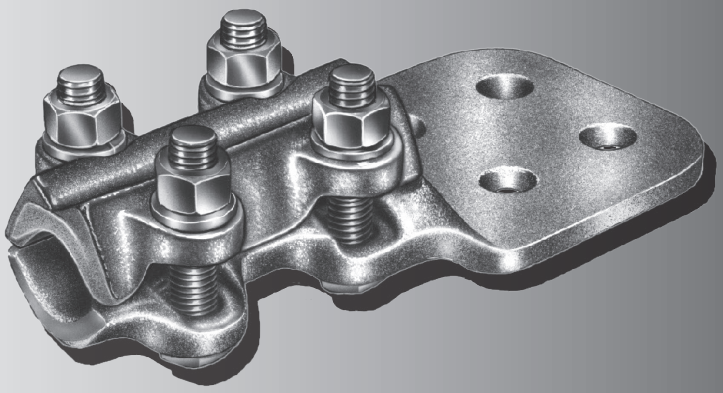

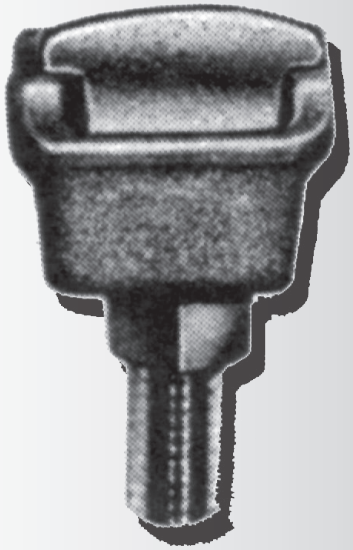

SECTION SA

TERMINALS

Aluminum Bolted
Aluminum Compression
Aluminum Weldment
Bronze Bolted
Copper Compression

TERMINALS

BOLTED/ALUMINUM

A2CF ..... STRAIGHT BOLT LUG, TWO CABLES TO FLAT SA-2
ACF ..... STRAIGHT BOLT/CABLE TO FLAT SA-1
AFTF ..... EXPANSION TERMINAL, TUBE TO FLAT SA-5
ASTF ..... STRAIGHT BOLT TERMINAL, TUBE TO FLAT SA-3

BOLTED/BRONZE

FSTFLG ..... EXPANSION TERMINAL, TUBE TO FLAT SA-19
SPTP ..... STRAIGHT BOLT TERMINAL, CABLE OR TUBE TO FLAT SA-9
STF4 ..... STRAIGHT BOLT TERMINAL, TUBE TO FLAT SA-18
SWH ..... STRAIGHT BOLT TERMINAL, CABLE TO FLAT SA-11
SWHD ..... STRAIGHT BOLT TERMINAL, TWO CABLES TO FLAT SA-12
SWL ..... STRAIGHT BOLT TERMINAL, CABLE TO FLAT SA-10
TLD ..... TAP LUG TERMINAL, ONE OR TWO CABLES TO FLAT SA-8
TLS ..... ONE CABLE TO FLAT SA-7
TS ..... MULTI-PURPOSE CONNECTOR, CABLE, TUBE, FLAT SA-20
V ..... ADAPTER, TRANSFORMER TERMINAL TO MULTIPLE CABLE SA-21
VL2 ..... DOUBLE EYEBOLT TERMINAL, TWO CABLES TO FLAT SA-15
VL3D ..... DOUBLE EYEBOLT TERMINAL, THREE CABLES TO FLAT SA-16
VL44D ..... DOUBLE EYEBOLT TERMINAL, FOUR CABLES TO FLAT SA-17
VL4D ..... DOUBLE EYEBOLT TERMINAL, ONE OR TWO CABLES TO FLAT SA-14
VL4S ..... SINGLE EYEBOLT TERMINAL, CABLE TO FLAT SA-13

WELDMENT/ALUMINUM

W2CF ..... TWO CABLES TO FLAT SA-25
WCF ..... CABLE TO FLAT SA-23
WFTF ..... EXPANSION TERMINAL, TUBE TO FLAT SA-27
WSTF ..... TUBE TO FLAT SA-26

COMPRESSION/ALUMINUM

ACF ..... CABLE TO FLAT SA-28
CCLS ..... SHORT BARREL, CABLE TO FLAT SA-30

COPPER

BCL ..... CABLE TO FLAT SA-33

TERMINALS
BOLTED ALUMINUM
STRAIGHT BOLT/CABLE TO FLAT

ALUMINUM

ACF

SA 1

Aluminum alloy terminal for connecting aluminum cable to aluminum or copper flat pad combinations. Side formed tongues are standard to allow clearance for flush mounting. Clamping bolts have hex-stops for one-wrench installation. Tongue holes have NEMA spacing. Contact sealant is recommended.

Material: **Castings**—356-T6 aluminum alloy
Clamping Hardware—aluminum alloy

45° & 90° Angle connectors may be obtained by specifying desired angle. **Example:** ACF11B2Y90

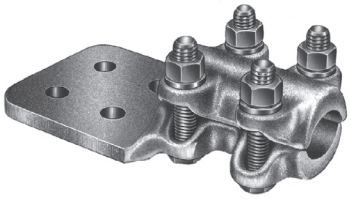

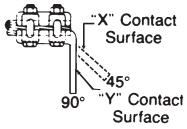

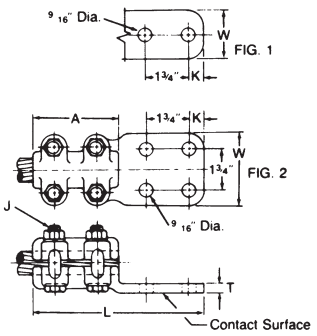

Product Data & Conductor Size

CATALOG NUMBER	FIG. NO.	CONDUCTOR RANGE AAC	CONDUCTOR RANGE ACSR	CABLE DIA. INCHES (MM)	DIMENSIONS INCHES (MM) L	A	K	T	W	J	APPROX. WT. EACH LBS. (KG)
*ACF6B	1	#4–250 MCM	#4–4/0 Str.	.232–.575 (5.89-14.6)	6 (152.4)	3 (76.2)	5/8 (15.88)	5/16 (7.94)	1-1/2 (38.1)	1/2 (12.7)	1.0 (.45)
*ACF6B2	1				6 (152.4)	3 (76.2)	5/8 (15.88)	5/16 (7.94)	2 (50.8)	1/2 (12.7)	1.0 (.45)
*ACF6C	2				6 (152.4)	3 (76.2)	5/8 (15.88)	5/16 (7.94)	3 (76.2)	1/2 (12.7)	1.1 (.50)
ACF7B	1	250–400 MCM	4/0–336 MCM	.563–.744 (14.3-18.9)	6 (152.4)	3 (76.2)	5/8 (15.88)	5/16 (7.94)	1-1/2 (38.1)	1/2 (12.7)	1.0 (.45)
ACF7B2	1				6 (152.4)	3 (76.2)	5/8 (15.88)	5/16 (7.94)	2 (50.8)	1/2 (12.7)	1.0 (.45)
ACF7C	2				6 (152.4)	3 (76.2)	5/8 (15.88)	5/16 (7.94)	3 (76.2)	1/2 (12.7)	1.1 (.50)
ACF9B2	1	350–600 MCM	336–477 MCM	.681–.893 (17.3-22.68)	6-1/4 (158.75)	3-1/4 (82.55)	5/8 (15.88)	3/8 (9.52)	2 (50.8)	1/2 (12.7)	1.2 (.54)
ACF9C	2				6-1/4 (158.75)	3-1/4 (82.55)	5/8 (15.88)	3/8 (9.52)	3 (76.2)	1/2 (12.7)	1.4 (.64)
ACF11B2	1	600–900 MCM	556.5–795 MCM	.870–1.108 (22.1-28.14)	6-1/2 (165.1)	3-1/2 (88.9)	5/8 (15.88)	3/8 (9.52)	2 (50.8)	5/8 (15.88)	1.4 (.64)
ACF11C	2				6-1/2 (165.1)	3-1/2 (88.9)	5/8 (15.88)	3/8 (9.52)	3 (76.2)	1/2 (12.7)	1.5 (.68)
ACF13B2	1	900–1250 MCM	715–1113 MCM	1.081–1.293 (27.46-32.84)	6-7/8 (174.6)	3-3/4 (95.25)	5/8 (15.88)	3/8 (9.52)	2 (50.8)	1/2 (12.7)	1.6 (.72)
ACF13C	2				7-1/8 (181.0)	3-3/4 (95.25)	5/8 (15.88)	3/8 (9.52)	3 (76.2)	1/2 (12.7)	1.7 (.77)
ACF13D	2				7-3/4 (196.85)	3-3/4 (95.25)	1-1/8 (28.58)	3/8 (9.52)	4 (101.6)	1/2 (12.7)	2.1 (.95)
ACF15C	2	1250–1600 MCM	1113–1272 MCM	1.289–1.459 (32.74-37.06)	7-1/4 (184.15)	4-1/4 (107.95)	5/8 (15.88)	5/8 (15.88)	3 (76.2)	5/8 (15.88)	2.8 (1.27)
ACF15D	2				8-1/4 (209.55)	4-1/4 (107.95)	1-1/8 (28.58)	1/2 (12.7)	4 (101.6)	5/8 (15.88)	3.1 (1.4)
ACF16C	2	1500–2000 MCM	1272–1780 MCM	1.382–1.632 (35.10-41.45)	7-1/2 (190.5)	4-1/2 (114.3)	5/8 (15.88)	7/16 (11.11)	3 (76.2)	5/8 (15.88)	3.0 (1.36)
ACF16D	2				8-1/2 (215.9)	4-1/2 (114.3)	1-1/8 (28.58)	7/16 (11.11)	4 (101.6)	5/8 (15.88)	3.3 (1.50)
†ACF18D	2	2000–2500 MCM	2034–2312 MCM	1.632–1.824 (41.45-46.33)	10-3/4 (273.05)	6-3/4 (171.45)	1-1/8 (28.58)	5/8 (15.88)	4 (101.6)	5/8 (15.88)	5.1 (2.31)

** Furnished with reversible cable caps.*
† Furnished with six clamping bolts.

TERMINALS
BOLTED ALUMINUM STRAIGHT BOLT LUG, TWO CABLES TO FLAT

ALUMINUM

A2CF

SA 2

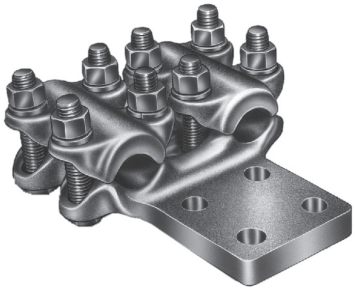

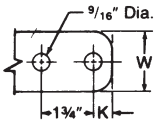

FIG. 1

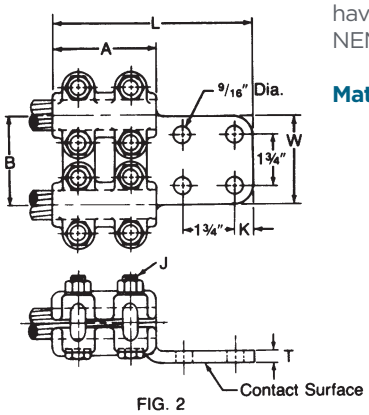

FIG. 2

Aluminum alloy terminal for connecting two aluminum cables to aluminum or copper flat pad combinations. Side formed tongues are standard to allow clearance for flush mounting. Clamping bolts have hex-stops for one-wrench installation. Tongue holes have NEMA spacing. Contact sealant is recommended.

Material: **Castings**—356-T6 aluminum alloy
Clamping Hardware—aluminum alloy

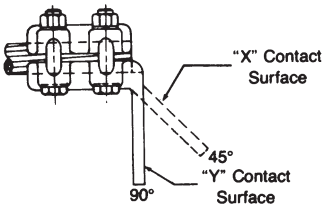

Product Data & Conductor Size

CATALOG NUMBER	FIG. NO.	CONDUCTOR RANGE AAC	CONDUCTOR RANGE ACSR	CONDUCTOR RANGE CABLE DIA. INCHES (MM)	DIMENSIONS INCHES (MM) L	A	K	T	W	B	J	APPROX. WT. EACH LBS. (KG)
*A2CF6B2	1	#4-250 MCM	#4-4/0	.232-.575 (5.89-14.6)	6-1/8 (155.58)	3 (76.2)	5/8 (15.88)	15/32 (11.91)	2 (50.8)	2-9/16 (65.09)	1/2 (12.7)	1.7 (.8)
*A2CF6C	2				6-1/8 (155.58)	3 (76.2)	5/8 (15.88)	15/32 (11.91)	3 (76.2)	2-9/16 (65.09)	1/2 (12.7)	2.0 (.9)
A2CF7B2	1	250-400 MCM	4/0-336	.563-.744 (14.3-18.9)	6-1/8 (155.58)	3 (76.2)	5/8 (15.88)	1/2 (12.7)	2 (50.8)	2-9/16 (65.09)	1/2 (12.7)	2.1 (1.0)
A2CF7C	2				6-1/4 (158.75)	3 (76.2)	5/8 (15.88)	9/16 (14.29)	3 (76.2)	2-13/16 (71.44)	1/2 (12.7)	2.3 (1.04)
A2CF9B2	1	350-600 MCM	336-477	.681-.893 (17.3-22.68)	6-3/8 (161.92)	3-1/4 (82.55)	5/8 (15.88)	9/16 (14.29)	2 (50.8)	2-13/16 (71.44)	1/2 (12.7)	2.4 (1.1)
A2CF9C	2				6-3/8 (161.92)	3-1/4 (82.55)	5/8 (15.88)	9/16 (14.29)	3 (76.2)	2-13/16 (71.44)	1/2 (12.7)	2.6 (1.2)
A2CF11B2	1	600-900 MCM	556-795	.870-1.108 (22.1-28.14)	6-5/8 (168.28)	3-1/2 (88.9)	5/8 (15.88)	5/8 (15.88)	2 (50.8)	3-1/16 (77.79)	1/2 (12.7)	2.6 (1.2)
A2CF11C	2				6-3/4 (171.45)	3-1/2 (88.9)	5/8 (15.88)	5/8 (15.88)	3 (76.2)	3-1/16 (77.79)	1/2 (12.7)	2.9 (1.3)
A2CF11D	2				7-3/4 (196.85)	3-1/2 (88.9)	1-1/8 (28.58)	5/8 (15.88)	4 (101.6)	3-1/16 (77.79)	1/2 (12.7)	3.2 (1.45)
A2CF13C	2	900-1250 MCM	715-1113	1.081-1.293 (27.46-32.84)	7 (177.8)	3-3/4 (95.25)	5/8 (15.88)	5/8 (15.88)	3 (76.2)	3-5/16 (84.14)	1/2 (12.7)	3.3 (1.5)
A2CF13D	2				8 (203.2)	3-3/4 (95.25)	1-1/8 (28.58)	5/8 (15.88)	4 (101.6)	3-5/16 (84.14)	1/2 (12.7)	3.6 (1.7)
A2CF15C	2	1250-1600 MCM	1113-1272	1.289-1.459 (32.74-37.06)	7-1/2 (190.5)	4-1/4 (107.95)	1-1/8 (28.58)	21/32 (16.67)	3 (76.2)	3-13/16 (96.84)	5/8 (15.88)	5.2 (2.4)
A2CF15D	2				8-5/8 (219.08)	4-1/4 (107.95)	1-1/8 (28.58)	5/8 (15.88)	4 (101.6)	3-13/16 (96.84)	5/8 (15.88)	5.8 (2.6)
A2CF16C	2	1500-2000 MCM	1272-1780	1.382-1.632 (35.1-41.45)	7-5/8 (193.68)	4-1/2 (114.3)	1-1/8 (28.58)	21/32 (16.67)	3 (76.2)	4 1/16 (103.19)	5/8 (15.88)	6.0 (2.7)
A2CF16D	2				8-7/8 (225.42)	4-1/2 (114.3)	1-1/8 (28.58)	7/8 (22.22)	4 (101.6)	4 1/16 (103.19)	5/8 (15.88)	6.9 (3.1)
A2CF18D	2	2000-2500 MCM	2034-2312	1.632-1.824 (41.45-46.33)	8-3/4 (222.25)	4-3/8 (111.12)	1-1/8 (28.58)	1 (25.4)	4 (101.6)	4 1/16 (103.19)	5/8 (15.88)	7.9 (4.1)

** Furnished with reversible cable caps.*

TERMINALS BOLTED ALUMINUM STRAIGHT BOLT TERMINAL, TUBE TO FLAT

ALUMINUM

ASTF

SA 3

Aluminum alloy terminal for connecting aluminum tubing to aluminum or copper flat pad combinations. Side formed tongues are standard to allow clearance for flush mounting. Clamping bolts have hex-stops for one-wrench installation. Tongue holes have NEMA spacing. Contact sealant is recommended.

Material: **Castings**—356-T6 aluminum alloy
Hardware—aluminum alloy

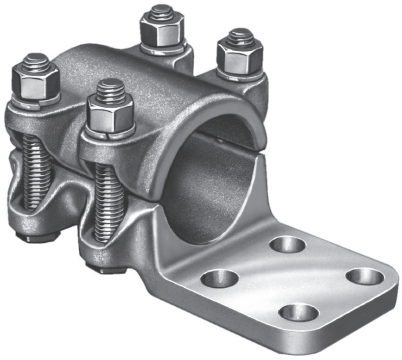

Center formed pads may be obtained by adding suffix-CF to the catalog number.
Example: ASTF20B2CF

45° & 90° angle connectors may be obtained by specifying desired angle.
Example: ASTF20B2Y90

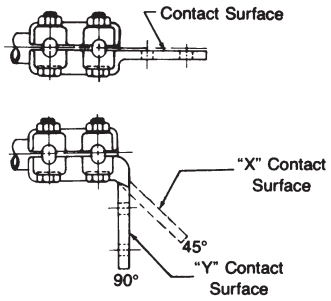

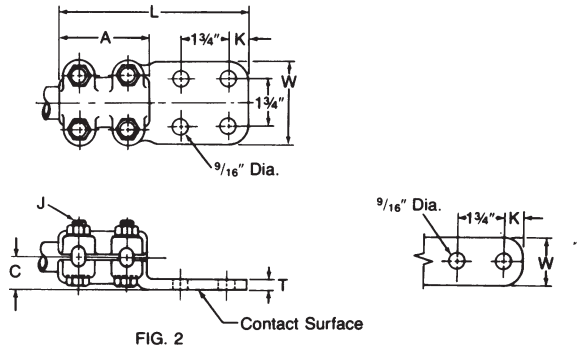

FIG. 2

Product Data & Conductor Size

CATALOG NUMBER	FIG. NO.	CONDUCTOR SIZE TUBING IPS/EHIPS	DIMENSIONS INCHES (MM)							APPROX. WT. EACH LBS. (KG)
			L	A	C	K	T	W	J	
ASTF06B2	1	3/4	5-7/8 (149.2)	2-1/2 (63.5)	1-3/8 (34.92)	5/8 (15.88)	1/2 (12.7)	2 (50.8)	1/2 (12.7)	1.2 (.5)
ASTF06C	2	3/4	5-3/4 (146.05)	2-1/2 (63.5)	1-3/8 (34.92)	5/8 (15.88)	3/8 (9.52)	3 (76.2)	1/2 (12.7)	1.2 (.5)
ASTF10B2	1	1	6-1/8 (155.6)	2-3/4 (69.85)	1-3/8 (34.92)	5/8 (15.88)	1/2 (12.7)	2 (50.8)	1/2 (12.7)	1.5 (.7)
ASTF10C	2	1	6 (152.4)	2-3/4 (69.85)	1-3/8 (34.92)	5/8 (15.88)	3/8 (9.52)	3 (76.2)	1/2 (12.7)	1.5 (.7)
ASTF12B2	1	1-1/4	6-1/4 (158.75)	3 (76.2)	1-5/8 (41.28)	5/8 (15.88)	3/8 (9.52)	2 (50.8)	1/2 (12.7)	1.6 (.7)
ASTF12C	2	1-1/4	6-1/4 (158.75)	3 (76.2)	1-5/8 (41.28)	5/8 (15.88)	3/8 (9.52)	3 (76.2)	1/2 (12.7)	1.6 (.7)
ASTF14B2	1	1-1/2	6-1/2 (165.1)	3-1/4 (82.55)	1-1/2 (38.1)	5/8 (15.88)	7/16 (11.11)	2 (50.8)	1/2 (12.7)	1.7 (.8)
ASTF14C	2	1-1/2	6-1/2 (165.1)	3-1/4 (82.55)	1-1/2 (38.1)	5/8 (15.88)	1/2 (12.7)	3 (76.2)	1/2 (12.7)	1.9 (.9)
ASTF20B2	1	2	6-7/8 (174.6)	3-1/2 (88.9)	1-3/4 (44.45)	5/8 (15.88)	7/16 (11.11)	2 (50.8)	1/2 (12.7)	2.0 (.9)
ASTF20C	2	2	6-7/8 (174.6)	3-1/2 (88.9)	1-3/4 (44.45)	5/8 (15.88)	7/16 (11.11)	3 (76.2)	1/2 (12.7)	2.2 (1.0)
ASTF20D	2	2	7-3/4 (196.85)	3-1/2 (88.9)	1-3/4 (44.45)	1-1/8 (28.58)	3/8 (9.52)	4 (101.6)	1/2 (12.7)	2.4 (1.1)

Continued on next page.

TERMINALS BOLTED ALUMINUM
STRAIGHT BOLT TERMINAL, TUBE TO FLAT
(CONTINUED)

Product Data & Conductor Size

CATALOG NUMBER	FIG. NO.	CONDUCTOR SIZE TUBING IPS/EHIPS	DIMENSIONS INCHES (MM)							APPROX. WT. EACH LBS. (KG)
			L	A	C	K	T	W	J	
ASTF24B2	1	2-1/2	7-1/8 (181.0)	3-3/4 (95.25)	2-1/4 (57.15)	5/8 (15.88)	9/16 (14.29)	2 (50.8)	5/8 (15.88)	3.0 (1.4)
ASTF24C	2	2-1/2	7-1/4 (184.15)	3-3/4 (95.25)	2-1/4 (57.15)	5/8 (15.88)	9/16 (14.29)	3 (76.2)	5/8 (15.88)	3.3 (1.5)
ASTF24D	2	2-1/2	8 (203.2)	3-3/4 (95.25)	2-1/4 (57.15)	1-1/8 (28.58)	9/16 (14.29)	4 (101.6)	5/8 (15.88)	3.4 (1.5)
ASTF30C	2	3	7-9/16 (192.1)	4 (101.6)	2-3/8 (60.33)	5/8 (15.88)	5/8 (15.88)	3 (76.2)	5/8 (15.88)	4.3 (1.9)
ASTF30D	2	3	8-9/16 (217.5)	4 (101.6)	2-3/8 (60.33)	1-1/8 (28.58)	5/8 (15.88)	4 (101.6)	5/8 (15.88)	4.7 (2.1)
ASTF34C	2	3-1/2	7-3/4 (196.85)	4-1/4 (107.95)	3-1/4 (82.55)	5/8 (15.88)	3/4 (19.05)	3 (76.2)	5/8 (15.88)	4.2 (1.9)
ASTF34D	2	3-1/2	8-5/8 (219.1)	4-1/4 (107.95)	3-1/4 (82.55)	1-1/8 (28.58)	5/8 (15.88)	4 (101.6)	5/8 (15.88)	4.5 (2.1)
ASTF40C	2	4	7-3/4 (196.85)	4-1/4 (107.95)	3-1/2 (88.9)	5/8 (15.88)	3/4 (19.05)	3 (76.2)	5/8 (15.88)	4.9 (2.2)
ASTF40D	2	4	8-1/2 (215.9)	4-1/4 (107.95)	3-1/2 (88.9)	1-1/8 (28.58)	3/4 (19.05)	4 (101.6)	5/8 (15.88)	5.6 (2.5)
ASTF50D	2	5	10-1/4 (260.35)	5 (127.0)	3-9/10 (98.42)	1-1/8 (28.58)	1 (25.4)	4 (101.6)	5/8 (15.88)	8.4 (3.8)
ASTF60D	2	6	10-3/4 (273.05)	6 (152.4)	4-3/8 (111.12)	1-1/8 (28.58)	1 (25.4)	4 (101.6)	5/8 (15.88)	10.1 (4.6)

TERMINALS
BOLTED ALUMINUM
EXPANSION TERMINAL, TUBE TO FLAT

ALUMINUM

AFTF

SA 5

Aluminum laminated bolted expansion terminal for aluminum tubing to aluminum or copper flat pad. Designed for +/-2 inch expansion on tubing larger than 2" I.P.S. Guides and laminations are proper size for use with standard schedule 40 IPS tubing. Clamping bolts have hex-stops for one-wrench installation. Tongue holes have NEMA spacing. Contact sealant is recommended.

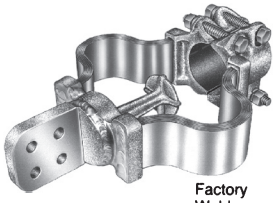

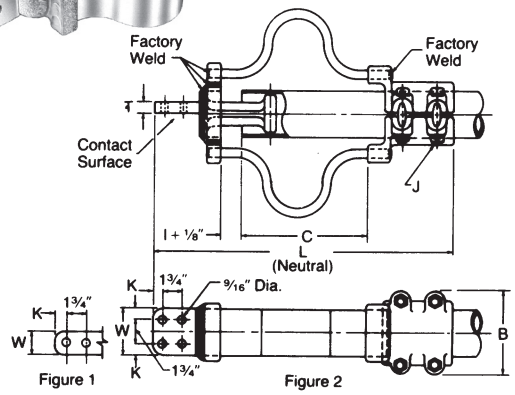

Material: **Castings**—356-T6 aluminum alloy
Factory formed laminated shunts—aluminum
Clamping hardware—aluminum alloy

Notes: (1)To specify extra heavy (schedule 80, EHIPS) tubing, add "H" to catalog number. **Example:** AFTFH40D
(2)To obtain pad rotated 90 degrees, add "V" to catalog number. **Example:** AFTFV30D

90° Rotated Pad
AFTFV-

Refer to chart DC-9295 on page SA-6 for installation instructions.

Product Data & Conductor Size

CATALOG NUMBER	FIG. NO.	CONDUCTOR SIZE TUBING IPS ◊◊	DIMENSIONS INCHES (MM) L	C	K	T	W	B	J	APPROX. WT. EACH LBS. (KG)
AFTF10B2	1	1	15 (38.10)	4-3/4 (120.65)	5/8 (15.88)	3/4 (19.05)	2 (50.8)	3-1/4 (82.55)	1/2 (12.7)	5.1 (2.3)
AFTF10C	2	1	15-1/4 (387.35)	4-3/4 (120.65)	5/8 (15.88)	5/8 (15.88)	3 (76.2)	3-1/4 (82.55)	1/2 (12.7)	5.1 (2.3)
AFTF12B2	1	1-1/4	15-3/4 (400.05)	4-5/8 (117.48)	5/8 (15.88)	3/8 (9.52)	2 (50.8)	3-5/8 (92.08)	1/2 (12.7)	5.2 (2.36)
AFTF12C	2	1-1/4	15-3/4 (400.05)	4-5/8 (117.48)	5/8 (15.88)	5/8 (15.88)	3 (76.2)	3-5/8 (92.08)	1/2 (12.7)	5.3 (2.4)
AFTF14B2	1	1-1/2	15-7/8 (403.22)	4-5/8 (117.48)	5/8 (15.88)	1/2 (12.7)	2 (50.8)	3-3/16 (98.64)	1/2 (12.7)	5.4 (2.45)
AFTF14C	2	1-1/2	15-7/8 (403.22)	4-5/8 (117.48)	5/8 (15.88)	1/2 (12.7)	3 (76.2)	3-13/16 (96.84)	1/2 (12.7)	5.6 (2.54)
AFTF20B2	1	2	15-15/16 (404.81)	4-1/2 (114.3)	5/8 (15.88)	1/2 (12.7)	2 (50.8)	4-5/16 (109.54)	1/2 (12.7)	6.1 (2.77)
AFTF20C	2	2	15-15/16 (404.81)	4-1/2 (114.3)	5/8 (15.88)	1/2 (12.7)	3 (76.2)	4-5/16 (109.54)	1/2 (12.7)	6.3 (2.86)
AFTF24B2	1	2-1/2	15-5/8 (396.87)	4-5/8 (117.48)	5/8 (15.88)	5/8 (15.88)	2 (50.8)	5-3/16 (131.76)	5/8 (15.88)	9.2 (4.17)
AFTF24C	2	2-1/2	15-5/8 (396.87)	4-11/16 (119.06)	5/8 (15.88)	5/8 (15.88)	3 (76.2)	5-3/16 (131.76)	5/8 (15.88)	9.4 (4.26)
AFTF24D	2	2-1/2	16-5/8 (422.28)	4-5/8 (117.48)	1-1/8 (28.58)	1/2 (12.7)	4 (101.60)	5-3/16 (131.76)	5/8 (15.88)	9.6 (4.35)
AFTF30D	2	3	17-13/16 (452.44)	4-7/8 (123.82)	1-1/8 (28.58)	5/8 (15.88)	4 (101.60)	5-13/16 (147.64)	5/8 (15.88)	11.4 (5.17)
AFTF34D	2	3-1/2	17-3/4 (450.85)	4-5/8 (117.48)	1-1/8 (28.58)	3/4 (19.05)	4 (101.60)	6-5/16 (160.34)	5/8 (15.88)	12.3 (5.58)
AFTF40D	2	4	18 (457.2)	4-7/8 (123.82)	1-1/8 (28.58)	7/8 (22.22)	4 (101.60)	6-15/16 (176.21)	5/8 (15.88)	14.4 (6.53)
AFTF50D	2	5	19-3/8 (492.12)	5-1/8 (130.18)	1-1/8 (28.58)	1 (25.4)	4 (101.60)	7-15/16 (201.61)	5/8 (15.88)	20.2 (9.16)
AFTF60D	2	6	20-5/8 (523.88)	5-3/8 (130.18)	1-1/8 (28.58)	1 (25.4)	4 (101.60)	9-1/16 (230.19)	5/8 (15.88)	24.8 (11.25)

◊◊ 140 ft. maximum total bus length.

INSTALLATION CHART
DC-9295

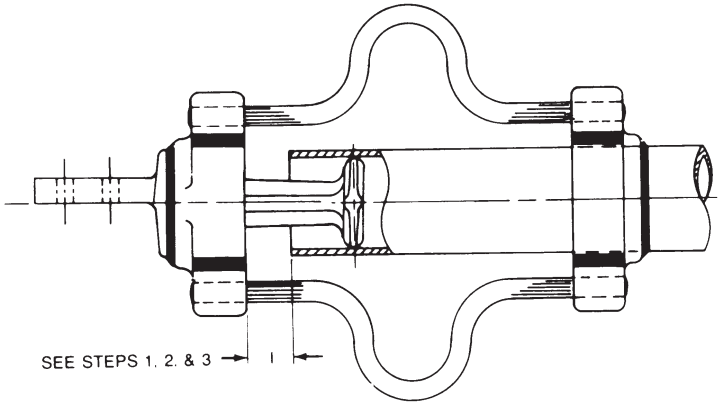

TYPICAL FLEXIBLE TERMINAL

TYPES AFTF AND WFTF

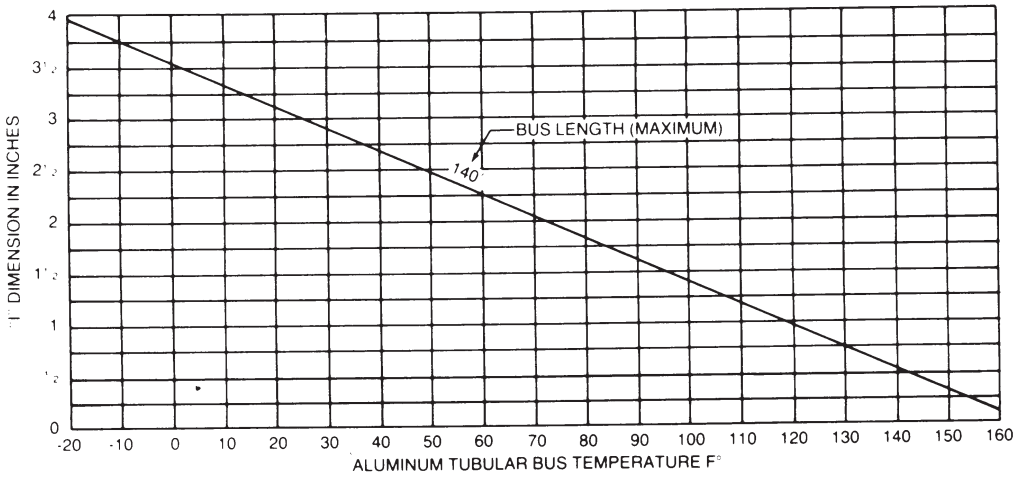

HOW TO USE CHART

1. Determine tubular bus temperature and locate on temperature scale.
2. Using 140 ft. bus length, locate the intersection of the bus length and the temperature reading.
3. Read "l" dimensions setting from this intersection point.
4. Total tubular bus length must not exceed 140 feet.

TERMINALS BRONZE BOLTED TAP LUG TERMINAL ONE CABLE TO FLAT

BRONZE
TLS

SA 7

Bronze alloy terminal for connecting a copper cable directly to a flat copper pad. Recommended for power or grounding applications.

Material: **Castings**—Bronze alloy
Eyebolt—High strength bronze
Hardware—Stainless steel

Note: For copper cable connection to aluminum bus bar, specify tin-plated terminal with Belleville spring washer by adding suffix TPBW to catalog number. **Example:** TLS62LTPBW

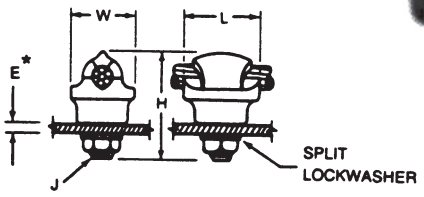

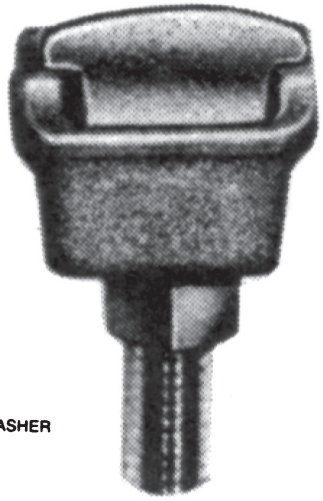

Product Data & Conductor Size

CATALOG NUMBER	COPPER CONDUCTOR RANGE		DIMENSIONS INCHES (MM)					APPROX. WT. EACH LBS. (KG)
	CABLE	CABLE DIAMETER INCHES (MM)	L	H	W	J	E*	
TLS22	#10 Sol.-#1 Str.	.102-.332 (2.59-8.43)	1-1/8 (28.58)	1-15/16 (49.21)	7/8 (22.22)	3/8 (9.52)	1/4 (6.35)	.20 (.10)
TLS22L	#10 Sol.-#1 Str.	.102-.332 (2.59-8.43)	1-1/8 (28.58)	2-7/16 (61.91)	7/8 (22.22)	3/8 (9.52)	3/4 (19.05)	.22 (.11)
TLS32	#8 Sol.-2/0 Str.	.128-.419 (3.25-10.64)	1-1/2 (38.1)	2-3/8 (60.32)	1-1/8 (28.58)	1/2 (12.7)	1/2 (6.35)	.30 (.14)
TLS32L	#8 Sol.-2/0 Str.	.128-.419 (3.25-10.64)	1-1/2 (38.1)	2-7/8 (73.02)	1-1/16 (26.99)	1/2 (12.7)	3/4 (19.05)	.34 (.15)
TLS35	#8 Sol.-2/0 Str.	.128-.419 (3.25-10.64)	1-1/4 (31.75)	2 (50.8)	1-1/16 (26.99)	3/8 (9.52)	1/4 (6.35)	.20 (.10)
TLS42	#6 Sol.-250 MCM	.162-.575 (4.11-14.60)	1-1/2 (38.1)	2-5/8 (66.68)	1-1/4 (31.75)	1/2 (12.7)	1/4 (6.35)	.43 (.20)
TLS42L	#6 Sol.-250 MCM	.162-.575 (4.11-14.60)	1-1/2 (38.1)	3-1/8 (79.38)	1-5/16 (33.34)	1/2 (12.7)	3/4 (19.05)	.46 (.21)
TLS52	#2 Sol.-350 MCM	.258-.681 (6.55-17.30)	1-11/16 (42.86)	2-3/4 (69.85)	1-5/16 (33.34)	1/2 (12.7)	1/4 (6.35)	.50 (.23)
TLS52L	#2 Sol.-350 MCM	.258-.681 (6.55-17.30)	1-11/16 (42.86)	3-1/4 (82.55)	1-5/16 (33.34)	1/2 (12.7)	3/4 (19.05)	.54 (.24)
TLS62	1/0 Sol.-500 MCM	.325-.813 (8.26-20.65)	1-11/16 (42.86)	3-1/16 (77.79)	1-9/16 (39.69)	1/2 (12.7)	1/4 (6.35)	.50 (.23)
TLS62L	1/0 Sol.-500 MCM	.325-.813 (8.26-20.65)	1-11/16 (42.86)	3-9/16 (90.49)	1-1/2 (38.10)	1/2 (12.7)	3/4 (19.05)	.54 (.25)
TLS89	2/0 Sol.-1000 MCM	.365-1.152 (9.27-29.26)	1-11/16 (42.86)	3-9/16 (90.49)	1-3/4 (44.45)	1/2 (12.7)	1/4 (6.35)	.79 (.36)
TLS89L	2/0 Sol.-1000 MCM	.365-1.152 (9.27-29.26)	1-11/16 (42.86)	4-3/8 (111.12)	1-3/4 (44.45)	1/2 (12.7)	3/4 (19.05)	.83 (.38)

** Eyebolt is of sufficient length to bolt through a maximum of 1/4" or 3/4" thickness for parts with the 'L' suffix.*

BRONZE

TLD

TERMINALS
BRONZE BOLTED TAP LUG TERMINAL
ONE OR TWO CABLES TO FLAT

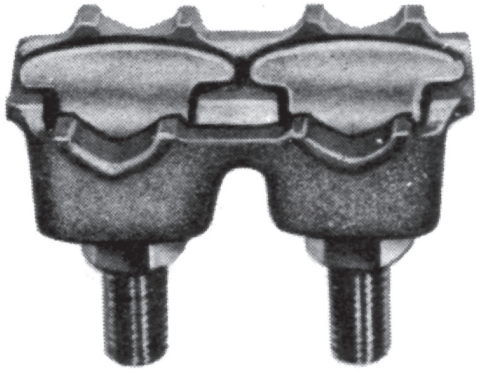

Bronze alloy terminal for connecting one or two copper cables directly to a flat copper pad. Recommended for power or grounding applications.

Material: **Castings**—Bronze alloy
Eyebolt—High strength bronze
Hardware—Stainless steel

Notes: Sizes TLD32 through TLD89, can be tandem mounted side by side on NEMA 1 3/4" hole centers drilled for 1/2" bolts.

For copper cable connection to aluminum bus bar, specify tin-plated terminal with Belleville spring washer by adding suffix TPBW to catalog number.
Example: TLD62LTPBW

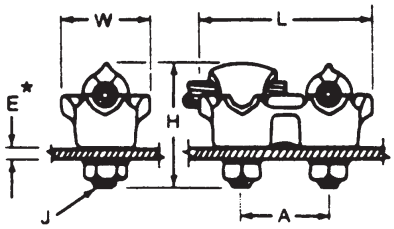

TWO WAY CUP FURNISHED THROUGH THE TLD32 SIZE.

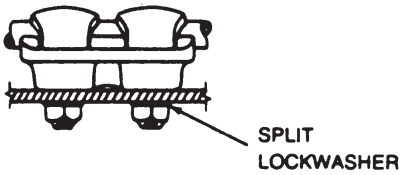

ONE WAY CUP FURNISHED ON TLD52 SIZE AND ABOVE

Product Data & Conductor Size

CATALOG NUMBER	COPPER CONDUCTOR RANGE		DIMENSIONS INCHES (MM)						APPROX. WT. EACH LBS. (KG)
	CABLE	CABLE DIAMETER INCHES (MM)	L	A	H	W	J	E*	
TLD32	#8 Sol.-2/0 Str.	.128-.419 (3.25-10.64)	3-1/4 (82.55)	1-3/4 (44.45)	2-3/8 (60.32)	1-1/2 (38.1)	1/2 (12.7)	1/4 (6.35)	.90 (.40)
TLD32L	#8 Sol.-2/0 Str.	.128-.419 (3.25-10.64)	3-1/4 (82.55)	1-3/4 (44.45)	2-7/8 (73.02)	1-1/2 (38.1)	1/2 (12.7)	3/4 (19.05)	.97 (.41)
TLD52	#2 Sol.-350 MCM	.258-.681 (6.55-17.30)	3-7/16 (87.31)	1-3/4 (44.45)	2-3/4 (69.85)	1-5/16 (33.34)	1/2 (12.7)	1/4 (6.35)	1.10 (.50)
TLD52L	#2 Sol.-350 MCM	.258-.681 (6.55-17.30)	3-7/16 (87.31)	1-3/4 (44.45)	3-1/4 (82.55)	1-5/16 (33.34)	1/2 (12.7)	3/4 (19.05)	1.20 (.52)
TLD62	1/0 Sol.-500 MCM	.325-.813 (8.26-20.65)	3-7/16 (87.31)	1-3/4 (44.45)	3-1/16 (77.79)	1-9/16 (39.69)	1/2 (12.7)	1/4 (6.35)	1.20 (.52)
TLD62L	1/0 Sol.-500 MCM	.325-.813 (8.26-20.65)	3-7/16 (87.31)	1-3/4 (44.45)	3-9/16 (90.49)	1-9/16 (39.69)	1/2 (12.7)	3/4 (19.05)	1.30 (.59)
TLD89	2/0 Sol.-1000 MCM	.365-1.152 (9.27-29.26)	3-7/16 (87.31)	1-3/4 (44.45)	3-9/16 (90.49)	1-3/4 (44.45)	1/2 (12.7)	1/4 (6.35)	2.0 (.94)
TLD89L	2/0 Sol.-1000 MCM	.365-1.152 (9.27-29.26)	3-7/16 (87.31)	1-3/4 (44.45)	4-3/8 (111.12)	1-3/4 (44.45)	1/2 (12.7)	3/4 (19.05)	2.1 (.95)
TLD92L	1000-1500 MCM	1.152-1.412 (29.26-35.86)	4 (101.6)	1-3/4 (44.45)	4 (101.6)	2-1/2 (63.5)	1/2 (12.7)	3/4 (19.05)	3.0 (1.4)
TLD102L	500-2000 MCM	.811-1.632 (20.60-41.45)	4 (101.6)	1-3/4 (44.45)	5-1/4 (133.35)	3 (76.2)	1/2 (12.7)	3/4 (19.05)	4.20 (1.90)

** Eyebolt is of sufficient length to bolt through a maximum of 1/4" or 3/4" thickness for parts with the 'L' suffix.*

TERMINALS
BRONZE STRAIGHT BOLT TERMINAL
CABLE OR TUBE TO FLAT

BRONZE

SPTP

SA 9

Bronze alloy terminal for connecting copper cable or tube to copper flat. Reversible cap accommodates a wide range of conductor sizes. Conductor can enter straight or at 90 degrees. Bolt spacing designed to mount on NEMA 4-hole pad.

Material: **Castings**—bronze alloy—tin plated
Hardware—stainless steel or silicon bronze

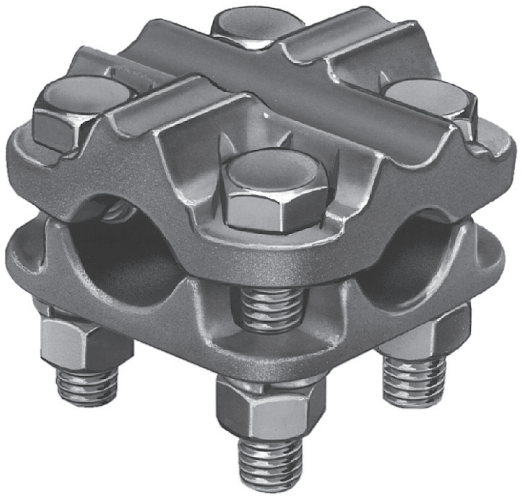

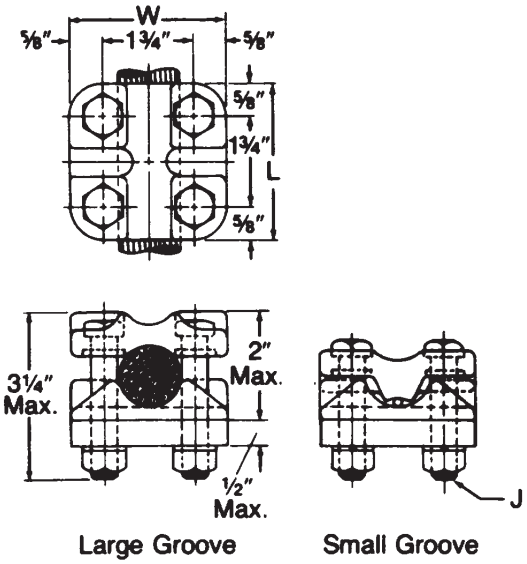

Product Data & Conductor Size

CATALOG NUMBER	COPPER CONDUCTOR RANGE			DIMENSIONS INCHES (MM)			APPROX. WT. EACH LBS. (KG)
	CABLE	CABLE DIA. INCHES (MM)	TUBING IPS	L	W	J	
SP4TP	#6 Sol.—1000 MCM	.162-1.152 (41.15-29.26)	3/8-3/4	3 (76.2)	3 (76.2)	1/2 (12.70)	2.7 (1.2)

TERMINALS
BRONZE STRAIGHT BOLT TERMINAL
CABLE TO FLAT

BRONZE
SWL

SA 10

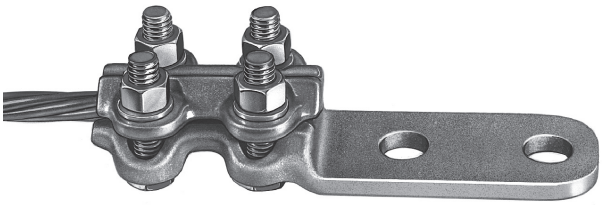

Bronze alloy terminal, with 3/8" dia. hex head clamping bolts, for connecting copper cable to copper flat. Side formed pads are standard for flush mounting. Clamping bolts have hex-stops for one-wrench installation. Tongue holes have NEMA spacing. All sizes furnished with reversible cable caps.

Material: **Castings**—bronze alloy
Clamping hardware—silicon bronze or stainless steel

45° & 90° angle connectors may be obtained by specifying desired angle.

Example: SWL050CY90

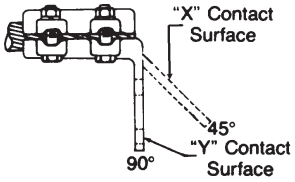

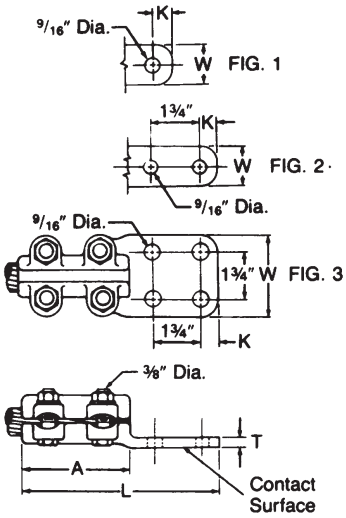

Product Data & Conductor Size

CATALOG NUMBER	FIG. NO.	COPPER CONDUCTOR RANGE			DIMENSIONS INCHES (MM)					APPROX. WT. EACH LBS. (KG)
		SMALL GROOVE	LARGE GROOVE	DIA. INCHES (MM)	L	A	K	T	W	
SWL022B	2	#6 Sol.-#2 Str.	#2 Sol.-2/0 Str.	.162-.419 (4.11-10.64)	5-3/4 (146.04)	2-1/2 (63.5)	5/8 (15.88)	1/4 (6.35)	1-1/2 (38.1)	1.5 (.7)
SWL022C	3				5-7/8 (149.22)	2-1/2 (63.5)	5/8 (15.88)	1/4 (6.35)	3 (76.2)	1.8 (.8)
SWL025B	2	#4 Sol.-1/0 Str.	2/0 Sol.-250 MCM	.204-.575 (5.18-14.60)	6-1/8 (155.58)	2-3/4 (69.85)	5/8 (15.88)	1/4 (6.35)	1-1/2 (38.1)	1.4 (.7)
SWL025C	3				6-1/8 (155.58)	2-3/4 (69.85)	5/8 (15.88)	1/4 (6.35)	3 (76.2)	2.0 (.9)
SWL050B2	2	1/0 Sol.-4/0 Str.	250-500 MCM	.325-.813 (8.25-20.65)	6-1/4 (158.75)	2-3/4 (69.85)	5/8 (15.88)	3/8 (9.52)	2 (50.8)	2.1 (1.0)
SWL050C	3				6-1/4 (158.75)	2-3/4 (69.85)	5/8 (15.88)	5/16 (7.94)	3 (76.2)	2.4 (1.1)

TERMINALS
BRONZE STRAIGHT BOLT TERMINAL
CABLE TO FLAT

BRONZE
SWH

Heavy duty, bronze alloy terminal, with 1/2" dia. hex-head clamping bolts for connecting copper cable to copper flat. Side formed pads are standard for flush mounting. Clamping bolts have hex-stops for one-wrench installation. Tongue holes have NEMA spacing. All sizes furnished with reversible cable caps.

Material: **Castings**—bronze alloy
Clamping hardware—silicon bronze or stainless steel

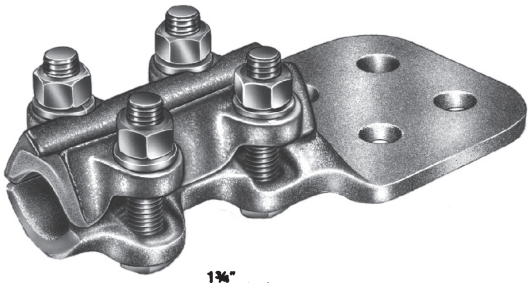

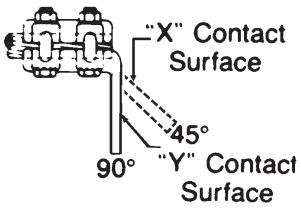

45° & 90° angle connectors may be obtained by specifying desired angle.

Example: SWH025BY90

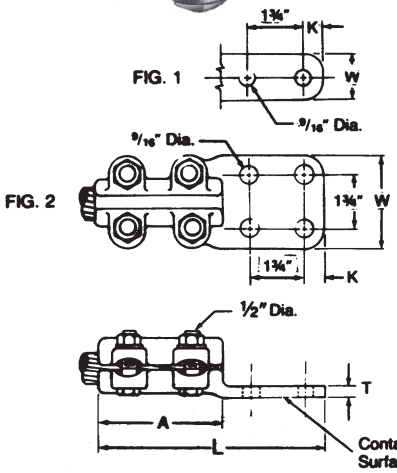

Small Groove

Large Groove

Product Data & Conductor Size

CATALOG NUMBER	FIG. NO.	COPPER CONDUCTOR RANGE			DIMENSIONS INCHES (MM)					APPROX. WT. EACH LBS. (KG)
		SMALL GROOVE	LARGE GROOVE	CABLE DIA. INCHES (MM)	L	A	K	T	W	
SWH025B	1	#4 Sol.-1/0 Str.	2/0 Str.-250 MCM	.204-.575 (5.18-14.60)	6 (152.4)	2-3/4 (69.85)	5/8 (15.88)	1/4 (6.35)	1-1/2 (38.1)	2.4 (1.1)
SWH025C	2				6 (152.4)	2-3/4 (69.85)	5/8 (15.88)	1/4 (6.35)	3 (76.2)	2.7 (2.1)
SWH050B2	1	1/0 Sol.-4/0 Str.	250-500 MCM	.325-.813 (8.26-20.65)	6 (152.4)	2-3/4 (69.85)	5/8 (15.88)	5/16 (7.94)	2 (50.8)	2.9 (1.3)
SWH050C	2				6-1/4 (158.75)	2-3/4 (69.85)	5/8 (15.88)	1/4 (6.35)	3 (76.2)	2.8 (1.3)
SWH080B2	1	2/0 Sol.-500 MCM	500-800 MCM	.365-1.031 (9.27-26.19)	6-1/4 (158.75)	2-3/4 (69.85)	5/8 (15.88)	3/8 (9.52)	2 (50.8)	3.2 (1.5)
SWH080C	2				7-1/4 (184.15)	4 (101.6)	5/8 (15.88)	5/16 (7.94)	3 (76.2)	4.1 (1.9)
SWH080D	2				8-1/4 (209.55)	4 (101.6)	1-1/8 (28.58)	5/16 (7.94)	4 (101.6)	6.4 (2.9)
SWH100B2	1	4/0 Str.-750 MCM	750-1000 MCM	.522-1.152 (13.26-29.76)	7-3/4 (196.85)	4-1/2 (114.3)	5/8 (15.88)	7/16 (11.11)	2 (50.8)	4.4 (2.0)
SWH100C	2				7 (177.85)	3-1/2 (88.9)	5/8 (15.88)	7/16 (11.11)	3 (76.2)	4.2 (1.9)
SWH100D	2				8-3/4 (222.25)	4-1/2 (114.3)	1-1/8 (28.58)	5/16 (7.94)	4 (101.6)	5.6 (2.5)
SWH200C	2	500-1500 MCM	1500-2000 MCM	.811-1.632 (20.60-41.45)	8-1/2 (215.9)	5-1/4 (133.35)	5/8 (15.88)	7/16 (11.11)	3 (76.2)	7.2 (3.3)
SWH200D	2				9-1/2 (241.3)	5-1/4 (133.35)	1-1/8 (28.58)	7/16 (11.11)	4 (101.6)	8.5 (3.9)

TERMINALS
BRONZE STRAIGHT BOLT TERMINAL
TWO CABLES TO FLAT

BRONZE
SWHD

SA 12

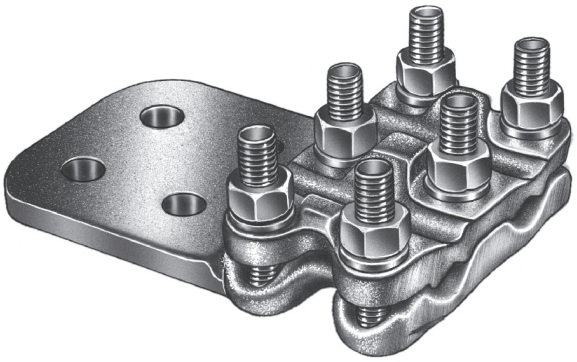

Bronze alloy terminal for connecting two copper cables of equal size to a copper flat. Tongue holes have NEMA spacing. All sizes furnished with reversible cable caps.

Material: **Castings**—bronze alloy
Clamping hardware—silicon bronze or stainless steel

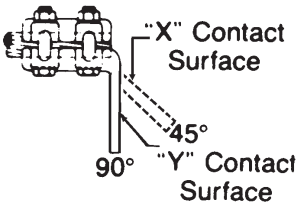

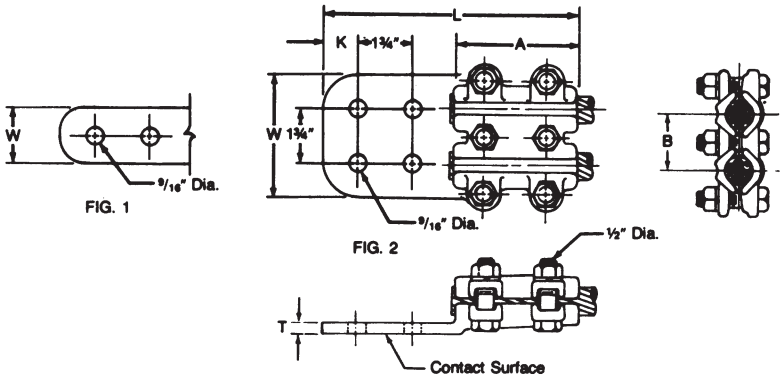

45° & 90° angle connectors may be obtained by specifying desired angle.

Example: SWHD050B2Y90

Product Data & Conductor Size

CATALOG NUMBER	FIG. NO.	COPPER CONDUCTOR RANGE			DIMENSIONS INCHES (MM)						APPROX. WT. EACH LBS. (KG)
		SMALL GROOVE	LARGE GROOVE	CABLE DIA. INCHES (MM)	L	A	K	T	W	B	
SWHD025B2	1	#4 Sol.-1/0 Str.	2/0 Sol.-250 MCM	.204-.575 (5.18-14.60)	6-1/4 (158.75)	2-1/2 (63.5)	5/8 (15.88)	5/16 (7.94)	2 (50.8)	1-1/4 (31.75)	3.7 (1.7)
SWHD025C	2				6-1/4 (158.75)	2-1/2 (63.5)	5/8 (15.88)	5/16 (7.94)	3 (76.2)	1-1/4 (31.75)	4.1 (1.9)
SWHD050B2	1	1/0 Sol.-4/0 Str.	250-500 MCM	.325-.813 (8.26-20.65)	6-3/8 (161.92)	2-3/4 (69.85)	5/8 (15.88)	1/2 (12.7)	2 (50.8)	3-7/8 (98.42)	5.1 (2.3)
SWHD050C	2				6-3/8 (161.92)	2-3/4 (69.85)	5/8 (15.88)	1/2 (12.7)	3 (76.2)	1-3/8 (34.92)	5.4 (2.4)
SWHD050D	2				7-1/2 (190.5)	2-3/4 (69.85)	1-1/8 (28.58)	1/2 (12.7)	4 (101.6)	1-3/8 (34.92)	6.6 (3.0)
SWHD100D	2	4/0 Str.-750 MCM	750-1000 MCM	.522-1.152 (13.26-29.26)	7-1/4 (184.15)	2-3/4 (69.85)	1-1/8 (28.58)	1/2 (12.7)	4 (101.6)	1-7/8 (47.62)	6.8 (3.1)
SWHD200D	2	500-1500 MCM	1500-2000 MCM	.811-1.632 (20.60-41.45)	9-3/4 (247.65)	5-1/4 (133.35)	1-1/8 (28.58)	3/4 (19.05)	4 (101.6)	2-1/4 (57.15)	7.6 (3.4)

TERMINALS
BRONZE SINGLE EYEBOLT TERMINAL
CABLE TO FLAT

BRONZE
VL4S

Bronze single eyebolt terminal for connecting copper cable to copper flat. Side formed pads are standard for flush mounting.

Material: **Castings**—bronze alloy
Eyebolt—high strength bronze
Hardware— silicon bronze or stainless steel

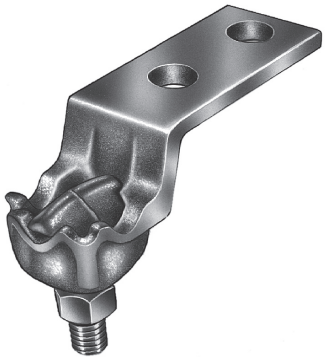

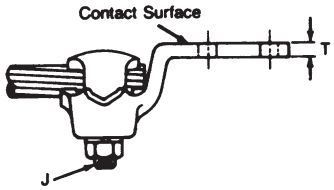

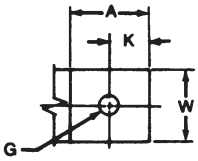

FIG. 1

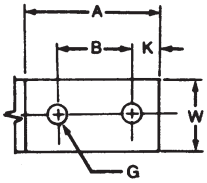

FIG. 2

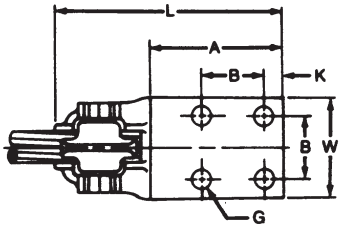

FIG. 3

Product Data & Conductor Size

CATALOG NUMBER	FIG. NO.	COPPER CONDUCTOR RANGE		DIMENSIONS INCHES (MM)								APPROX. WT. EACH LBS. (KG)
		CABLE	CABLE DIA. INCHES (MM)	L	A	B	K	T	W	J	G	
VL4S212H	1	#10 Sol.-#1 Str.	.102-.332 (2.59-8.43)	3-3/8 (85.72)	1-1/2 (38.1)	—	1/2 (12.7)	3/16 (4.76)	1 (25.4)	3/8 (9.52)	7/16 (11.11)	.4 (.2)
VL4S213H	2			3-3/4 (95.25)	2-1/2 (63.5)	1-1/8 (28.58)	1/2 (12.7)	3/16 (4.76)	1 (25.4)	3/8 (9.52)	7/16 (11.11)	.5 (.2)
VL4S341H	1	#8 Sol.-# 2/0 Str.	.128-.419 (3.25-10.64)	2-13/16 (71.44)	1-3/8 (34.92)	—	1/2 (12.7)	1/4 (6.35)	3/4 (19.05)	3/8 (9.52)	7/16 (11.11)	.4 (.2)
VL4S343H	2			4-1/16 (103.19)	2-5/8 (66.68)	1-1/8 (28.58)	1/2 (12.7)	1/4 (6.35)	1 (25.4)	3/8 (9.52)	7/16 (11.11)	1.5 (.7)
VL4S344H	2			5-1/8 (130.18)	3-5/8 (92.08)	1-3/4 (44.45)	5/8 (15.88)	1/4 (6.35)	1 (25.4)	3/8 (9.52)	9/16 (14.29)	.6 (.3)
VL4S411H	1	#6 Sol.-250 MCM	.162-.575 (4.11-14.60)	3-7/8 (98.42)	1-1/4 (31.75)	—	9/16 (14.29)	1/4 (6.35)	1-1/8 (28.58)	1/2 (12.7)	9/16 (14.29)	.9 (.4)
VL4S412H	2			3-7/8 (98.42)	2 (50.8)	1 (25.4)	1/2 (12.7)	1/4 (6.35)	1-1/4 (31.75)	1/2 (12.7)	7/16 (11.11)	.8 (.3)
VL4S414H	2			5-1/4 (133.35)	3-5/8 (92.06)	1-3/4 (44.45)	5/8 (15.88)	1/4 (6.35)	1-5/8 (41.28)	1/2 (12.7)	9/16 (14.29)	1.2 (.5)
VL4S571H	1	#2 Sol.-350 MCM	.258-.681 (6.55-17.30)	3-7/16 (87.31)	1-1/2 (38.1)	—	5/8 (15.88)	1/4 (6.35)	1-1/8 (28.58)	1/2 (12.7)	9/16 (14.29)	1.0 (.5)
VL4S574H	2			5-5/8 (142.88)	3-5/8 (92.08)	1-3/4 (44.45)	5/8 (15.88)	1/4 (6.35)	1-5/8 (41.28)	1/2 (12.7)	9/16 (14.29)	1.3 (.6)
*VL4S611H	2	1/0 Sol.-500 MCM	.325-.813 (8.26-20.65)	4-7/8 (123.82)	2-1/4 (57.15)	1-1/8 (28.58)	1/2 (12.7)	1/4 (6.35)	1-1/4 (31.75)	1/2 (12.7)	7/16 (11.11)	1.9 (.9)
*VL4S613H	2			5-7/8 (149.22)	3-5/8 (92.08)	1-3/4 (44.45)	5/8 (15.88)	1/4 (6.35)	1-5/8 (41.28)	1/2 (12.7)	9/16 (14.29)	1.6 (.7)
*VL4S614H	2			5-11/16 (144.46)	3-1/4 (82.55)	1-3/4 (44.45)	5/8 (15.88)	1/4 (6.35)	3 (76.2)	1/2 (12.7)	9/16 (14.29)	2.3 (1.0)

** Cable entrance only from end of terminal.*

TERMINALS
BRONZE DOUBLE EYEBOLT TERMINAL
ONE OR TWO CABLES TO FLAT

BRONZE

VL4D

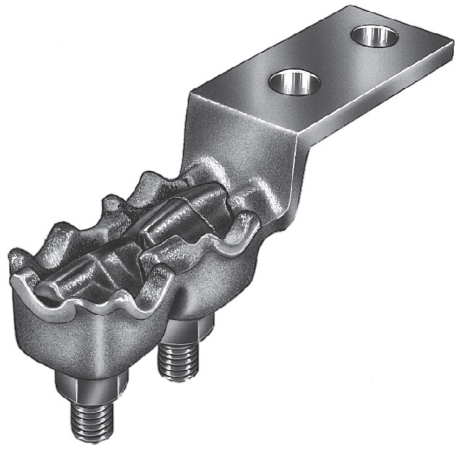

Double eyebolt, bronze alloy terminal for connecting one or two copper cables to copper flat. Double eyebolt provides high pullout resistance.

Material: **Casting**—bronze alloy
Eyebolts—high strength bronze
Hardware—silicon bronze or stainless steel

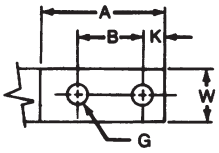

FIGURE 1

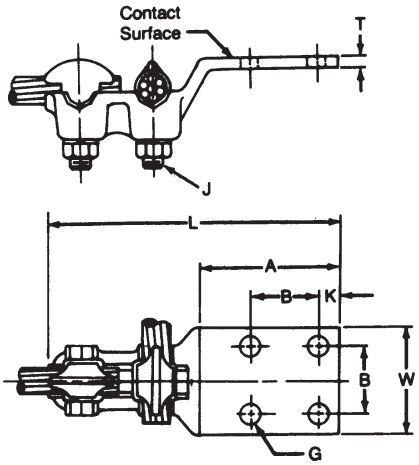

FIGURE 2

Product Data & Conductor Size

CATALOG NUMBER	FIG. NO.	COPPER CONDUCTOR RANGE		DIMENSIONS INCHES (MM)								APPROX. WT. EACH LBS. (KG)
		CABLE	CABLE DIA. INCHES (MM)	L	A	B	K	T	W	J	G	
VL4D412H	1	#6 Sol.-250 MCM	.162-.575 (4.11-14.60)	5-7/8 (149.22)	2-1/2 (63.5)	1 (25.4)	1/2 (12.7)	1/4 (6.35)	1-1/8 (28.58)	1/2 (12.7)	7/16 (11.11)	1.2 (.5)
VL4D414H	1			7 (177.8)	3-1/4 (82.55)	1-3/4 (44.45)	5/8 (15.88)	1/4 (6.35)	1-5/8 (41.28)	1/2 (12.7)	9/16 (14.29)	1.8 (.8)
VL4D574H	1	#2 Sol.-350 MCM	.258-.681 (6.55-17.30)	7-1/2 (190.5)	3-5/8 (92.08)	1-3/4 (44.45)	5/8 (15.88)	1/4 (6.35)	1-5/8 (41.28)	1/2 (12.7)	9/16 (14.29)	2.0 (.9)
*VL4D611H	1	1/0 Sol.-500 MCM	.325-.813 (8.26-20.65)	7 (177.8)	2-1/2 (63.5)	1-3/4 (44.45)	1/2 (12.7)	1/4 (6.35)	1-1/4 (31.75)	1/2 (12.7)	7/16 (11.11)	2.1 (1.0)
*VL4D613H	1			8 (203.2)	4 (101.6)	1-3/4 (44.45)	5/8 (15.88)	1/4 (6.35)	1-5/8 (41.28)	1/2 (12.7)	9/16 (14.29)	2.5 (1.2)
*VL4D614H	2			7-1/2 (190.5)	3-5/8 (92.06)	1-3/4 (44.45)	5/8 (15.88)	1/4 (6.35)	3 (76.2)	1/2 (12.7)	9/16 (14.29)	3.5 (1.6)
*VL4D892H	1	2/0 Sol.-1000 MCM	.365-1.152 (9.27-29.26)	7-1/2 (190.5)	3-1/4 (82.55)	1-3/4 (44.45)	5/8 (15.88)	1/2 (12.7)	2 (50.8)	1/2 (12.7)	9/16 (14.29)	4.5 (2.0)
*VL4D893H	2			7-1/2 (190.5)	3-1/4 (82.55)	1-3/4 (44.45)	5/8 (15.88)	1/2 (12.7)	3 (76.2)	1/2 (12.7)	9/16 (14.29)	4.9 (2.2)

** Cable entrance only from end of terminal.*

TERMINALS
BRONZE DOUBLE EYEBOLT TERMINAL
TWO CABLES TO FLAT

BRONZE
VL2

Bronze alloy terminal, with double eyebolt clamping for connecting two copper cables to copper flat. Double eyebolt provides high pullout resistance. Tongue holes have NEMA spacing.

Material: **Casting**—bronze alloy
Eyebolts—high strength bronze
Hardware—silicon bronze or stainless steel

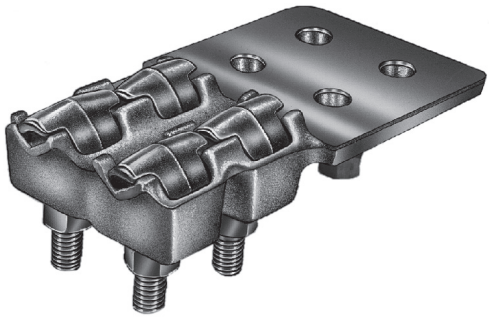

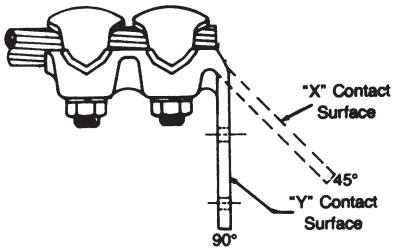

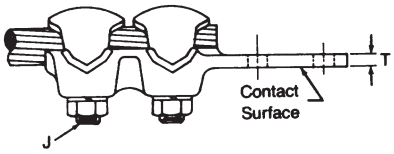

45° & 90° angle connectors may be obtained by specifying desired angle.

Example: VL261B2HY90

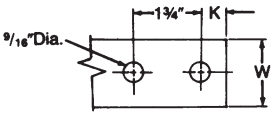

FIG. 1

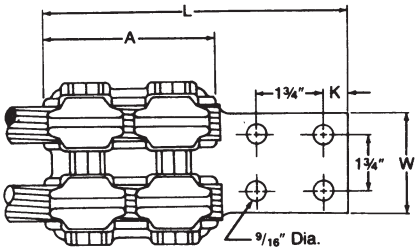

FIG. 2

Product Data & Conductor Size

CATALOG NUMBER	FIG. NO.	COPPER CONDUCTOR RANGE		DIMENSIONS INCHES (MM)						APPROX. WT. EACH LBS. (KG)
		CABLE	CABLE DIA. INCHES (MM)	L	A	K	T	W	J	
VL241BH	1	#6 Sol.-250 MCM	.162-.575 (4.11-14.60)	6-1/2 (165.1)	3-1/4 (82.55)	5/8 (15.88)	1/4 (6.35)	2 (50.8)	1/2 (12.7)	2.7 (1.3)
VL241CH	2			6-3/4 (171.45)	3-1/2 (88.9)	5/8 (15.88)	1/4 (6.35)	3 (76.2)	1/2 (12.7)	3.0 (1.3)
VL257B2H	1	#2 Sol.-350 MCM	.258-.681 (6.55-17.30)	6-9/16 (166.69)	3-9/16 (90.49)	5/8 (15.88)	1/4 (6.35)	2 (50.8)	1/2 (12.7)	3.0 (1.3)
VL257CH	2			6-9/16 (166.69)	3-9/16 (90.49)	5/8 (15.88)	1/4 (6.35)	3 (76.2)	1/2 (12.7)	3.5 (1.6)
*VL261B2H	1	1/0 Sol.-500 MCM	.325-.813 (8.26-20.65)	6-9/16 (166.69)	3-9/16 (90.49)	5/8 (15.88)	5/16 (7.94)	2 (50.8)	1/2 (12.7)	3.8 (1.7)
*VL261CH	2			6-11/16 (169.86)	3-11/16 (93.66)	5/8 (15.88)	5/16 (7.94)	3 (76.2)	1/2 (12.7)	3.5 (1.6)
*VL261DH	2			7-9/16 (192.09)	3-9/16 (90.49)	1-1/8 (28.58)	5/16 (7.94)	4 (101.6)	1/2 (12.7)	4.5 (2.0)
*VL289CH	2	2/0 Sol.-1000 MCM	.365-1.152 (9.27-29.26)	6-15/16 (176.21)	3-11/16 (93.66)	5/8 (15.88)	1/2 (12.7)	3 (76.2)	1/2 (12.7)	5.6 (2.6)
*VL289DH	2			7-15/16 (201.61)	3-11/16 (93.66)	1-1/8 (28.58)	1/2 (12.7)	4 (101.6)	1/2 (12.7)	6.7 (3.0)
*VL292DH	2	1000-1500 MCM	1.152-1.412 (29.26-35.86)	8-1/4 (209.55)	4 (101.6)	1-1/8 (28.58)	5/8 (15.88)	4 (101.6)	1/2 (12.7)	7.9 (3.5)

** Cable entrance only from end of terminal.*

BRONZE
VL3D

TERMINALS
BRONZE DOUBLE EYEBOLT TERMINAL
THREE CABLES TO FLAT

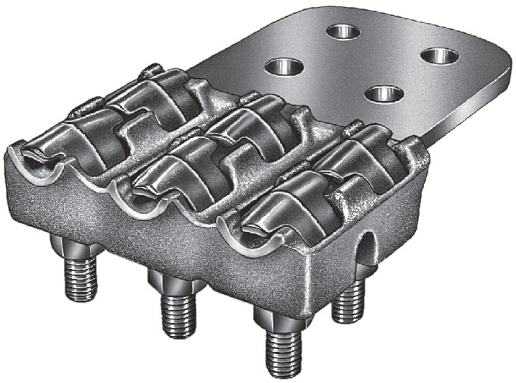

Bronze alloy terminal, with double eyebolt clamping for connecting three copper cables to copper flat. Double eyebolt provides high pullout resistance. Tongue holes have NEMA spacing.

Material: **Casting**—bronze alloy
Eyebolts—high strength bronze
Hardware—silicon bronze or stainless steel

45° & 90° angle connectors may be obtained by specifying desired angle.

Example: VL3D61DHY90

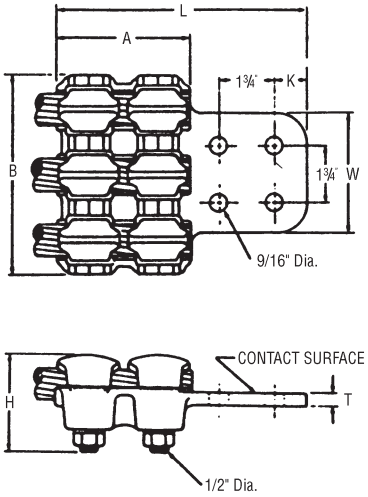

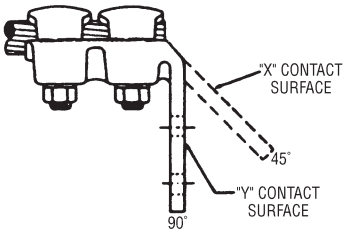

Product Data & Conductor Size

CATALOG NUMBER	COPPER CONDUCTOR RANGE		DIMENSIONS INCHES (MM)							APPROX. WT. EACH LBS. (KG)
	CABLE	CABLE DIA. INCHES (MM)	L	A	H	K	T	W	B	
VL3D61DH	1/0 Sol.-500 MCM	.325-.813 (8.26-20.65)	8 (203.2)	4 (101.6)	3 (76.2)	1-1/8 (28.58)	5/16 (7.94)	4 (101.6)	5-1/16 (128.59)	6.0 (2.7)
VL3D71CH	350-750 MCM	.681-.998 (16.3-25.35)	7-1/2 (190.5)	4 (101.6)	3 (76.2)	5/8 (15.88)	1/2 (12.7)	3 (76.2)	5-3/4 (146.05)	6.7 (3.04)
VL3D89DH	2/0 Sol.-1000 MCM	.365-1.152 (9.27-29.26)	8 (203.2)	3-3/4 (95.25)	3-3/4 (95.25)	1-1/8 (28.58)	1/2 (12.7)	4 (101.6)	5-7/8 (149.22)	9.6 (4.4)
VL3D92DH	1000-1500 MCM	1.152-1.412 (29.26-35.86)	8 (203.2)	4 (101.6)	4 (101.6)	1-1/8 (28.58)	5/8 (15.88	4 (101.6)	7-1/2 (190.5)	12.0 (5.4)

TERMINALS
BRONZE DOUBLE EYEBOLT TERMINAL
FOUR CABLES TO FLAT

BRONZE
VL44D

Bronze alloy terminal, with double eyebolt clamping for connecting four copper cables to copper flat. Double eyebolt provides high pullout resistance. Tongue holes have NEMA spacing.

Material: **Casting**—bronze alloy
Eyebolts—high strength bronze
Hardware—silicon bronze or stainless steel

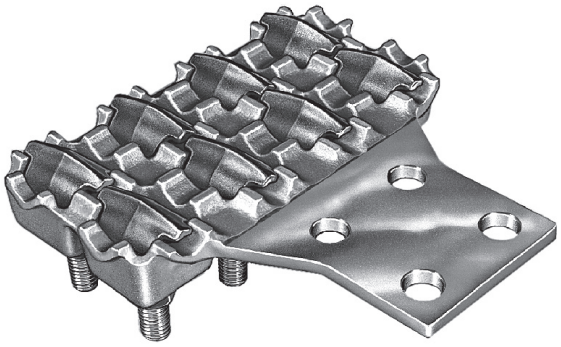

45° & 90° angle connectors may be obtained by specifying desired angle.

Example: VL44D71DHY90

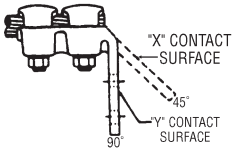

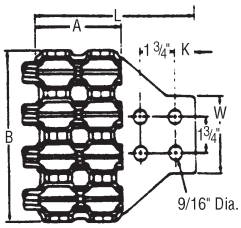

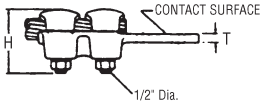

Product Data & Conductor Size

CATALOG NUMBER	COPPER CONDUCTOR RANGE		DIMENSIONS INCHES (MM)							APPROX. WT. EACH LBS. (KG)
	CABLE	CABLE DIA. INCHES (MM)	L	A	H	K	T	W	B	
VL44D61DH	1/0 Sol.-500 MCM	.325-.813 (8.26-20.65)	8-1/4 (209.55)	4 (101.6)	3 (76.2)	1-1/8 (28.58)	5/16 (7.94)	4 (101.6)	6-3/4 (171.45)	7.5 (3.4)
VL44D71DH	350-750 MCM	.681-.998 (16.3-25.35)	8-1/4 (209.55)	4 (101.6)	3 (76.2)	1-1/8 (28.58)	3/8 (9.52)	4 (101.6)	7-5/8 (193.68)	9.6 (4.36)
VL44D89DH	2/0 Sol.-1000 MCM	.365-1.152 (9.27-29.26)	8-1/4 (209.55)	3-11/16 (93.66)	3-3/4 (95.25)	1-1/8 (28.58)	1/2 (12.7)	4 (101.6)	8 (203.2)	11.6 (5.3)

TERMINALS
BRONZE STRAIGHT BOLT TERMINAL
TUBE TO FLAT

BRONZE

STF4

Copper alloy terminal for connecting copper tubing to copper flat. Side formed pad is standard for flush mounting. Suitable for normal and heavy duty applications. Tongue holes have NEMA spacing.

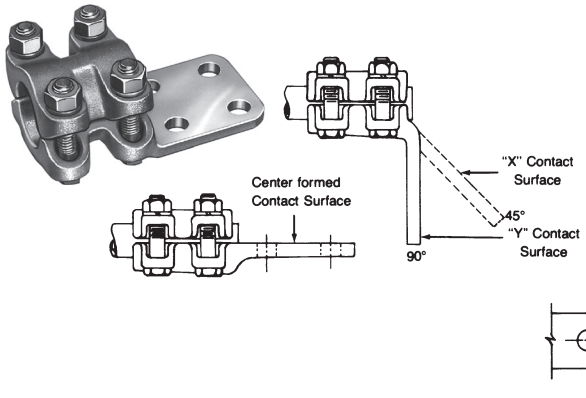

FIG. 1

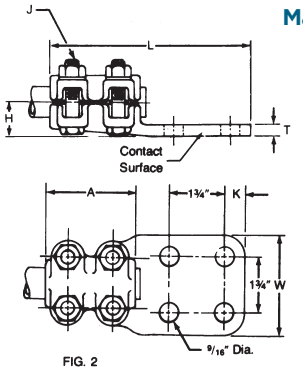

FIG. 2

Material: **Castings**—bronze alloy
Clamping hardware—silicon bronze or stainless steel

Center formed tongues may be obtained by adding suffix "CF" to catalog number.

Example: STF420CCF

45° & 90° angle connectors may be obtained by specifying desired angle.

Example: STF414B2Y90

Product Data & Conductor Size

CATALOG NUMBER	FIG. NO.	CONDUCTOR SIZE TUBING IPS	DIMENSIONS INCHES (MM)							APPROX. WT. EACH LBS. (KG)
			L	A	H	K	T	W	J	
STF404B3	1	1/2	5-3/4 (146.05)	2-1/2 (63.5)	7/8 (22.22)	5/8 (15.88)	5/16 (7.94)	1-1/2 (38.1)	3/8 (9.52)	1.8 (.8)
STF406B2	1	3/4	6 (152.4)	2-1/2 (63.5)	1-1/8 (28.58)	5/8 (15.88)	3/8 (9.52)	2 (50.8)	1/2 (12.7)	3.6 (1.6)
STF406C	2	3/4	6 (152.4)	2-1/2 (63.5)	1-1/8 (28.58)	5/8 (15.88)	3/8 (9.52)	3 (76.2)	1/2 (12.7)	3.8 (1.7)
STF410B2	1	1	5-5/8 (142.88)	2-1/2 (63.5)	1-1/8 (28.58)	5/8 (15.88)	5/16 (7.94)	2 (50.8)	1/2 (12.7)	3.3 (1.5)
STF410C	2	1	5-3/4 (146.05)	2-1/2 (63.5)	1-1/8 (28.58)	5/8 (15.88)	3/8 (9.52)	3 (76.2)	1/2 (12.7)	4.2 (1.9)
STF412B2	1	1-1/4	6 (152.4)	2-3/4 (69.85)	1-3/8 (34.92)	5/8 (15.88)	3/8 (9.52)	2 (50.8)	1/2 (12.7)	4.2 (1.9)
STF412C	2	1-1/4	6 (152.4)	2-3/4 (69.85)	1-3/8 (34.92)	5/8 (15.88)	3/8 (9.52)	3 (76.2)	1/2 (12.7)	4.5 (2.0)
STF414B2	1	1-1/2	6 (152.4)	2-3/4 (69.85)	1-5/8 (41.28)	5/8 (15.88)	7/16 (11.11)	2 (50.8)	1/2 (12.7)	4.1 (1.9)
STF414C	2	1-1/2	6 (152.4)	2-3/4 (69.85)	1-5/8 (41.28)	5/8 (15.88)	3/8 (9.52)	3 (76.2)	1/2 (12.7)	5.0 (2.3)
STF420B2	1	2	6-1/4 (158.75)	2-3/4 (69.85)	1-3/4 (44.45)	5/8 (15.88)	7/16 (11.11)	2 (50.8)	1/2 (12.7)	4.5 (2.0)
STF420C	2	2	6 (152.4)	2-3/4 (69.85)	1-3/4 (44.45)	1-1/8 (28.58)	3/8 (9.52)	3 (76.2)	1/2 (12.7)	5.5 (2.5)
STF420D	2	2	7-1/8 (180.98)	2-3/4 (69.85)	1-3/4 (44.45)	5/8 (15.88)	3/8 (9.52)	4 (101.6)	1/2 (12.7)	6.7 (3.0)
STF424C	2	2-1/2	6 (152.4)	2-3/4 (69.85)	2-1/8 (53.98)	1-1/8 (28.58)	1/2 (12.7)	3 (76.2)	1/2 (12.7)	6.3 (2.9)
STF424D	2	2-1/2	7-3/4 (196.85)	3-1/4 (82.55)	2-1/8 (53.98)	1-1/8 (28.58)	1/2 (12.7)	4 (101.6)	1/2 (12.7)	7.4 (3.4)
STF430C	2	3	7 (177.8)	3-1/2 (88.9)	2-1/2 (63.5)	5/8 (15.88)	5/8 (15.88)	3 (76.2)	5/8 (15.88)	10.9 (4.9)
STF430D	2	3	8 (203.2)	3-1/2 (88.9)	2-1/2 (63.5)	1-1/8 (28.58)	5/8 (15.88)	4 (101.6)	5/8 (15.88)	11.8 (5.3)
STF434D	2	3-1/2	8-1/4 (209.55)	3-1/2 (88.9)	2-7/8 (73.02)	1-1/8 (28.58)	3/4 (19.05)	4 (101.6)	5/8 (15.88)	15.2 (6.9)
STF440D	2	4	8-1/2 (215.9)	4 (101.6)	3-1/4 (82.55)	1-1/8 (28.58)	3/4 (19.05)	4 (101.6)	5/8 (15.88)	18.3 (8.3)

TERMINALS
BRONZE BOLTED EXPANSION TERMINAL
TUBE TO FLAT

BRONZE
FSTFL__G

SA 19

Bronze alloy, expansion terminal for connecting a copper tube to copper flat. Tongue holes have NEMA spacing. Tubing guide ball is designed for use with standard tubing.

Material: **Castings**—bronze alloy
Factory formed laminated shunt—copper
Clamping hardware—silicon bronze or stainless steel
Shunt hardware—silicon bronze or stainless steel
Guide ball—bronze alloy

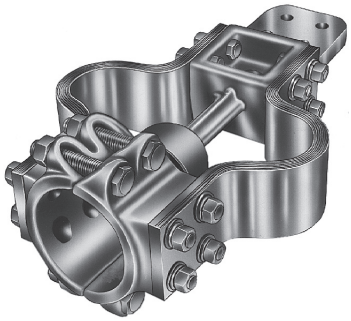

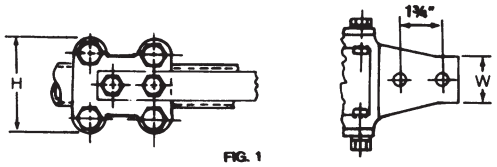

FIG. 1

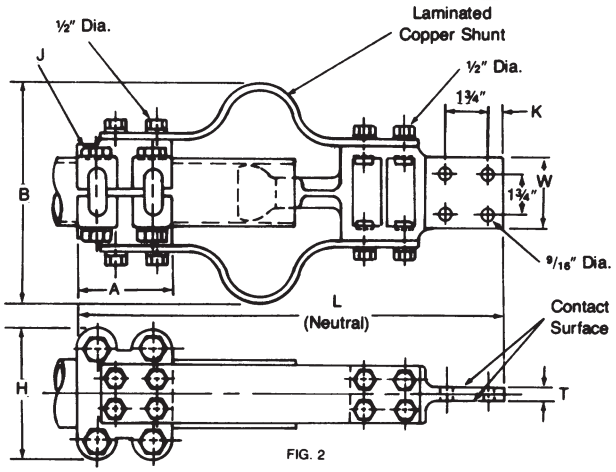

FIG. 2

Product Data & Conductor Size

CATALOG NUMBER	FIG. NO.	CONDUCTOR SIZE TUBING IPS	DIMENSIONS INCHES (MM)								APPROX. WT. EACH LBS. (KG)
			L	A	H	K	T	W	B	J	
FSTFL10B2G	1	1	16 (406.4)	3 (76.2)	3-3/16 (98.64)	5/8 (15.88)	7/16 (11.11)	2 (50.8)	7-1/2 (190.5)	1/2 (12.7)	28.1 (12.8)
FSTFL10CG	2	1	16 (406.4)	3 (76.2)	3-3/16 (98.64)	5/8 (15.88)	3/8 (9.52)	3 (76.2)	7-1/4 (184.2)	1/2 (12.7)	29.2 (13.2)
FSTFL12B2G	1	1-1/4	16 (406.4)	3 (76.2)	3-3/8 (85.72)	5/8 (15.88)	7/16 (11.11)	2 (50.8)	8-3/4 (222.25)	1/2 (12.7)	28.9 (13.1)
FSTFL12CG	2	1-1/4	16 (406.4)	3 (76.2)	3-3/8 (85.72)	5/8 (15.88)	3/8 (9.52)	3 (76.2)	8-3/4 (222.25)	1/2 (12.7)	30.1 (13.7)
FSTFL14B2G	1	1-1/2	16 (406.4)	3 (76.2)	3-7/8 (98.42)	5/8 (15.88)	7/16 (11.11)	2 (50.8)	8-1/2 (215.9)	1/2 (12.7)	29.1 (13.2)
† FSTFL14CG	2	1-1/2	16 (406.4)	3-1/4 (82.55)	3-7/8 (98.42)	5/8 (15.88)	3/8 (9.52)	3 (76.2)	8-1/2 (215.9)	1/2 (12.7)	30.8 (14.0)
FSTFL20B2G	1	2	16 (406.4)	3-1/2 (88.9)	4-1/4 (107.95)	5/8 (15.88)	7/16 (11.11)	2 (50.8)	9-1/2 (241.3)	1/2 (12.7)	30.3 (13.7)
† FSTFL20CG	2	2	16 (406.4)	3-1/2 (88.9)	4-1/4 (107.95)	5/8 (15.88)	3/8 (9.52)	3 (76.2)	9-1/2 (241.3)	1/2 (12.7)	31.5 (14.3)
FSTFL24DG	2	2-1/2	16 (406.4)	3-3/4 (95.25)	4-7/8 (123.82)	1-1/8 (28.58)	3/4 (19.05)	4 (101.6)	9-1/2 (241.3)	1/2 (12.7)	32.6 (14.8)
FSTFL30DG	2	3	17 (431.8)	4 (101.6)	5-7/8 (149.22)	1-1/8 (28.58)	3/4 (19.05)	4 (101.6)	10 (254)	5/8 (15.88)	33.4 (15.2)
FSTFL34DG	2	3-1/2	18 (457.2)	4-1/4 (107.95)	6-1/4 (158.75)	1-1/8 (28.58)	3/4 (19.05)	4 (101.6)	11 (279.4)	5/8 (15.88)	34.1 (15.5)
FSTFL40DG	2	4	18 (457.2)	4 (101.6)	6-3/4 (171.45)	1-1/8 (28.58)	3/4 (19.05)	4 (101.6)	12 (304.8)	5/8 (15.88)	35.0 (15.9)

† Mounting pad is rotated 90° from plane of laminated copper straps.

BRONZE

TS

TERMINALS BRONZE BOLTED MULTI-PURPOSE CONNECTOR CABLE, TUBE, FLAT

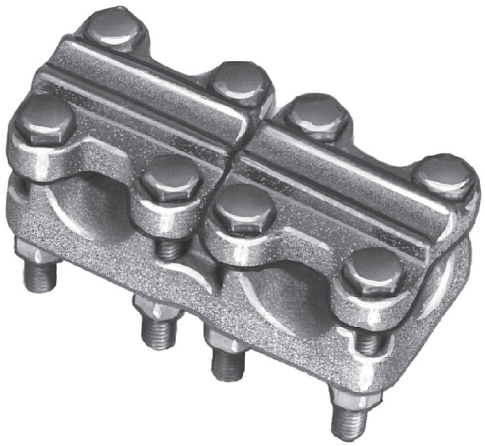

Bronze multi-purpose connector for connecting copper cable, tubing, or flats as terminals, couplers or tee connectors. Recommended for emergency stocks to prevent unnecessary stoppage. Reversible cap accommodates a wide range of cable or tubing sizes. Clamping bolts have hex-stops for one-wrench installation.

Material: **Casting**—bronze alloy
Hardware—silicon bronze or stainless steel

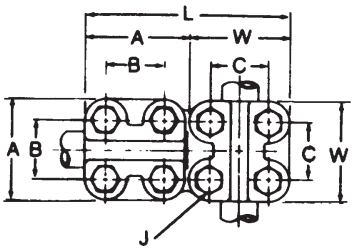

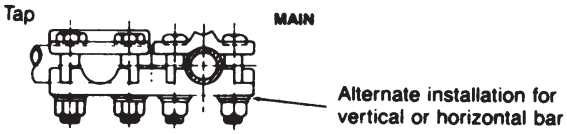

Product Data & Conductor Size

CATALOG NUMBER	COPPER CONDUCTOR RANGE				MAX BAR THICK-NESS	DIMENSIONS INCHES (MM)						APPROX. WT. EACH LBS. (KG)
	MAIN		TAP									
	IPS	CABLE	IPS	CABLE		L	A	B	W	C	J	
TSAA3	1/4—3/4	#2 Sol.—800 MCM	1/4—3/4	#2 Sol.—800 MCM	1/4	4-3/4 (120.65)	2-3/8 (60.32)	1-1/2 (38.1)	2-3/8 (60.32)	1-1/2 (38.1)	3/8 (9.52)	4.8 (2.18)
TSAA		#6 Sol.—850 MCM		#6 Sol.—850 MCM	3/8	6-1/8 (155.6)	3 (76.2)	1-3/4 (44.45)	3 (76.2)	1-3/4 (44.45)	1/2 (12.7)	5.9 (2.68)
TSBA	1/2—1	4/0 Sol.—1500 MCM	1/4—3/4	#6 Sol.—850 MCM	3/8	6-3/8 (161.92)	3-1/4 (82.55)	2 (50.8)	3 (76.2)	1-3/4 (44.45)	1/2 (12.7)	7.2 (3.27)
TSBB			1/2—1	4/0 Sol.—1500 MCM	3/8	6-3/4 (171.45)	3-1/4 (82.55)	2 (50.8)	3-1/4 (82.55)	2 (50.8)	1/2 (12.7)	7.5 (3.40)
TSCC	3/4—1-1/2	850—2000 MCM	3/4—1-1/2	850—2000 MCM	1/2	8-3/8 (212.73)	4 (101.6)	2-3/4 (69.85)	4 (101.6)	2-3/4 (69.85)	1/2 (12.7)	8.5 (3.86)

TERMINALS
BRONZE BOLTED
CABLE TERMINAL ADAPTER TRANSFORMER TERMINAL TO MULTIPLE CABLE

BRONZE

V

SA 21

Bronze terminal adapter for connecting two, three or four copper cables to NEMA secondary transformer terminals.

Material: **Casting**—bronze alloy
Eyebolts—high strength bronze

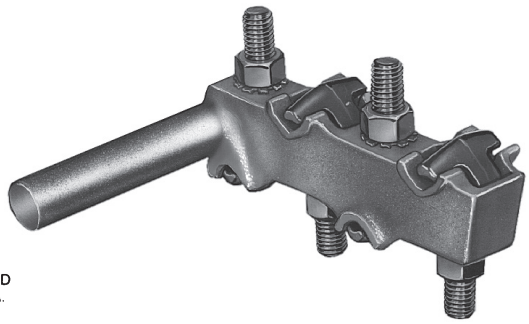

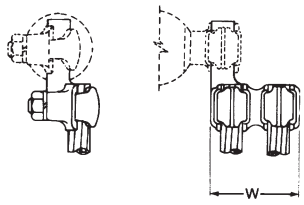

FIG. 1

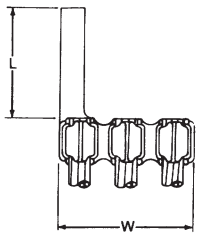

FIG 2

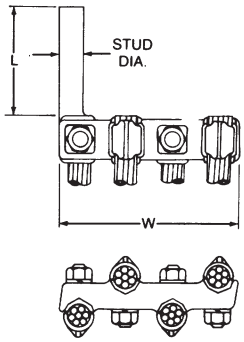

FIG. 3

Product Data & Conductor Size

CATALOG NUMBER	FIG. NO.	TRANSFORMER TERMINAL		STUD DIA.	COPPER CONDUCTOR RANGE		DIMENSIONS INCHES (MM)		APPROX. WT. EACH LBS. (KG)
		EYEBOLT OPENING	CONDUCTOR RANGE		CABLE	DIA.	L	W	
V233	1	7/16	#8 Sol.-2/0 Str.	3/8	#8 Sol.-2/0 Sol.	.128-.365 (3.25-9.27)	1-3/4 (44.45)	2 (50.8)	.42 (.19)
V243	1	5/8	#6 Sol.-4/0 Str.	9/16	#6 Sol-250 MCM	.162-.574 (4.11-14.58)	2 (50.8)	2-5/8 (66.68)	.94 (.43)
V253	1	13/16	#2 Sol.-350 MCM	11/16	#2 Sol.-350 MCM	.255-.681 (6.48-17.30)	2-1/2 (63.5)	3-1/8 (79.38)	1.4 (.64)
V263	1	15/16	1/0 Sol.-500 MCM	27/32	1/0 Sol.-500 MCM	.321-.813 (8.15-20.65)	3-3/4 (95.25)	3-3/4 (95.25)	2.1 (.95)
V333	2	7/16	#8 Sol.-2/0 Str.	3/8	#8 Sol.-2/0 Sol.	.128-.365 (3.25-9.27)	1-3/4 (44.45)	3 (76.2)	.64 (.29)
V343	2	5/8	#6 Sol.-4/0 Str.	9/16	#6 Sol-250 MCM	.162-.574 (4.11-14.58)	2 (50.8)	3-7/8 (98.42)	1.3 (.59)
V353	2	13/16	#2 Sol.-350 MCM	11/16	#2 Sol.-350 MCM	.255-.681 (6.48-17.30)	2-1/2 (63.5)	4-3/4 (120.65)	1.9 (.86)
V363	2	15/16	1/0 Sol.-500 MCM	27/32	1/0 Sol.-500 MCM	.321-.813 (8.15-20.65)	3-3/4 (95.25)	5-5/8 (142.88)	2.9 (1.32)
V389	2	1-1/4	2/0 Sol.-1000 MCM	1-5/32	2/0 Sol.-1000 MCM	.361-1.152 (9.17-29.26)	4-1/2 (114.3)	6 (152.4)	4.8 (2.18)
V433	3	7/16	#8 Sol.-2/0 Str.	3/8	#8 Sol.-2/0 Sol.	.128-.365 (3.25-9.27)	1-3/4 (44.45)	4 (101.6)	1.0 (.45)
V443	3	5/8	#6 Sol.-4/0 Str.	9/16	#6 Sol-250 MCM	.162-.574 (4.11-14.58)	2 (50.8)	5 (127.0)	1.7 (.77)
V453	3	13/16	#2 Sol.-350 MCM	11/16	#2 Sol.-350 MCM	.255-.681 (6.48-17.30)	2-1/2 (63.5)	5-5/8 (142.88)	2.2 (1.0)
V463	3	15/16	1/0 Sol.-500 MCM	27/32	1/0 Sol.-500 MCM	.321-.813 (8.15-20.65)	3-3/4 (95.25)	6-5/8 (168.28)	3.3 (1.50)
V489	3	1-1/4	2/0 Sol.-1000 MCM	1-5/32	2/0 Sol.-1000 MCM	.361-1.152 (9.17-29.26)	4-1/2 (114.3)	7-3/4 (196.85)	5.4 (2.45)

ALUMINUM WELDMENT CONNECTORS

INTRODUCTION

Welded joints of aluminum conductors offer advantages over bolted and compression fittings in performance and economy for certain applications. This is especially true when the proper welding method (MIG or TIG) and the proper weldment connectors are selected.

The best electrical joints are obtained when quality connectors of proven performance, that are backed by a reputable connector manufacturer, are installed with the proper welding methods.

Electric arc welding, with an inert gas shield, provides electrically and mechanically sound joints that require no special surface preparation other than cleaning of the joint to be welded. There is no contact resistance in a properly welded joint. The resulting connection is highly efficient and adds very little bulk to the conductors.

From an economic standpoint, welded joints are more feasible in larger substations that can justify the services of experienced welders and the use of the proper welding apparatus. Practically all types of joints for joining aluminum angle bar, sheet and tubular bus are possible through the use of proper welding accessories. It is also practical to weld tubular bus to cable and cable terminal joints through proper welding techniques and cable connectors. Of course, proper provision must be made to free the cable of high stresses in the vicinity of the weld because of the annealed conductor strands.

Many techniques have been developed for the welded assembly of aluminum conductors in substations, but certain ones have been found to offer more advantages than others. Accessories in the form of cast aluminum weldment connectors have been developed to facilitate the joining and supporting of aluminum conductors. These connectors, as developed by Anderson, have been designed to provide:

1. Rigid support and proper alignment.
2. Fast assembly without need for tedious forming and fitting of bus.
3. Continuous welds of regular contours that provide a weld area equivalent to 1-10% of the cross sectional area of the connector.
4. Neat appearance without bulky additions beyond the size and shape of the conductors.
5. Smooth contours suitable for high voltage applications where corona and R.I.V. level are of concern.
6. Flexible couplers to compensate for expansion and contraction of bus.
7. Many other features available for specific applications.

Anderson supplies cast weldment fittings of 356 aluminum alloy which are heat treated to T6 condition for applications requiring high strength and good electrical conductivity. It is wise to choose the filler alloy on the basis of the parent metal alloys to be joined. A poor choice can cause various difficulties, i.e.,

1. Low strength.
2. Weld cracking.
3. Poor corrosion resistance.
4. Poor color matching.
5. Difficulty in welding.

The filler rod material recommended by Anderson for joining 356-T6 cast aluminum fittings to EC grade aluminum conductor materials is 4043 alloy. This filler material has a typical conductivity of 40 per cent (IACS). Although it would appear that a purer material should be used for welding aluminum castings and the EC grades of conductor materials, the resulting joint usually has a lower resistance than an equivalent length of conductor. Also, a further point for consideration is that 4043 alloy is considerably easier to weld than the higher purity filler materials.

For more information on Welding Methods and Apparatus, see reference section ST.

TERMINALS
WELDMENT ALUMINUM TERMINAL
CABLE TO FLAT

ALUMINUM
WCF

SA 23

Aluminum alloy weldment terminal for connecting aluminum cable to aluminum or copper flat pad. Tongue holes have NEMA spacing. Contact sealant is recommended for contact pad after welding. Cable should be positioned 1/8" to 3/16" from edge inside barrel prior to puddle welding. For use with any stranding Aluminum conductor.

Material: **Casting**—356-F aluminum alloy

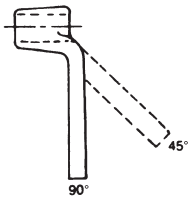

45° & 90° angle connectors may be obtained by specifying desired angle.

Example: WCF39BY90

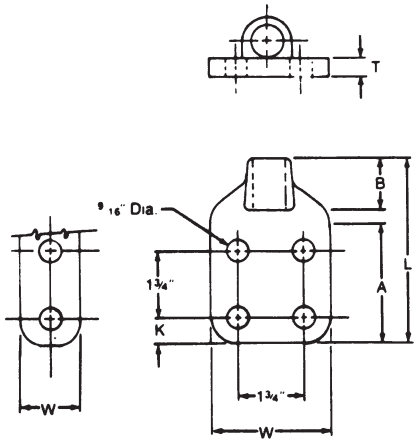

Fig. 1 Fig. 2

Product Data & Conductor Size

CATALOG NUMBER	FIG. NO.	ALUMINUM CONDUCTOR RANGE		DIMENSIONS INCHES (MM)						APPROX. WT. EACH LBS. (KG)
		CABLE SIZE	DIA.	L	A	K	T	W	B	
WCF50B	1	3/0	.447 - .470 (11.35 - 11.94)	4-1/2 (114.3)	3-1/4 (82.55)	5/8 (15.88)	5/16 (7.94)	1-1/2 (38.1)	1 (25.4)	.19 (.09)
WCF56B	1	4/0	.502 - .528 (12.75 - 13.41)	4-1/2 (114.3)	3-1/4 (82.55)	5/8 (15.88)	5/16 (7.94)	1-1/2 (38.1)	1 (25.4)	.22 (.10)
WCF63B	1	250 - 266.8 MCM	.563 - .593 (14.3 - 15.06)	4-1/2 (114.3)	3-1/4 (82.55)	5/8 (15.88)	5/16 (7.94)	1-1/2 (38.1)	1 (25.4)	.22 (.10)
WCF63C	2	250 - 266.8 MCM	.563 - .593 (14.3 - 15.06)	4-1/2 (114.3)	3-1/4 (82.55)	5/8 (15.88)	5/16 (7.94)	3 (76.2)	1 (25.4)	.42 (.19)
WCF67B	1	300 - 336.4 MCM	.625 - .670 (15.88 - 17.02)	4-3/4 (120.65)	3-1/4 (82.55)	5/8 (15.88)	3/8 (9.52)	1-1/2 (38.1)	1-1/4 (31.75)	.31 (.14)
WCF67C	2	300 - 336.4 MCM	.625 - .670 (15.88 - 17.02)	4-3/4 (120.65)	3-1/4 (82.55)	5/8 (15.88)	3/8 (9.52)	3 (76.2)	1-1/4 (31.75)	.53 (.24)
WCF72B2	1	336.4 - 350 MCM	.666 - .684 (16.92 - 17.37)	4-3/4 (120.65)	3-1/4 (82.55)	5/8 (15.88)	3/8 (9.52)	3 (76.2)	1-1/4 (31.75)	.71 (.32)
WCF72C	2	336.4 - 350 MCM	.666 - .684 (16.92 - 17.37)	4-3/4 (120.65)	3-1/4 (82.55)	5/8 (15.88)	3/8 (9.52)	3 (76.2)	1-1/4 (31.75)	.89 (.40)
WCF78B	1	397.5 - 400 MCM	.721 - .728 (18.31 - 18.49)	4-3/4 (120.65)	3-1/4 (82.55)	5/8 (15.88)	3/8 (9.52)	1-1/2 (38.1)	1-1/4 (31.75)	.78 (.35)
WCF78C	2	397.5 - 400 MCM	.721 - .728 (18.31 - 18.49)	4-3/4 (120.65)	3-1/4 (82.55)	5/8 (15.88)	3/8 (9.52)	3 (76.2)	1-1/4 (31.75)	.84 (.38)
WCF83B	1	450 - 477 MCM	.772 - .795 (19.61 - 20.19)	4-3/4 (120.65)	3-1/4 (82.55)	5/8 (15.88)	3/8 (9.52)	1-1/2 (38.1)	1-1/4 (31.75)	.75 (.34)
WCF83C	2	450 - 477 MCM	.772 - .795 (19.61 - 20.19)	4-3/4 (120.65)	3-1/4 (82.55)	5/8 (15.88)	3/8 (9.52)	3 (76.2)	1-1/4 (31.75)	.89 (.40)
WCF88B	1	500	.806 - .846 (20.47 - 21.49)	4-3/4 (120.65)	3-1/4 (82.55)	5/8 (15.88)	3/8 (9.52)	1-1/2 (38.1)	1-1/4 (31.75)	.89 (.40)
WCF88C	2	500	.806 - .846 (20.47 - 21.49)	4-3/4 (120.65)	3-1/4 (82.55)	5/8 (15.88)	3/8 (9.52)	3 (76.2)	1-1/4 (31.75)	.93 (.42)
WCF92B2	1	550 - 556.5 MCM	.855 - .883 (21.49 - 22.43)	5 (127.0)	3-1/4 (82.55)	5/8 (15.88)	1/2 (12.7)	2 (50.8)	1-1/2 (38.1)	.90 (.41)
WCF92C	2	550 - 556.5 MCM	.855 - .883 (21.49 - 22.43)	5 (127.0)	3-1/4 (82.55)	5/8 (15.88)	1/2 (12.7)	3 (76.2)	1-1/2 (38.1)	.90 (.41)

Continued on the next page.

TERMINALS
WELDMENT ALUMINUM TERMINAL
CABLE TO FLAT
(CONTINUED)

Product Data & Conductor Size

CATALOG NUMBER	FIG. NO.	ALUMINUM CONDUCTOR RANGE		DIMENSIONS INCHES (MM)						APPROX. WT. EACH LBS. (KG)
		CABLE SIZE	DIA.	L	A	K	T	W	B	
WCF97B2	1	600 - 650 MCM	.891 - .930 (22.63 - 23.62)	5 (127.0)	3-1/4 (82.55)	5/8 (15.88)	1/2 (12.7)	2 (50.8)	1-1/2 (38.1)	.92 (.42)
WCF97C	2	600 - 650 MCM	.891 - .930 (22.63 - 23.62)	5 (127.0)	3-1/4 (82.55)	5/8 (15.88)	1/2 (12.7)	1-1/2 (38.1)	1-1/2 (38.1)	.77 (.35)
WCF106B2	1	750 - 795 MCM	.990 - 1.028 (25.15 - 26.11)	5 (127.0)	3-1/4 (82.55)	5/8 (15.88)	1/2 (12.7)	2 (50.8)	1-1/2 (38.1)	.72 (.33)
WCF106C	2	750 - 795 MCM	.990 - 1.028 (25.15 - 26.11)	5 (127.0)	3-1/4 (82.55)	5/8 (15.88)	1/2 (12.7)	3 (76.2)	1-1/2 (38.1)	.83 (.38)
WCF106D	2	750 - 795 MCM	.990 - 1.028 (25.15 - 26.11)	6 (152.4)	4-1/8 (104.8)	1-1/8 (28.6)	1/2 (12.7)	4 (101.6)	1-3/4 (44.45)	1.03 (.47)
WCF117B2	1	900 - 954 MCM	1.093 - 1.125 (27.76 - 28.58)	5-1/4 (133.4)	3-1/4 (82.55)	5/8 (15.88)	5/8 (15.9)	2 (50.8)	1-3/4 (44.45)	.73 (.33)
WCF117C	2	900 - 954 MCM	1.093 - 1.125 (27.76 - 28.58)	5-1/4 (133.4)	3-1/4 (82.55)	5/8 (15.88)	5/8 (15.9)	3 (76.2)	1-3/4 (44.45)	.96 (.44)
WCF117D	2	900 - 954 MCM	1.093 - 1.125 (27.76 - 28.58)	6 (152.4)	4-1/8 (104.8)	1-1/8 (28.6)	1/2 (12.7)	4 (101.6)	1-3/4 (44.45)	1.2 (.54)
WCF123B2	1	1000 - 1033.5 MCM	1.140 - 1.172 (28.96 - 29.77)	5-1/4 (133.4)	3-1/4 (82.55)	5/8 (15.88)	5/8 (15.9)	2 (50.8)	1-3/4 (44.45)	.75 (.34)
WCF123C	2	1000 - 1033.5 MCM	1.140 - 1.172 (28.96 - 29.77)	5-1/4 (133.4)	3-1/4 (82.55)	5/8 (15.88)	5/8 (15.9)	3 (76.2)	1-3/4 (44.45)	.98 (.44)
WCF123D	2	1000 - 1033.5 MCM	1.140 - 1.172 (28.96 - 29.77)	6 (152.4)	4-1/8 (104.8)	1-1/8 (28.6)	1/2 (12.7)	4 (101.6)	1-3/4 (44.45)	1.3 (.59)
WCF129B2	1	1100 - 1113 MCM	1.196 - 1.245 (30.38 - 31.62)	5-1/2 (139.7)	3-1/4 (82.55)	5/8 (15.88)	3/4 (19.1)	2 (50.8)	2 (50.8)	1.0 (.45)
WCF129D	2	1100 - 1113 MCM	1.196 - 1.245 (30.38 - 31.62)	6-1/4 (158.8)	4-1/8 (104.8)	1-1/8 (28.6)	9/16 (14.3)	4 (101.6)	2 (50.8)	1.4 (.63)
WCF136D	2	1200 - 1300 MCM	1.263 - 1.315 (32.08 - 33.40)	6-1/4 (158.8)	4-1/8 (104.8)	1-1/8 (28.6)	9/16 (14.3)	4 (101.6)	2 (50.8)	1.5 (.68)
WCF143D	2	1351.5 MCM	1.320 - 1.346 (33.53 - 34.19)	6-1/4 (158.8)	4-1/8 (104.8)	1-1/8 (28.6)	9/16 (14.3)	4 (101.6)	2 (50.8)	1.5 (.68)
WCF147D	2	1431 MCM	1.364 - 1.412 (34.65 - 46.33)	6-1/4 (158.8)	4-1/8 (104.8)	1-1/8 (28.6)	9/16 (14.3)	4 (101.6)	2 (50.8)	1.5 (.68)
WCF155D	2	1590 - 1700 MCM	1.454 - 1.504 (36.93 - 38.20)	6-3/4 (171.5)	4-1/8 (104.8)	1-1/8 (28.6)	5/8 (15.9)	4 (101.6)	2-1/2 (63.5)	2.3 (1.04)
WCF172D	2	2000 MCM	1.630 - 1.631 (41.40 - 41.43)	6-3/4 (171.5)	4-1/8 (104.8)	1-1/8 (28.6)	5/8 (15.9)	4 (101.6)	2-1/2 (63.5)	2.3 (1.04)
WCF181D	2	2250 MCM	1.729 - 1.762 (43.92 - 44.75)	7-1/4 (184.2)	4-1/8 (104.8)	1-1/8 (28.6)	3/4 (19.1)	4 (101.6)	3 (76.2)	3.6 (1.63)
WCF188D	2	2500 MCM	1.823 - 1.824 (46.30 - 46.33)	7-1/4 (184.2)	4-1/8 (104.8)	1-1/8 (28.6)	3/4 (19.1)	4 (101.6)	3 (76.2)	3.6 (1.63)
WCF240D	2	— —	2.4 (60.96)	7-1/4 (184.2)	4-1/4 (107.95)	1-1/8 (28.6)	1 (25.4)	4 (101.6)	2-3/4 (69.85)	3.8 (1.72)

TERMINALS
WELDMENT ALUMINUM TERMINAL
TWO CABLES TO FLAT

ALUMINUM
W2CF

Aluminum alloy weldment terminal for connecting two aluminum cables to aluminum or copper flat pad. Tongue holes have NEMA spacing. Contact sealant is recommended for contact pad after welding. Cable should be positioned 1/8" to 3/16" from edge inside barrel prior to puddle welding. For use with any stranding Aluminum conductor.

Material: **Casting**—356-F aluminum alloy

45° & 90° angle connectors may be obtained by specifying desired angle.

Example: W2CF72CY90

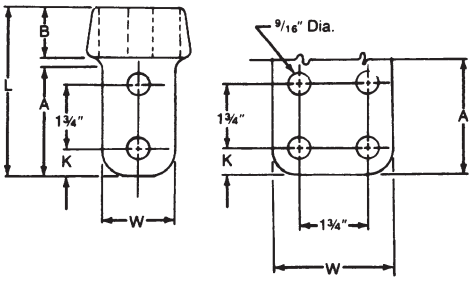

Fig. 2

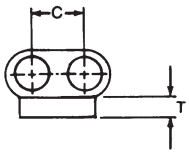

Fig. 1

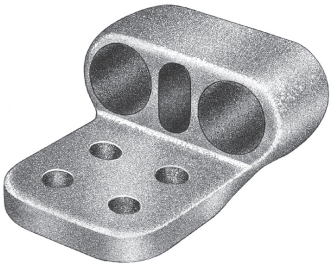

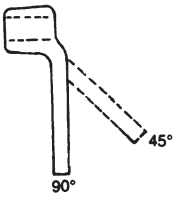

Product Data & Conductor Size

CATALOG NUMBER	FIG. NO.	ALUMINUM CONDUCTOR SIZE		DIMENSIONS INCHES (MM)							APPROX. WT. EACH LBS. (KG)
		CABLE SIZE	DIA.	L	A	K	T	B	W	C	
W2CF72C	2	336.4 - 350 MCM	.666 - .684 (16.92 - 17.37)	4-3/4 (120.7)	3-1/4 (82.6)	5/8 (15.9)	7/16 (11.1)	1-1/4 (31.8)	3 (76.2)	1-1/2 (38.1)	.72 (.33)
W2CF78C	2	397.5 - 400 MCM	.721 - .728 (18.31 - 18.49)	4-3/4 (120.7)	3-1/4 (82.6)	5/8 (15.9)	7/16 (11.1)	1-1/4 (31.8)	3 (76.2)	1-1/2 (38.1)	.73 (.33)
W2CF83C	2	450 - 477 MCM	.772 - .795 (19.61 - 20.19)	4-3/4 (120.7)	3-1/4 (82.6)	5/8 (15.9)	7/16 (11.1)	1-1/4 (31.8)	3 (76.2)	1-1/2 (38.1)	.78 (.35)
W2CF92C	2	550 - 556.5 MCM	.855 - .883 (21.97 - 22.43)	5 (127.0)	3-1/4 (82.6)	5/8 (15.9)	1/2 (12.7)	1-1/2 (38.1)	3 (76.2)	1-7/8 (47.6)	.80 (.36)
W2CF97B2	1	600 - 650 MCM	.891 - .930 (22.63 - 23.62)	5 (127.0)	3-1/2 (88.9)	5/8 (15.9)	5/8 (15.9)	1-1/2 (38.1)	3 (76.2)	1-7/8 (47.6)	.93 (.42)
W2CF97C	2	600 - 650 MCM	.891 - .930 (22.63 - 23.62)	5 (127.0)	3-1/4 (82.6)	5/8 (15.9)	1/2 (12.7)	1-1/2 (38.1)	3 (76.2)	1-7/8 (47.6)	1.1 (.50)
W2CF103C	2	700 - 715.5 MCM	.953 - .977 (24.21 - 24.82)	5 (127.0)	3-1/4 (82.6)	5/8 (15.9)	1/2 (12.7)	1-1/2 (38.1)	3 (76.2)	1-7/8 (47.6)	1.2 (.54)
W2CF106B2	1	750 - 795 MCM	.990 - 1.028 (25.15 - 26.11)	5 (127.0)	3-1/2 (88.9)	5/8 (15.9)	5/8 (15.9)	1-1/2 (38.1)	3 (76.2)	1-7/8 (47.6)	1.1 (.50)
W2CF106C	2	750 - 795 MCM	.990 - 1.028 (25.15 - 26.11)	5 (127.0)	3-1/4 (82.6)	5/8 (15.9)	1/2 (12.7)	1-1/2 (38.1)	3 (76.2)	1-7/8 (47.6)	1.3 (.59)
W2CF117C	2	900 - 954 MCM	1.093 - 1.125 (27.76 - 28.58)	5-1/4 (133.4)	3-1/4 (82.6)	5/8 (15.9)	11/16 (17.5)	1-3/4 (44.5)	3 (76.2)	2-3/16 (55.6)	1.4 (.64)
W2CF123C	2	1000 - 1033.5 MCM	1.140 - 1.172 (28.96 - 29.77)	5-1/4 (133.4)	3-1/4 (82.6)	5/8 (15.9)	11/16 (17.5)	1-3/4 (44.5)	3 (76.2)	2-3/16 (55.6)	1.8 (.82)
W2CF129D	2	1100 - 1113 MCM	1.196 - 1.245 (30.38 - 31.62)	6-1/4 (158.8)	4-1/8 (104.8)	1-1/8 (28.6)	11/16 (17.5)	2 (50.8)	4 (101.6)	2-9/16 (65.1)	2.7 (1.22)
W2CF136D	2	1200 - 1300 MCM	1.263 - 1.315 (32.08 - 33.40)	6-1/4 (158.8)	4-1/8 (104.8)	1-1/8 (28.6)	11/16 (17.5)	2 (50.8)	4 (101.6)	2-9/16 (65.1)	2.7 (1.22)
W2CF143D	2	1351.5 MCM	1.320 - 1.346 (33.53 - 34.19)	6-1/4 (158.8)	4-1/8 (104.8)	1-1/8 (28.6)	9/16 (14.3)	2 (50.8)	4 (101.6)	2-9/16 (65.1)	2.7 (1.22)
W2CF155D	2	1590 - 1700 MCM	1.454 - 1.504 (36.93 - 38.20)	6-3/4 (171.5)	4-1/8 (104.8)	1-1/8 (28.6)	3/4 (19.1)	2-1/2 (63.5)	4 (101.6)	3 (76.2)	3.6 (1.63)
W2CF172D	2	2000 MCM	1.630 - 1.631 (41.40 - 41.43)	6-3/4 (171.5)	4-1/8 (104.8)	1-1/8 (28.6)	5/8 (15.9)	2-1/2 (63.5)	4 (101.6)	3 (76.2)	3.6 (1.63)
W2CF188D	2	2500 MCM	1.823 - 1.824 (46.30 - 46.33)	7-1/4 (184.2)	4-1/8 (104.8)	1-1/8 (28.6)	1 (25.4)	3 (76.2)	4 (101.6)	3-1/4 (82.6)	5.7 (2.85)

ALUMINUM

WSTF

TERMINALS
WELDMENT ALUMINUM TERMINAL
TUBE TO FLAT

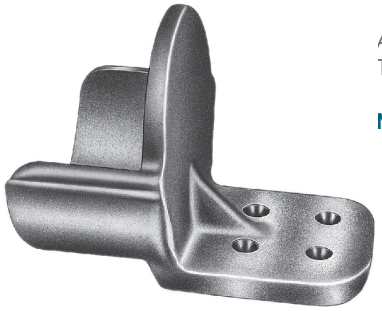

Aluminum alloy weldment terminal for connecting aluminum tubing to aluminum or copper flat pad. Tongue holes have NEMA spacing. Contact sealant is recommended for contact pad after welding.

Material: **Casting**—356-F aluminum alloy

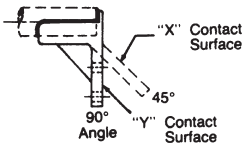

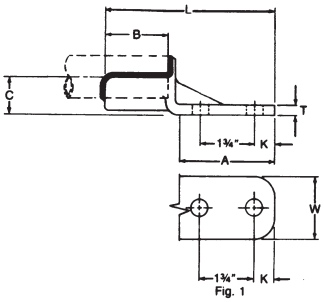

Fig. 1

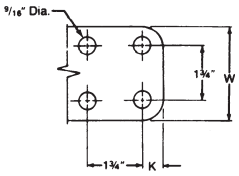

Fig. 2

Center formed pad may be obtained by adding "CF" to catalog number.
Example: WSTF10B2CF
45° & 90° angle connectors may be obtained by specifiying desired angle.
Example: WSTF06B2Y90

Product Data & Conductor Size

CATALOG NUMBER	FIG. NO.	ALUMINUM CONDUCTOR SIZE IPS/EHIPS	DIMENSIONS INCHES (MM)							APPROX. WT. EACH LBS. (KG)
			L	A	B	C	K	T	W	
WSTF06B2	1	3/4	6 (152.4)	3-1/4 (82.55)	2-1/2 (63.5)	1-1/2 (38.1)	5/8 (15.88)	3/8 (9.52)	2 (50.8)	.53 (.24)
WSTF10B2	1	1	6-1/4 (158.75)	3-1/4 (82.55)	2-3/4 (69.85)	1-3/16 (30.16)	5/8 (15.88)	3/8 (9.52)	2 (50.8)	.66 (.30)
WSTF10C	2	1	6-1/8 (155.58)	3-1/4 (82.55)	2-3/4 (69.85)	1-3/16 (30.16)	5/8 (15.88)	3/8 (9.52)	3 (76.2)	.70 (.32)
WSTF12B2	1	1-1/4	6-5/8 (168.28)	3-1/4 (82.55)	3 (76.2)	1-3/8 (34.92)	5/8 (15.88)	3/8 (9.52)	2 (50.8)	.76 (.34)
WSTF12C	2	1-1/4	6-3/8 (161.92)	3-1/4 (82.55)	3 (76.2)	1-3/8 (34.92)	5/8 (15.88)	3/8 (9.52)	3 (76.2)	.87 (.40)
WSTF14B2	1	1-1/2	6-3/4 (171.45)	3-1/4 (82.55)	3-1/4 (82.55)	1-1/2 (38.1)	5/8 (15.88)	7/16 (11.11)	2 (50.8)	.90 (.41)
WSTF14C	2	1-1/2	6-3/4 (171.45)	3-1/4 (82.55)	3-1/4 (82.55)	1-1/2 (38.1)	5/8 (15.88)	3/8 (9.52)	3 (76.2)	.85 (.39)
WSTF20B2	1	2	7-1/8 (180.98)	3-1/4 (82.55)	3-1/2 (88.9)	1-3/4 (44.45)	5/8 (15.88)	7/16 (11.11)	2 (50.8)	1.1 (.48)
WSTF20C	2	2	5-1/2 (139.7)	3-1/4 (82.55)	1-3/4 (44.45)	1-3/4 (44.45)	5/8 (15.88)	3/8 (9.52)	3 (76.2)	1.1 (.48)
WSTF20D	2	2	7-7/8 (200.02)	4-1/4 (107.95)	3-1/2 (88.9)	1-3/4 (44.45)	1-1/8 (28.58)	1/2 (12.7)	4 (101.6)	2.0 (.89)
WSTF24B2	1	2-1/2	7-1/2 (190.5)	3-1/4 (82.55)	3-3/4 (95.25)	2 (50.8)	5/8 (15.88)	9/16 (14.29)	2 (50.8)	1.4 (.64)
WSTF24C	2	2-1/2	7-1/2 (190.5)	3-1/4 (82.55)	3-3/4 (95.25)	2 (50.8)	5/8 (15.88)	9/16 (14.29)	3 (76.2)	1.7 (.75)
WSTF24D	2	2-1/2	8-1/4 (209.55)	4-1/4 (107.95)	3-3/4 (95.25)	2 (50.8)	1-1/8 (28.58)	1/2 (12.7)	4 (101.6)	2.0 (.89)
WSTF30B2	1	3	7-7/8 (200.02)	3-1/4 (82.55)	4 (101.6)	2-3/8 (60.32)	5/8 (15.88)	11/16 (17.46)	2 (50.8)	1.9 (.86)
WSTF30C	2	3	6-1/4 (158.75)	3-1/4 (82.55)	2-1/2 (63.5)	2-3/8 (60.32)	5/8 (15.88)	5/8 (15.88)	3 (76.2)	2.0 (.89)
WSTF30D	2	3	9 (228.5)	4-1/4 (107.95)	4 (101.6)	2-3/8 (60.32)	1-1/8 (28.58)	5/8 (15.88)	4 (101.6)	2.9 (1.3)
WSTF34C	2	3-1/2	7-3/4 (196.85)	3-1/4 (82.55)	4-1/4 (107.95)	2-5/8 (66.68)	5/8 (15.88)	5/8 (15.88)	3 (76.2)	2.5 (1.1)
WSTF34D	2	3-1/2	8-3/4 (222.25)	4-1/4 (107.95)	4-1/4 (107.95)	2-5/8 (66.68)	1-1/8 (28.58)	5/8 (15.88)	4 (101.6)	3.0 (1.4)
WSTF40D	2	4	7-3/4 (196.85)	4-1/4 (107.95)	3 (76.2)	2-7/8 (73.02)	1-1/8 (28.58)	3/4 (19.05)	4 (101.6)	3.1 (1.4)
WSTF50D	2	5	7-3/4 (196.85)	4-1/4 (107.95)	3 (76.2)	3-5/8 (92.08)	1-1/8 (28.58)	3/4 (19.05)	4 (101.6)	4.1 (1.9)
WSTF60D	2	6	9-1/4 (234.95)	4-1/4 (107.95)	4-1/4 (107.95)	4 (101.6)	1-1/8 (28.58)	1 (25.4)	4 (101.6)	6.1 (2.8)

TERMINALS WELDMENT
ALUMINUM EXPANSION TERMINAL
TUBE TO FLAT

ALUMINUM

WFTF

SA 27

Aluminum alloy weldment expansion terminals for connecting standard (Schedule 40) aluminum tubing to aluminum or copper flat pad. Designed for +/- 2 inch expansion. Specify "H" in catalog number (WFTFH) if Schedule 80 EHIPS tubing is to be used. Proper guide ball and heavy laminations will be furnished. Contact sealant is recommended for contact pad.

Material: **Casting**—356-F aluminum alloy
Factory formed laminated shunt—aluminum

Note: To obtain pad rotated 90 degrees, add "V" to catalog number.

Example: WFTFV30D

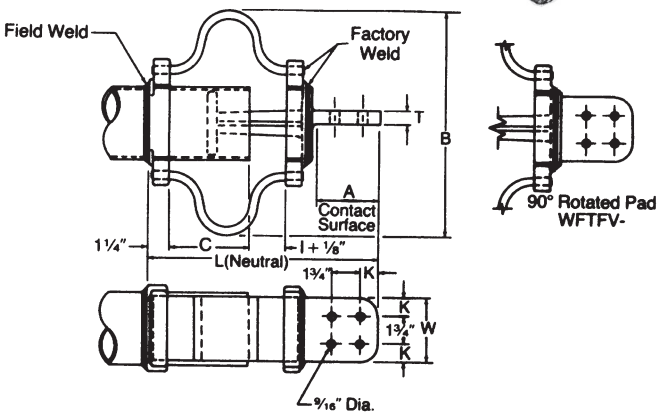

Refer to chart DC-9295 on page SA-6 for installation instructions.

Product Data & Conductor Size

CATALOG NUMBER	ALUMINUM ** CONDUCTOR SIZE IPS	DIMENSIONS INCHES (MM)							APPROX. WT. EACH LBS. (KG)
		L	A	C	K	T	B	W	
WFTF14C	1-1/2	13-1/8 (333.38)	3-1/8 (79.38)	4-5/8 (117.48)	5/8 (15.88)	1/2 (12.7)	11 (279.4)	3 (76.2)	4.3 (1.95)
WFTF20C	2	13 (330.2)	3-1/8 (79.38)	4-1/2 (114.3)	5/8 (15.88)	1/2 (12.7)	11 (279.4)	3 (76.2)	5.7 (2.58)
WFTF20D	2	14 (355.6)	4-1/8 (104.78)	4-1/2 (114.3)	1-1/8 (28.58)	3/8 (9.52)	11 (279.4)	4 (101.6)	7.1 (3.22)
WFTF24C	2-1/2	13-1/8 (333.38)	3-1/8 (79.38)	4-5/8 (117.48)	5/8 (15.88)	5/8 (15.88)	11-1/2 (292.1)	3 (76.2)	7.8 (3.54)
WFTF24D	2-1/2	14-1/8 (358.78)	4-1/8 (104.78)	4-5/8 (117.48)	1-1/8 (28.58)	1/2 (12.7)	11-1/2 (292.1)	4 (101.6)	8.2 (3.72)
WFTF30C	3	13-3/8 (339.72)	3-1/8 (79.38)	4-7/8 (123.82)	5/8 (15.88)	3/4 (19.05)	12-7/8 (327.02)	3 (76.2)	8.9 (4.04)
WFTF30D	3	14-3/8 (365.12)	4-1/8 (104.78)	4-7/8 (123.82)	1-1/8 (28.58)	5/8 (15.88)	12-7/8 (327.02)	4 (101.6)	9.5 (4.31)
WFTF34D	3-1/2	14-1/8 (358.78)	4-1/8 (104.78)	4-5/8 (117.48)	1-1/8 (28.58)	3/4 (19.05)	13 (330.2)	4 (101.6)	10.2 (4.63)
WFTF40C	4	13-3/8 (339.72)	3-1/8 (79.38)	4-7/8 (123.82)	5/8 (15.88)	7/8 (22.22)	14 (355.6)	3 (76.2)	11.1 (5.03)
WFTF40D	4	14-3/8 (365.12)	4-1/8 (104.78)	4-7/8 (123.82)	1-1/8 (28.58)	7/8 (22.22)	14 (355.6)	4 (101.6)	11.8 (5.35)
WFTF50D	5	14-3/4 (364.65)	4-1/8 (104.78)	5-1/8 (130.18)	1-1/8 (28.58)	1 (25.4)	15-1/2 (393.7)	4 (101.6)	15.2 (6.89)
WFTF60D	6	15 (381.0)	4-1/8 (104.78)	5-3/8 (136.52)	1-1/8 (28.58)	1 (25.4)	17-1/2 (444.5)	4 (101.6)	18.5 (8.39)

***40 ft. maximum total bus length*

TERMINALS
LONG BARREL COMPRESSION
CABLE TO FLAT

ALUMINUM

ACF

Pure aluminum cast compression terminal for connecting aluminum cable to flat pad. Connector barrel is filled with rubber compatible sealant and enclosed in clear plastic bags. Contact sealant is recommended on the pads. Pad holes have NEMA spacing. For use with conventional compression tooling.

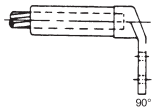

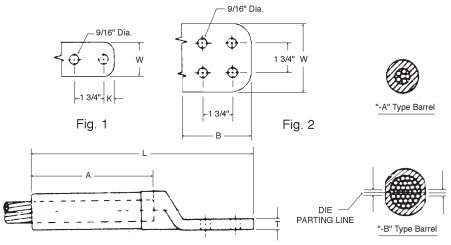

Material: Cast aluminum

Product Data & Conductor Size

CATALOG NUMBER	CONDUCTOR RANGE* CONVENTIONAL COMPRESSION INCHES (MM)	AAC	ACSR	RECOMMENDED CRIMPING DIES	FIG. NO. TYPE BARREL	DIMENSIONS INCHES (MM) L	A	B	K	T	W	APPROX. WT. EACH LBS. (KG)
ACF20B	.414-.448 (10.52-11.38)	2/0	2/0 (6/1)	EEI-11A; KEARNEY 840 OR 845; BURNDY W-K840 OR V-K840 INDEX 249; T&B TX OR 76; ALCOA 11AH;	1-A	5-7/8 (149.22)	2-1/4 (57.15)	3 (76.3)	5/8 (15.88)	7/16 (11.11)	1-1/2 (38.1)	.34 (.15)
ACF20C					2-A						3 (76.2)	.34 (.15)
ACF30B	.462-.502 (11.73-12.75)	3/0	3/0 (6/1)		1-A	5-7/8 (149.22)	2-1/4 (57.15)	3 (76.3)	5/8 (15.88)	7/16 (11.11)	1-1/2 (38.1)	.33 (.15)
ACF30C					2-A						3 (76.2)	.33 (.15)
ACF40B	.522-.575 (13.26-14.60)	4/0 - 266.8	4/0 (6/1)		1-A	5-7/8 (149.22)	2-1/4 (57.15)	3 (76.3)	5/8 (15.88)	7/16 (11.11)	1-1/2 (38.1)	.33 (.15)
ACF40C					2-A						3 (76.2)	.33 (.15)
ACF300B	.563-.630 (14.30-16.00)	266.8 - 300	4/0 (6/1) 266.8 (18/1)	EEI-13A; KEARNEY 1-1/8-OR 1-1/8-2 BURNDY INDEX 316, 655, OR 705; T&B 96 ALCOA 13AH OR 76 AH	1-A	6-11/16 (169.86)	2-3/4 (69.85)	3 (76.3)	5/8 (15.88)	7/16 (11.11)	1-11/16 (42.85)	.58 (.26)
ACF300C					2-A						3 (76.2)	.76 (.34)
ACF350B	.618-.684 (15.70-17.37)	300 - 350	266.8 (26/7) 336.4 (18/1)		1-A	6-11/16 (169.86)	2-3/4 (69.85)	3 (76.3)	5/8 (15.88)	7/16 (11.11)	1-11/16 (42.85)	.57 (.26)
ACF350C					2-A						3 (76.2)	.75 (.34)
ACF400B	.666-.741 (16.92-18.82)	336.4 - 400	336.4 (18/1) (26/7) 397.5 (18/1)		1-A	6-11/16 (169.86)	2-3/4 (69.85)	3 (76.3)	5/8 (15.88)	7/16 (11.11)	1-11/16 (42.85)	.56 (.25)
ACF400C					2-A						3 (76.2)	.74 (.34)
ACF475B	.743-.814 (18.87-20.68)	450 - 500	397.5 (18/1) (26/7) 477 (18/1)	EEI-15A; KEARNEY 1-5/16; BURNDY INDEX 318, 720; T&B 115; ALCOA 24AH	1-A	8-1/4 (209.55)	4-1/2 (114.3)	3 (76.3)	5/8 (15.88)	9/16 (14.29)	1-11/16 (42.85)	.89 (.40)
ACF475C					2-A						3 (76.2)	1.13 (.51)
ACF575B	.811-.879 (20.60-22.33)	500 - 556.5	477 (18/1) (26/7) 556.5 (18/1)		1-A	8-1/4 (209.55)	4-1/2 (114.3)	3 (76.3)	5/8 (15.88)	9/16 (14.29)	1-11/16 (42.85)	.87 (.39)
ACF575C					2-A						3 (76.2)	1.11 (.50)
ACF675B	.879-.966 (22.33-24.54)	600 - 700	477 (30/7) 556.5 (26/7) (30/7) 636 (18/1) (36/1)		1-A	8-1/4 (209.55)	4-1/2 (114.3)	3 (76.3)	5/8 (15.88)	9/16 (14.29)	1-11/16 (42.85)	.85 (.39)
ACF675C					2-A						3 (76.2)	1.09 (.49)
ACF795B	.964-1.031 (24.48-26.19)	700 - 800	636 (24/7) (26/7) 666 (24/7) (26/7) 715.5 (36/1)	KEARNEY 1-1/2; BURNDY INDEX 301, 342, 608, 722, OR 786; T&B 125; ALCOA 24AH	1-A	8-11/16 (220.66)	4-9/16 (115.87)	3 (76.3)	5/8 (15.88)	1/2 (12.7)	1-11/16 (42.85)	1.06 (.48)
ACF795C					2-A						3 (76.2)	1.30 (.59)

TERMINALS LONG BARREL COMPRESSION CABLE TO FLAT

ALUMINUM
ACF

Product Data & Conductor Size

CATALOG NUMBER	AAC KCMIL	ACSR KCMIL (STR)	O.D. (IN) STD COND. (COMPACT / TW)	COMPR. DIES	MIN. PRESS (TONS)	PAD DETAILS		LENGTH BEFORE COMPR. (IN)	NET WT. LBS. (KG)
						BOLT HOLES	WIDTH (IN.)		
ACF630N2	266.8, 300	266.8 (18/1) (26/7)	0.574 - 0.642 (0.537 - 0.570)	76AH L792	12	2	1.6	9.1	0.7 (.32)
ACF684N2	336.4, 350	300 (26/7), 336.4 (18/1)	0.642 - 0.684 (0.610 - 0.620)	20AH L719	12	2	1.7	9.3	0.8 (.36)
ACF752N2	397.5, 400	336.4 (26/7) (30/7) 397.5 (18/1) (20/7)	0.701 - 0.752 (0.660 - 0.693)	20AH L719	12	2	1.7	9.3	0.8 (.36)
ACF814N2	450 - 500	397.5 (24/7) (26/7) (30/7) 477 (18/1)	0.752 - 0.814 (0.698 - 0.740)	20AH L719	12	2	1.8	10.9	0.8 (.36)
ACF858N2	556.5	477 (24/7) (26/7)	0.814 - 0.858 (0.745 - 0.789)	24AH L722	60	2	2.0	11	1.1 (.50)
ACF929N2	600 - 650	477 (30/7) 556 (24/7) (26/7)	0.883 - 0.929 (0.825 - 0.852)	24AH L722	60	2	2.0	11	1.0 (.45)
ACF1026N4	700 - 795	556.5 (26/7) (30/7) 636 (24/7) (26/7) (30/7) 666 (24/7) (26/7)	0.927 - 1.026 (0.835 - 0.927)	27AH	60	4	3.2	11.3	1.5 (.68)
		636 (24/7) (26/7) (30/7) 666 (24/7) (26/7)	0.963 - 1.026 (0.860 - 0.927)	L725					
ACF1108N4	795–900	636 (30/19) 715.5 (24/7) (26/7) (30/19) 795 (45/7) (54/7) (26/7)	1.019 - 1.108 (0.921 - 1.010)	30AH	60	4	2.98	13.06	2.0 (.91)
		715.5 (30/19) 795 (45/7) (54/7) (26/7)	1.077 - 1.108 (0.977 - 1.108)	L727					
ACF1196N4	954–1033.5	795 (26/7) (30/19) 954 (36/1) (45/7) (54/7)	1.108 - 1.196 (1.010 - 1.084)	30AH	60	4	3.20	13.63	2.0 (.91)
	1000–1033.5	795 (30/19) 954 (45/7) (54/7)	1.140 - 1.196 (1.040 - 1.084)	L727					
ACF1263N4	1113–1200	954 (30/19) 1033.5 (45/7) (54/7) 1113 (45/7)	1.203 - 1.263 (1.092 - 1.165)	34AH L767	60	4	3.10	13.84	2.8 (1.27)
ACF1340N4	1250–1351.5	1113 (54/19) 1192.5 (45/7) (54/19)	1.289 - 1.340 (1.165 - 1.225)	34AH L767	60	4	3.33	13.97	2.7 (1.23)
ACF1386N4	1431	1192.5 (54/19) 1272 (45/7) (54/19) 1351.5 (45/7)	1.338 - 1.386 (1.225 - 1.259)	36AH L728	60	4	3.04	14.69	3.1 (1.41)
ACF1504N4	1500–1590	1351.5 (54/19) 1431 (45/7) (54/19) 1510.5 (45/7), 1590 (45/7)	1.412 - 1.504 (1.320 - 1.358)	38AH	60	4	3.51	15.19	3.5 (1.59)
ACF1545N4	1750	1510.5 (54/19) 1590 (45/7) (54/19)	1.504 - 1.545 (1.358 - 1.424)	40AH L735	60	4	3.49	16.00	4.2 (1.91)
ACF1700N4	2000	1780 (84/19), 1869 (68/7) 2034.5 (72/7), 2057 (76/19)	1.602 - 1.700 (1.445 - 1.545)	42AH	100	4	3.93	16.13	4.5 (2.04)
ACF1762N4	2250–2300	2167 (72/7) 2156 (84/19)	1.729 - 1.762 (1.545 - 1.608)	44AH	100	4	4.0	17.56	5.2 (2.36)
ACF1824N4	2500	2156 (84/19) 2312 (76/19)	1.762 - 1.824 (1.608 - 1.650)	44AH	100	4	3.93	17.94	5.2 (2.36)

Jumper terminals are prefilled with inhibitor. Pad holes have NEMA spacing.

Material: **Terminal**-Seamless Extruded Aluminum Tube
For use with conventional hex die tooling (3)
Available with 15, 45 or 90 degree angled pad.

Example: ACF1196N445 for 45 degree pad angle.

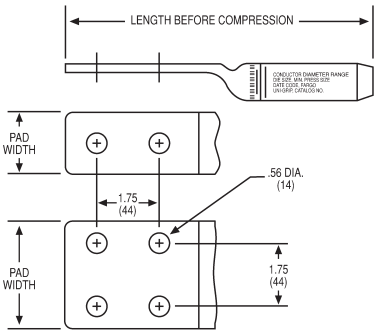

IDENTIFICATION:
CONDUCTOR DIAMETER RANGE
DIE SIZE, MIN PRESS SIZE
DATE CODE, HPS
CATALOG NO.

NOTES:
1. These terminals are also recommended for AAAC and ACAR conductors within the diameter ranges listed.
2. Terminals are pre-filled with Anderson/Fargo standard joint compound.
Consult factory for terminals pre-filled with high performance, conductive-grit compound type HTJC.
3. Terminal ACF1196N4 and smaller may be compressed with Anderson Versa-Crip tools. Consult factory for tool size and crimping procedure.
4. Terminals are EHV rated where conductor is 1 in. O.D. or larger.
5. The ACF terminals on this page replace cast terminals in the CCL series.

ALUMINUM

CCLS

TERMINALS
SHORT BARREL
COMPRESSION CABLE TO FLAT

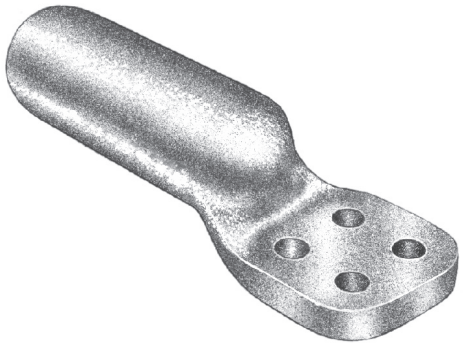

Aluminum cast, compression terminal for connecting aluminum cable to flat pad. Connector barrel is filled with rubber compatible sealant and enclosed in clear plastic bag. Contact sealant is recommended on the pads. Pad holes have NEMA spacing. Pads have contact surface on both sides. Short barrel requires less space and allows faster installation.

Material: Cast aluminum

For use with VERSA CRIMP® tooling through CCLS1300 (Die Ref. 1.844) and conventional compression tooling. Refer to Chart C-13282 on page A-34 for tool and die information.

Example: CCLS563B90

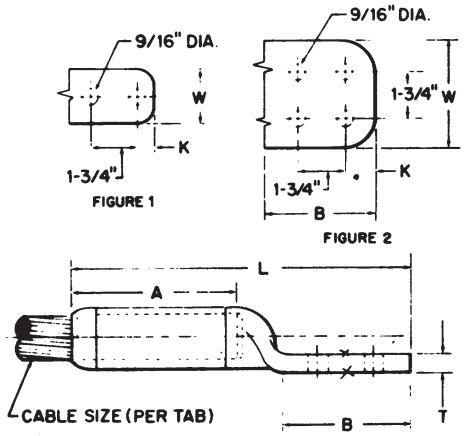

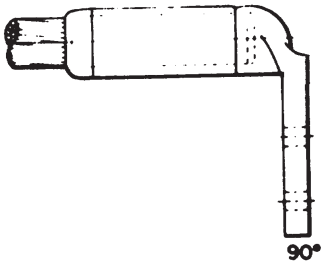

Product Data & Conductor Size

CATALOG NUMBER	FIG. NO.	CONDUCTOR RANGE AAC	CONDUCTOR RANGE ACSR	CONDUCTOR RANGE DIA.	DIE REF.	DIMENSIONS INCHES (MM) L	A	B	K	T	W	APPROX. WT. EACH LBS. (KG)
CCLS325B	1	#2 (7)	#2 (6/1), (7/1)	.292-.325 (7.42-8.26)	.640	5-7/8 (149.22)	2-1/4 (57.15)	3-1/8 (79.38)	3/8 (9.52)	5/16 (7.94)	1-1/2 (38.1)	.2 (.09)
CCLS398B	1	1/0 (7), (19)	#1 (6/1)-1/0 (6/1)	.355-.398 (9.02-10.11)	.840	6-1/2 (165.1)	2-3/4 (69.85)	3-1/8 (79.38)	3/8 (9.52)	3/8 (9.52)	1-1/2 (38.1)	.4 (.2)
CCLS398C	2					6-1/2 (165.1)	2-3/4 (69.85)	3-1/8 (79.38)	3/8 (9.52)	3/8 (9.52)	3 (76.2)	.5 (.23)
CCLS447B	1	2/0 (7), (19)	2/0 (6/1)	.414-.447 (10.52-11.35)	.840	6-1/2 (165.1)	2-3/4 (69.85)	3-1/8 (79.38)	3/8 (9.52)	3/8 (9.52)	1-1/2 (38.1)	.4 (.2)
CCLS447C	2					6-1/2 (165.1)	2-3/4 (69.85)	3-1/8 (79.38)	3/8 (9.52)	3/8 (9.52)	3 (76.2)	.5 (.23)
CCLS502B	1	3/0 (7), (19)	110.8 (12/7)-3/0 (6/1)	.464-.502 (11.78-12.75)	.840	6-1/2 (165.1)	2-3/4 (69.85)	3-1/8 (79.38)	3/8 (9.52)	3/8 (9.52)	1-1/2 (38.1)	.4 (.2)
CCLS502C	2					6-1/2 (165.1)	2-3/4 (69.85)	3-1/8 (79.38)	3/8 (9.52)	3/8 (9.52)	3 (76.2)	.5 (.23)
CCLS563B	1	4/0 (7), (19)	3/0 (6/1)-4/0 (6/1)	.502-.563 (12.75-14.30)	1.000	6-3/4 (171.45)	3 (76.2)	3-1/8 (79.38)	3/8 (9.52)	1/2 (12.7)	1-1/2 (38.1)	.4 (.2)
CCLS563C	2					6-3/4 (171.45)	3 (76.2)	3-1/8 (79.38)	3/8 (9.52)	3/8 (9.52)	3 (76.2)	.6 (.27)
CCLS642B	1	266.8 (7)-300 (61)	176.9 (12/7)-266.8 (26/7)	.586-.642 (14.88-16.31)	1.000	6-3/4 (171.45)	3 (76.2)	3-1/8 (79.38)	3/8 (9.52)	1/2 (12.7)	1-1/2 (38.1)	.4 (.2)
CCLS642C	2					6-3/4 (171.45)	3 (76.2)	3-1/8 (79.38)	3/8 (9.52)	3/8 (9.52)	3 (76.2)	.6 (.27)

Continued on next page.

VERSA-CRIMP is a registered trademark of Hubbell Incorporated.

TYPE CCLS ALUMINUM COMPRESSION CONNECTOR (CONTINUED)

Product Data & Conductor Size

CATALOG NUMBER	FIG. NO.	CONDUCTOR RANGE			DIE REF.	DIMENSIONS INCHES (MM)						APPROX. WT. EACH LBS. (KG)
		AAC	ACSR	DIA.		L	A	B	K	T	W	
CCLS684B2	1	336.4 (19) - 350 (19)	300 (26/7)	.666-.684 (16.92-17.37)	1.125	7 (177.8)	3-1/4 (82.55)	3-1/8 (79.38)	5/8 (15.88)	1/2 (12.7)	2 (50.8)	.5 (.23)
CCLS684C	2					7 (177.8)	3-1/4 (82.55)	3-1/8 (79.38)	5/8 (15.88)	1/2 (12.7)	3 (76.2)	.7 (.32)
CCLS743B2	1	397.5 (19)	336.4 (26/7) - 397.5 (18/1)	.721-.743 (18.31-18.87)	1.125	7 (177.8)	3-1/4 (82.55)	3-1/8 (79.38)	5/8 (15.88)	1/2 (12.7)	2 (50.8)	.5 (.23)
CCLS743C	2					7 (177.8)	3-1/4 (82.55)	3-1/8 (79.38)	5/8 (15.88)	1/2 (12.7)	3 (76.2)	.8 (.36)
CCLS814B2	1	477 (19) - 500 (37)	397.5 (24/7)-477 (18/1)	.772-.814 (19.61-20.68)	1.250	7-3/8 (187.32)	3-1/2 (88.9)	3-1/8 (79.38)	5/8 (15.88)	1/2 (12.7)	2 (50.8)	.7 (.32)
CCLS814C	2					7-3/8 (187.32)	3-1/2 (88.9)	3-1/8 (79.38)	5/8 (15.88)	1/2 (12.7)	2 (50.8)	.7 (.32)
CCLS883B2	1	556.5 (19) - 556.5 (37)	477 (24/7)-477 (30/7)	.846-.883 (21.49-22.43)	1.468	7-3/4 (196.85)	3-7/8 (98.42)	3-1/8 (79.38)	3/8 (9.52)	1/2 (12.7)	2 (50.8)	.8 (.36)
CCLS883C	2					7-3/4 (196.85)	3-7/8 (98.42)	3-1/8 (79.38)	3/8 (9.52)	1/2 (12.7)	3 (76.2)	.9 (.41)
CCLS953B2	1	600 (37) - 650 (37)	556.5 (18/1) - 605 (24/7)	.879-.953 (22.33-24.21)	1.468	7-3/4 (196.85)	3-7/8 (98.42)	3-1/8 (79.38)	3/8 (9.52)	1/2 (12.7)	2 (50.8)	.8 (.36)
CCLS953C	2					7-3/4 (196.85)	3-7/8 (98.42)	3-1/8 (79.38)	3/8 (9.52)	1/2 (12.7)	3 (76.2)	.9 (.41)
CCLS1031B2	1	700 (37) - 795 (61)	605 (24/7) - 666 (26/7)	.953-1.031 (24.21-26.19)	1.468	7-3/4 (196.85)	3-7/8 (98.42)	3-1/8 (79.38)	3/8 (9.52)	1/2 (12.7)	2 (50.8)	.8 (.36)
CCLS1031C	2					7-3/4 (196.85)	3-7/8 (98.42)	3-1/8 (79.38)	3/8 (9.52)	1/2 (12.7)	3 (76.2)	1.0 (.45)

Additional CCLS sizes available up to 1.824"

CONVENTIONAL COMPRESSION TOOL AND DIE INFORMATION FOR TYPE CCLS

DIE REF.	BURNDY TOOLS & DIES						ANDERSON			ALCOA TOOLS & DIES		
	INDEX	Y34A	Y35	Y48B	Y486RB	Y60B	VC TOOLS	HC-12 (U-DIE)	EP-60S (L-DIE)	12A, 12HA	60A	F1,H,H2,H2H
.640	243	A243	U243	C243		L243	VC6	HT41DM		B73AH		
.840	249	A249	U249	C249		L249	VC6	HT41DW		B74AH		
1.000	251	A251	U251	C251	F251	L251	VC6	HT41DY		B75AH		
1.125	316	A316	U316	C316	F316	L316	VC6	HT41FM		B76AH		
1.250	317		U317	C317	F317	L317	VC8	HT41FN	HT6020AH		6020AH	4420AH
1.468	261*		U261	C261	F261	L261	VC8	HT41EK	HT6024AH		6024AH	4424AH
1.625	301			C39AR	F39AR	L39ART	VC8	HT41EK	HT6027AH		6027AH	4427AH
1.844	302			C44AR	F44AR	L44ART	VC8		HT6030AH		6030AH	4430AH
2.062	479				F48AR	L48ART			HT6034AH		6034AH	4434AH
2.375	478				F46AR	L46ART			HT6038AH		6038AH	4438AH
2.625												4442AH
2.750												4444AH

**Same as 318*

NOTES:

1. *These terminals are also recommended for AAAC and ACAR conductors within the diameter ranges listed.*
2. *Terminals are pre-filled with Anderson/Fargo standard joint compound.*
   Consult factory for terminals pre-filled with high performance, conductive-grit compound type HTJC.
3. *Terminal ACF1196N4 and smaller may be compressed with Anderson Versa-Crip tools. Consult factory for tool size and crimping procedure.*

TERMINALS – SHORT BARREL COMPRESSION CABLE TO FLAT

ALUMINUM
ACFS

SA 32

Jumper terminals are prefilled with inhibitor. Pad holes have NEMA spacing.

Material: **Terminal**-Seamless Extruded Aluminum Tube. For use with conventional hex die tooling (3) Available with 15, 45 or 90 degree angled pad.

Example: ACFS1196N445 for 45 deg. pad angle.

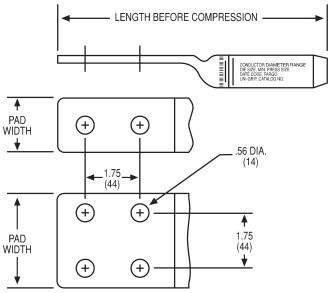

IDENTIFICATION:
CONDUCTOR DIAMETER RANGE
DIE SIZE, MIN PRESS SIZE
DATE CODE, HPS
CATALOG NO.

NOTES:
1. These terminals are also recommended for AAAC and ACAR conductors within the diameter ranges listed.
2. Terminals are pre-filled with Anderson/Fargo standard joint compound. Consult factory for terminals pre-filled with high performance, conductive-grit compound type HTJC.
3. Terminal ACF1196N4 and smaller may be compressed with Anderson Versa-Crip tools. Consult factory for tool size and crimping procedure.
4. Terminals are EHV rated where conductor is 1 in. O.D. or larger.

Product Data & Conductor Size

CATALOG NUMBER	AAC KCMIL	ACSR KCMIL (STR)	O.D. (IN) STD COND. (COMPACT / TW)	COMPR. DIES	MIN. PRESS (TONS)	PAD DETAILS		LENGTH BEFORE COMPR. (IN)	NET WT LBS. (KG)
						BOLT HOLES	WIDTH (IN.)		
ACFS814N2	450 - 500	397.5 (24/7) (26/7) (30/7) 477 (18/1)	0.752 - 0.814 (0.698 - 0.740)	20AH L719	12	2	1.8	9.4	0.7 (.32)
ACFS858N2	556.5	477 (24/7) (26/7)	0.814 - 0.858 (0.745 - 0.789)	24AH L722	60	2	2.0	9.9	0.7 (.32)
ACFS929N2	600 - 650	477 (30/7) 556 (24/7) (26/7)	0.883 - 0.929 (0.825 - 0.852)	24AH L722	60	2	2.0	9.9	0.9 (.41)
ACFS1026N4	700 - 795	556.5 (26/7) (30/7) 636 (24/7) (26/7) (30/7) 666 (24/7) (26/7)	0.927 - 1.026 (0.835 - 0.927)	27AH	60	4	3.2	10.0	1.3 (.59)
		636 (24/7) (26/7) (30/7) 666 (24/7) (26/7)	0.963 - 1.026 (0.860 - 0.927)	L725					
ACFS1108N4	795–900	636 (30/19) 715.5 (24/7) (26/7) (30/19) 795 (45/7) (54/7) (26/7)	1.019 - 1.108 (0.921 - 1.010)	30AH	60	4	2.98	11.25	1.7 (.77)
		715.5 (30/19) 795 (45/7) (54/7) (26/7)	1.077 - 1.108 (0.977 - 1.108)	L727					
ACFS1196N4	954–1033.5	795 (26/7) (30/19) 954 (36/1) (45/7) (54/7)	1.108 - 1.196 (1.010 - 1.084)	30AH	60	4	3.20	11.50	1.7 (.77)
	1000–1033.5	795 (30/19) 954 (45/7) (54/7)	1.140 - 1.196 (1.040 - 1.084)	L727					
ACFS1263N4	1113–1200	954 (30/19) 1033.5 (45/7) (54/7) 1113 (45/7)	1.203 - 1.263 (1.092 - 1.165)	34AH L767	60	4	3.10	11.84	2.4 (1.09)
ACFS1340N4	1250–1351.5	1113 (54/19) 1192.5 (45/7) (54/19)	1.289 - 1.340 (1.165 - 1.225)	34AH L767	60	4	3.33	12.22	2.4 (1.09)
ACFS1386N4	1431	1192.5 (54/19) 1272 (45/7) (54/19) 1351.5 (45/7)	1.338 - 1.386 (1.225 - 1.259)	36AH L728	60	4	3.04	12.81	2.7 (1.23)
ACFS1504N4	1500–1590	1351.5 (54/19) 1431 (45/7) (54/19) 1510.5 (45/7), 1590 (45/7)	1.412 - 1.504 (1.320 - 1.358)	38AH	60	4	3.51	13.19	3.0 (1.36)
ACFS1545N4	1750	1510.5 (54/19) 1590 (45/7) (54/19)	1.504 - 1.545 (1.358 - 1.424)	40AH L735	60	4	3.49	13.97	3.7 (1.68)
ACFS1700N4	2000	1780 (84/19), 1869 (68/7) 2034.5 (72/7), 2057 (76/19)	1.602 - 1.700 (1.445 - 1.545)	42AH	100	4	3.93	14.03	3.9 (1.77)
ACFS1762N4	2250–2300	2167 (72/7) 2156 (84/19)	1.729 - 1.762 (1.545 - 1.608)	44AH	100	4	4.0	15.31	4.5 (2.04)
ACFS1824N4	2500	2156 (84/19) 2312 (76/19)	1.762 - 1.824 (1.608 - 1.650)	44AH	100	4	3.93	15.44	4.5 (2.04)

COPPER TERMINAL CABLE TO FLAT TYPE BCL

COPPER
BCL

SA 33

Heavy duty, copper compression terminal for connecting copper cable to copper flat pad. Pad holes have NEMA spacing.

Material: CDA 110 Copper

For use with conventional compression tooling. Refer to page A-51 for tool and die information.

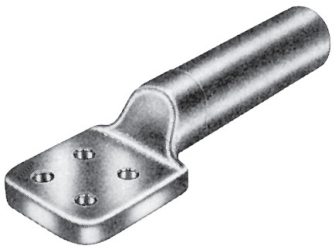

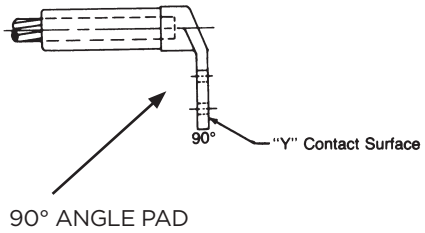

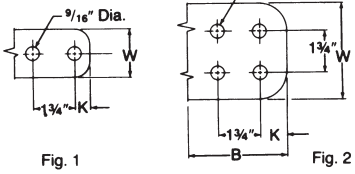

Fig. 1 Fig. 2

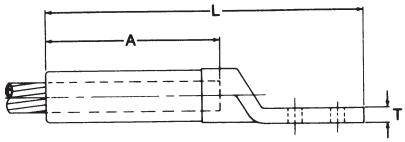

Example: BCL024BY90

Product Data & Conductor Size

CATALOG NUMBER	FIG. NO.	COPPER CONDUCTOR RANGE CABLE	COPPER CONDUCTOR RANGE DIA.	DIE REF.	DIMENSIONS INCHES (MM) L	A	B	K	T	W	APPROX. WT. EACH LBS. (KG)
BCL016B	1	#4 Str.	.232 (5.89)	.640	6 (152.4)	2 (50.8)	3-1/4 (82.55)	5/8 (15.88)	1/4 (6.35)	1-3/16 (30.16)	.5 (.2)
BCL018B	1	#2 Str.	.292 (7.42)	.640	6 (152.4)	2 (50.8)	3-1/4 (82.55)	5/8 (15.88)	1/4 (6.35)	1-3/16 (30.16)	.5 (.2)
BCL021B	1	1/0 Str.	.373 (9.47)	.840	7.13 (181.1)	2-3/4 (69.85)	3-1/4 (82.55)	5/8 (15.88)	5/16 (7.9)	1-1/2 (38.1)	1.2 (.54)
BCL022B	1	2/0 Str.	.419 (10.64)	.840	7.13 (181.1)	2-3/4 (69.85)	3-1/4 (82.55)	5/8 (15.88)	5/16 (7.9)	1-1/2 (38.1)	1.2 (.54)
BCL022C	2				7.88 (200.15)	2-3/4 (69.85)	3-1/4 (82.55)	5/8 (15.88)	5/16 (7.9)	3 (76.2)	1.7 (.77)
BCL023B	1	3/0 Str.	.470 (11.94)	.840	7.13 (181.1)	2-3/4 (69.85)	3-1/4 (82.55)	5/8 (15.88)	5/16 (7.9)	1-1/2 (38.1)	1.2 (.54)
BCL024B	1	4/0 Str.	.528 (13.41)	.840	7.13 (181.1)	2-3/4 (69.85)	3-1/4 (82.55)	5/8 (15.88)	5/16 (7.9)	1-1/2 (38.1)	1.2 (.54)
BCL024C	2				7.88 (200.15)	2-3/4 (69.85)	3-1/4 (82.55)	5/8 (15.88)	5/16 (7.9)	3 (76.2)	1.7 (.77)
BCL025B	1	250 MCM	.575 (14.60)	.840	7.13 (181.1)	2-3/4 (69.85)	3-1/4 (82.55)	5/8 (15.88)	5/16 (7.9)	1-1/2 (38.1)	1.2 (.54)
BCL025C	2				7.88 (200.15)	2-3/4 (69.85)	3-1/4 (82.55)	5/8 (15.88)	5/16 (7.9)	3 (76.2)	1.7 (.77)
BCL030B	1	300 MCM	.630 (16.0)	1.000	7.38 (187.45)	3 (76.2)	3-1/4 (82.55)	5/8 (15.88)	5/16 (7.9)	1-1/2 (38.1)	1.3 (.59)
BCL030C	2				8.06 (204.72)	3 (76.2)	3-1/4 (82.55)	5/8 (15.88)	5/16 (7.9)	3 (76.2)	1.6 (.72)
BCL035B	1	350 MCM	.681 (17.30)	1.000	7.38 (187.45)	3 (76.2)	3-1/4 (82.55)	5/8 (15.88)	5/16 (7.9)	1-1/2 (38.1)	1.3 (.59)
BCL035C	2				8.06 (204.72)	3 (76.2)	3-1/4 (82.55)	5/8 (15.88)	5/16 (7.9)	3 (76.2)	1.6 (.72)
BCL050B2	1	500 MCM	.813 (20.65)	1.125	7.88 (200.15)	3-1/2 (88.9)	3-1/4 (82.55)	5/8 (15.88)	3/8 (9.5)	1-3/4 (44.45)	1.4 (.63)
BCL050C	2				8.75 (222.25)	3-1/2 (88.9)	3-1/4 (82.55)	5/8 (15.88)	5/16 (7.9)	3 (76.2)	1.9 (.86)

Continued on next page.

TYPE BCL COPPER COMPRESSION CONNECTOR (CONTINUED)

Product Data & Conductor Size

CATALOG NUMBER	FIG. NO.	COPPER CONDUCTOR RANGE		DIE REF.	DIMENSIONS INCHES (MM)						APPROX. WT. EACH LBS. (KG)
		CABLE	DIA.		L	A	B	K	T	W	
BCL075B2	1	750 MCM	.998 (25.35)	1.312	8.63 (219.20)	4 (101.6)	3-1/4 (82.55)	5/8 (15.88)	1/2 (12.7)	2 (50.8)	2.0 (.9)
BCL075C	2				9 (228.6)	4 (101.6)	3-1/4 (82.55)	5/8 (15.88)	5/16 (7.9)	3 (76.2)	2.2 (1.0)
BCL075D	2				9.75 (247.65)	4 (101.6)	4-1/4 (107.95)	1-1/8 (25.58)	1/2 (12.7)	4 (101.6)	4.2 (1.9)
BCL100B2	1	1000 MCM	1.152 (29.26)	1.500	8.88 (225.55)	4 (101.6)	3-1/4 (82.55)	5/8 (15.88)	5/8 (15.88)	2 (50.8)	3.1 (1.4)
BCL100C	2				9 (228.6)	4 (101.6)	3-1/4 (82.55)	5/8 (15.88)	3/8 (9.5)	3 (76.2)	3.3 (1.5)
BCL100D	2				9.75 (247.65)	4 (101.6)	4-1/4 (107.95)	1-1/8 (25.58)	1/2 (12.7)	4 (101.6)	4.2 (1.9)
BCL150C	2	1500 MCM	1.412 (35.86)	2.125	10.18 (258.57)	5 (127.0)	3-1/4 (82.55)	5/8 (15.88)	5/8 (15.88)	3 (76.2)	7.5 (3.4)
BCL150D	2				11.25 (285.75)	5 (127.0)	4-1/4 (107.95)	1-1/8 (25.58)	5/8 (15.88)	4 (101.6)	9 (4.1)
BCL200C	2	2000 MCM	1.632 (41.45)	2.375	11.18 (283.97)	6 (152.4)	3-1/4 (82.55)	5/8 (15.88)	3/4 (19.05)	3 (76.2)	11 (5.0)
BCL200D	2				12.38 (314.45)	6 (152.4)	4-1/4 (107.95)	1-1/8 (25.58)	3/4 (19.05)	4 (101.6)	13 (5.9)

CONVENTIONAL COMPRESSION DIE INFORMATION

DIE INDEX	KEARNEY	ALCOA	BURNDY	T&B
.640	5/8	73AH	243	52
.840	.840 OR .849	74AH	249	76
1.000	1.000	75AH	251	
1.125	1-1/8	76AH	490, 347, 316	96
1.312	1-5/16	20AH	327, 317, 426, 300	106
1.500	1-1/2	24AH	318, 261, 608	125
1.843	K6030AH	30AH	292, 302, 352, 579	150
2.125	2-1/8	34AH	422, 575	160, 161
2.375	2-3/8	38AH	478, 728	189
2.937	2-15/16	48AH		250

NOTES:
1. Crimps should overlap and start from the inside working outward with the last crimp extending past the end of the connector.
2. It is recommended that a light coat of lubricant (such as Anderson's I55 grease) be applied to the crimping face of the dies.

SUBSTATION CONNECTORS

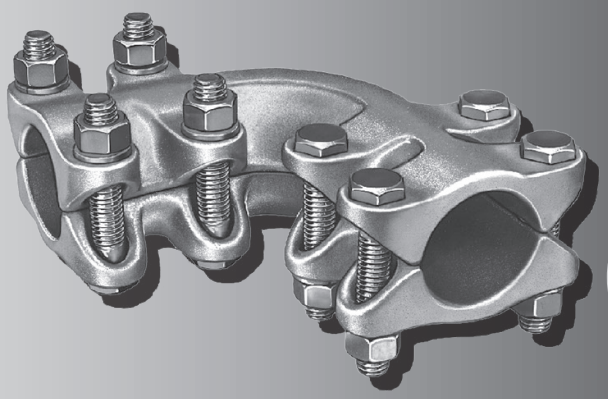

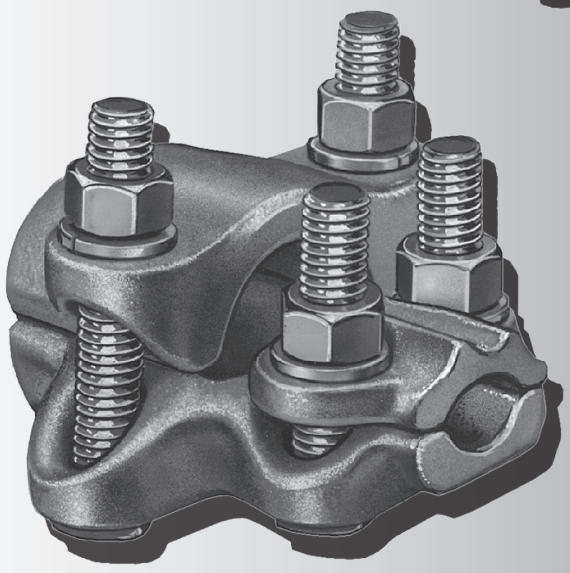

SECTION SB

COUPLERS

Aluminum Bolted
Aluminum Weldment
Bronze Bolted

COUPLERS

BOLTED/ALUMINUM

AL45 ..... ANGLE, TUBE TO TUBE SB-2
AL90 ..... ANGLE, TUBE TO TUBE SB-1
ASTC ..... STRAIGHT, TUBE TO CABLE SB-4
ASTT ..... STRAIGHT, TUBE TO TUBE SB-3

BOLTED/BRONZE

L45 ..... ANGLE, TUBE TO TUBE SB-7
L90 ..... ANGLE, TUBE TO TUBE SB-6
STC8 ..... TUBE TO CABLE SB-10
STTH ..... TUBE TO TUBE SB-8

WELDMENT/ALUMINUM

WC ..... TUBE TO TUBE SB-13
WCI ..... TUBE TO TUBE SB-14
WLI45 ..... ANGLE, TUBE TO TUBE SB-16
WLI90 ..... ANGLE, TUBE TO TUBE SB-15

COUPLERS
BOLTED ALUMINUM ANGLED TUBE TO TUBE

ALUMINUM
AL90

Aluminum alloy angle coupler for connecting aluminumaluminum or aluminum-copper tubing at 90 degrees. Clamping bolts have hex-stops for one-wrench installation. Contact sealant is recommended.

Material: **Castings**—356-T6 aluminum alloy
Hardware—aluminum alloy

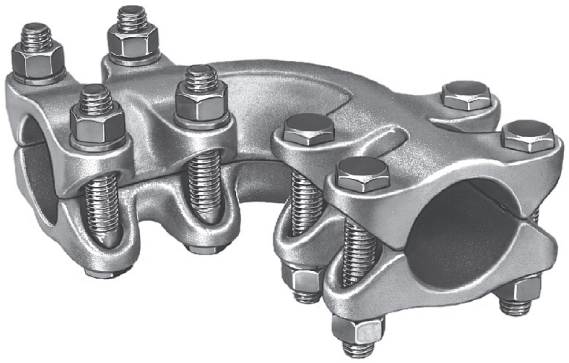

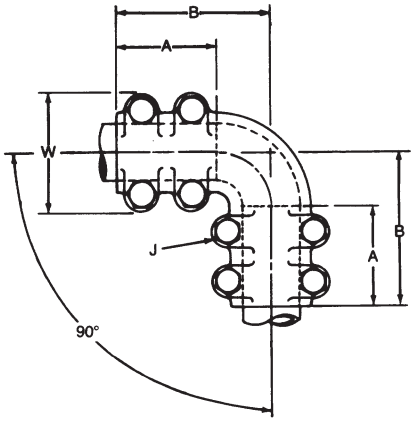

SB 1

Product Data & Conductor Size

CATALOG NUMBER	CONDUCTOR SIZE TUBING IPS/EHIPS		DIMENSIONS INCHES (MM)				APPROX. WT. EACH LBS. (KG)
	MAIN	TAP	A	B	W	J	
AL900606	3/4	3/4	2-1/2 (63.5)	3-15/16 (100.01)	3 (76.2)	1/2 (12.7)	1.8 (.82)
AL901010	1	1	2-3/4 (69.85)	4-7/16 (112.71)	3-1/4 (82.55)	1/2 (12.7)	2.2 (1.0)
AL901212	1-1/4	1-1/4	3 (76.2)	4-3/4 (120.65)	3-5/8 (92.08)	1/2 (12.7)	3.6 (1.63)
AL901414	1-1/2	1-1/2	3-5/16 (84.14)	5 (127.0)	3-7/8 (98.42)	1/2 (12.7)	4.5 (2.04)
AL902020	2	2	3-9/16 (90.49)	5-1/2 (139.7)	4-3/8 (111.12)	1/2 (12.7)	5.6 (2.54)
AL902424	2-1/2	2-1/2	3-7/8 (98.42)	5-3/4 (146.05)	4-7/8 (123.82)	1/2 (12.7)	8.4 (3.81)
AL903030	3	3	4-1/8 (104.78)	6-3/8 (161.92)	5-7/8 (149.22)	5/8 (15.88)	10.7 (4.85)
AL903434	3-1/2	3-1/2	4-3/8 (111.12)	6-7/8 (174.62)	6-3/8 (161.92)	5/8 (15.88)	12.0 (5.44)
AL904040	4	4	4-1/4 (107.95)	7-15/16 (201.61)	7 (177.8)	5/8 (15.88)	16.0 (7.26)
AL905050	5	5	5 (127.0)	9 (228.6)	8 (203.2)	5/8 (15.88)	18.0 (8.16)
AL906060	6	6	6 (152.4)	10-9/16 (268.29)	9-1/8 (231.78)	5/8 (15.88)	20.0 (9.07)

ALUMINUM

AL45

COUPLERS
BOLTED ALUMINUM ANGLED TUBE TO TUBE

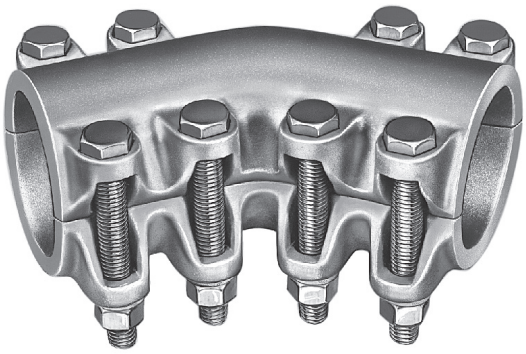

Aluminum alloy angle coupler for connecting aluminum-aluminum or aluminum-copper tubing at 45 degrees. Clamping bolts have hex-stops for one-wrench installation. Contact sealant is recommended.

Material: **Castings**—356-T6 aluminum alloy
Hardware—aluminum alloy

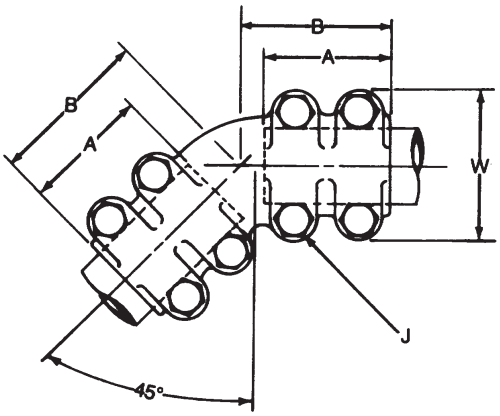

Product Data & Conductor Size

CATALOG NUMBER	CONDUCTOR SIZE TUBING IPS/EHIPS		DIMENSIONS INCHES (MM)				APPROX. WT. EACH LBS. (KG)
	MAIN	TAP	A	B	W	J	
AL450606	3/4	3/4	2-1/2 (63.5)	2-15/16 (74.61)	3 (76.2)	1/2 (12.7)	1.8 (.82)
AL451010	1	1	2-7/8 (73.02)	3-3/8 (85.72)	3-1/4 (82.55)	1/2 (12.7)	2.2 (1.0)
AL451212	1-1/4	1-1/4	3 (76.2)	3-9/16 (90.49)	3-5/8 (92.08)	1/2 (12.7)	3.6 (1.63)
AL451414	1-1/2	1-1/2	3-3/8 (85.72)	4 (101.6)	3-7/8 (98.42)	1/2 (12.7)	4.5 (2.04)
AL452020	2	2	3-1/2 (88.9)	4-3/8 (111.12)	4-3/8 (111.12)	1/2 (12.7)	5.6 (2.54)
AL452424	2-1/2	2-1/2	3-3/4 (95.25)	4-3/4 (120.65)	4-7/8 (123.82)	1/2 (12.7)	8.4 (3.81)
AL453030	3	3	4-1/8 (104.78)	5 (127.0)	5-7/8 (149.22)	5/8 (15.88)	10.7 (4.85)
AL453434	3-1/2	3-1/2	4-1/4 (107.95)	5-9/16 (141.29)	6-3/8 (161.92)	5/8 (15.88)	12.0 (5.44)
AL454040	4	4	4-1/4 (107.95)	5-11/16 (144.46)	7 (177.8)	5/8 (15.88)	16.0 (7.26)
AL456060	6	6	6 (152.4)	7-7/8 (200.02)	9-1/8 (231.78)	5/8 (15.88)	20.0 (9.07)

COUPLERS
BOLTED ALUMINUM STRAIGHT TUBE TO TUBE

ALUMINUM
ASTT

Aluminum alloy, tubing to tubing, straight coupler for connecting aluminum-aluminum or aluminum-copper conductor combinations. Clamping bolts have hex-stops for one-wrench installation. Contact sealant is recommended.

Material: **Castings**—356-T6 aluminum alloy
Hardware—aluminum alloy

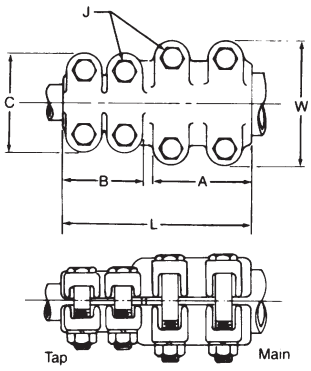

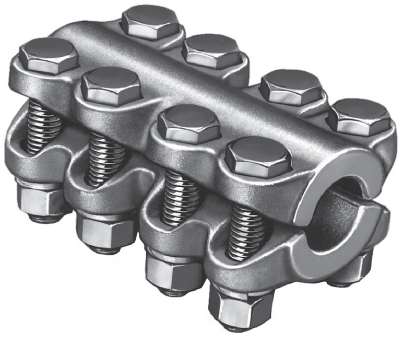

SB 3

Product Data & Conductor Size

CATALOG NUMBER	CONDUCTOR RANGE TUBING IPS/EHIPS		DIMENSIONS INCHES (MM)						APPROX. WT. EACH LBS. (KG)
	MAIN	TAP	L	A	B	W	C	J	
ASTT0606	3/4	3/4	5-1/4 (133.35)	2-1/2 (63.5)	2-1/2 (63.5)	3 (76.2)	3 (76.2)	1/2 (12.7)	1.1 (.50)
ASTT1010	1	1	5-3/4 (146.05)	2-3/4 (69.85)	2-3/4 (69.85)	3-1/4 (82.55)	3-1/4 (82.55)	1/2 (12.7)	1.5 (.68)
ASTT1212	1-1/4	1-1/4	6-1/4 (158.75)	3 (76.2)	3 (76.2)	3-5/8 (92.08)	3-5/8 (92.08)	1/2 (12.7)	2.4 (1.09)
ASTT1414	1-1/2	1-1/2	6-3/4 (171.45)	3-1/4 (82.55)	3-1/4 (82.55)	3-7/8 (98.42)	3-7/8 (98.42)	1/2 (12.7)	2.8 (1.27)
ASTT2010	2	1	6-3/4 (171.45)	3-1/2 (88.9)	2-3/4 (69.85)	4-3/8 (111.12)	3-1/4 (82.55)	1/2 (12.7)	1.8 (.82)
ASTT2012	2	1-1/4	6-7/8 (174.62)	3-1/2 (88.9)	3 (76.2)	4-3/8 (111.12)	3-5/8 (92.08)	1/2 (12.7)	2.7 (1.22)
ASTT2014	2	1-1/2	7-1/8 (180.98)	3-1/2 (88.9)	3-1/4 (82.55)	4-3/8 (111.12)	3-7/8 (98.42)	1/2 (12.7)	3.2 (1.45)
ASTT2020	2	2	7-1/4 (184.15)	3-1/2 (88.9)	3-1/2 (88.9)	4-3/8 (111.12)	4-3/8 (111.12)	1/2 (12.7)	3.4 (1.54)
ASTT2414	2-1/2	1-1/2	7-1/2 (190.5)	3-3/4 (95.25)	3-1/4 (82.55)	4-7/8 (123.82)	3-7/8 (98.42)	1/2 (12.7)	3.3 (1.50)
ASTT2420	2-1/2	2	7-3/8 (187.32)	3-3/4 (95.25)	3-1/2 (88.9)	4-7/8 (123.82)	4-3/8 (111.12)	1/2 (12.7)	3.5 (1.59)
ASTT2424	2-1/2	2-1/2	7-3/4 (196.85)	3-3/4 (95.25)	3-3/4 (95.25)	5-1/4 (133.35)	5-1/4 (133.35)	1/2 (12.7)	3.7 (1.69)
ASTT3020	3	2	8 (203.2)	4 (101.6)	3-1/4 (82.55)	5-1/2 (133.35)	4-3/8 (111.12)	1/2 (12.7)	3.9 (1.77)
ASTT3024	3	2-1/2	8-1/4 (209.55)	4 (101.6)	3-1/2 (88.9)	5-1/2 (133.35)	4-7/8 (123.82)	1/2 (12.7)	4.0 (1.81)
ASTT3030	3	3	8-1/4 (209.55)	4 (101.6)	3-3/4 (95.25)	5-7/8 (149.22)	5-7/8 (149.22)	1/2 (12.7)	6.0 (2.72)
ASTT3420	3-1/2	2	8 (203.2)	4-1/4 (107.95)	4 (101.6)	6 (152.4)	4-3/8 (111.12)	1/2 (12.7)	4.5 (2.04)
ASTT3430	3-1/2	3	8-3/4 (222.25)	4-1/4 (107.95)	4 (101.6)	6-3/8 (161.92)	5-7/8 (149.22)	5/8 (15.88)	6.4 (2.90)
ASTT3434	3-1/2	3-1/2	8-3/4 (222.25)	4-1/4 (107.95)	4-1/4 (107.95)	6-3/8 (161.92)	6-3/8 (161.92)	5/8 (15.88)	7.6 (3.45)
ASTT4030	4	3	8-3/4 (222.25)	4-1/4 (107.95)	4 (101.6)	7 (177.8)	5-7/8 (149.22)	5/8 (15.88)	7.6 (3.45)
ASTT4034	4	3-1/2	9 (228.6)	4-1/4 (107.95)	4-1/4 (107.95)	7 (177.8)	6-3/8 (161.92)	5/8 (15.88)	8.1 (3.67)
ASTT4040	4	4	8-3/4 (222.25)	4-1/4 (107.95)	4-1/4 (107.95)	7 (177.8)	7 (177.8)	5/8 (15.88)	9.7 (4.40)
ASTT5050	5	5	10-1/4 (260.35)	5 (127)	5 (127)	8 (203.2)	8 (203.2)	5/8 (15.88)	10.6 (4.81)
ASTT6060	6	6	12 (304.8)	6 (152.4)	6 (152.4)	9-1/8 (231.78)	9-1/8 (231.78)	5/8 (15.88)	12 (5.44)

ALUMINUM

ASTC

COUPLERS
BOLTED ALUMINUM STRAIGHT TUBE TO CABLE

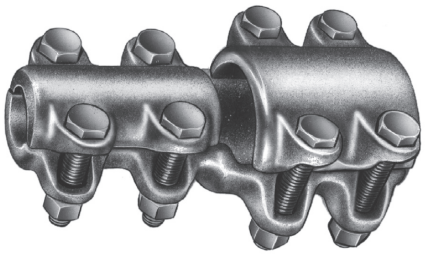

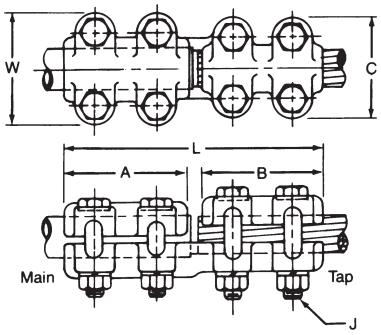

Aluminum alloy, cable to tubing, straight coupler for connecting aluminum—aluminum or aluminum-copper conductor combinations. Clamping bolts have hex-stops for one-wrench installation. Contact sealant is recommended.

Material: **Castings**—356-T6 aluminum alloy
Hardware—aluminum alloy

SB 4

Product Data & Conductor Size

CATALOG NUMBER	CONDUCTOR RANGE				DIMENSIONS INCHES (MM)						APPROX. WT. EACH LBS. (KG)
	TUBING MAIN IPS/EHIPS	CABLE TAP									
		AAC	ACSR	DIA.	L	A	B	W	C	J	
*ASTC066	3/4	#4-250 MCM	#4-4/0 Str.	.232-.575 (5.89-14.60)	5-3/4 (146.05)	2-1/2 (63.5)	3 (76.2)	3 (76.2)	2-1/2 (63.5)	1/2 (12.7)	1.0 (.45)
ASTC067	3/4	250-400 MCM	4/0-336.4 MCM	.563-.744 (14.30-18.90)	6 (152.4)	2-1/2 (63.5)	3 (76.2)	3 (76.2)	2-1/2 (63.5)	1/2 (12.7)	1.1 (.50)
ASTC069	3/4	350-600 MCM	336.4-477 MCM	.681-.893 (17.30-22.68)	6-1/4 (158.75)	2-1/2 (63.5)	3-1/4 (82.55)	3 (76.2)	2-3/4 (69.85)	1/2 (12.7)	1.2 (.54)
*ASTC106	1	#4-250 MCM	#4-4/0 Str.	.232-.575 (5.89-14.60)	6-1/4 (158.75)	2-3/4 (69.85)	3 (76.2)	3-1/4 (82.55)	2-1/2 (63.5)	1/2 (12.7)	1.1 (.50)
ASTC107	1	250-400 MCM	4/0-336.4 MCM	.563-.744 (14.30-18.90)	6-1/4 (158.75)	2-3/4 (69.85)	3 (76.2)	3-1/4 (82.55)	2-1/2 (63.5)	1/2 (12.7)	1.2 (.54)
ASTC109	1	350-600 MCM	336.4-477 MCM	.681-.893 (17.30-22.68)	6-1/2 (165.1)	2-3/4 (69.85)	3-1/4 (82.55)	3-1/4 (82.55)	2-3/4 (69.85)	1/2 (12.7)	1.4 (.64)
ASTC1011	1	600-900 MCM	556.5-795 MCM	.870-1.108 (22.10-28.14)	6-3/8 (161.92)	2-3/4 (69.85)	3-1/2 (88.9)	3-1/4 (82.55)	3 (76.2)	1/2 (12.7)	1.7 (.77)
*ASTC126	1-1/4	#4-250 MCM	#4-4/0 MCM	.232-.575 (5.89-14.60)	6-5/8 (168.28)	3 (76.2)	3 (76.2)	3-5/8 (92.08)	2-1/2 (63.5)	1/2 (12.7)	1.2 (.54)
ASTC127	1-1/4	250-400 MCM	4/0-336.4 MCM	.563-.744 (14.30-18.90)	6-1/2 (165.1)	3 (76.2)	3 (76.2)	3-5/8 (92.08)	2-1/2 (63.5)	1/2 (12.7)	1.3 (.59)
ASTC129	1-1/4	350-600 MCM	336.4-477 MCM	.681-.893 (17.30-22.68)	6-3/4 (171.45)	3 (76.2)	3-1/4 (82.55)	3-5/8 (92.08)	2-3/4 (69.85)	1/2 (12.7)	1.6 (.72)
ASTC1211	1-1/4	600-900 MCM	556.5-795 MCM	.870-1.108 (22.10-28.14)	7 (177.8)	3 (76.2)	3-1/2 (88.9)	3-5/8 (92.08)	3 (76.2)	1/2 (12.7)	1.9 (.86)
*ASTC146	1-1/2	#4-250 MCM	#4-4/0 MCM	.232-.575 (5.89-14.60)	6-3/4 (171.45)	3-1/4 (82.55)	3 (76.2)	3-7/8 (98.42)	2-1/2 (63.5)	1/2 (12.7)	1.2 (.54)
ASTC147	1-1/2	250-400 MCM	4/0-336.4 MCM	.563-.744 (14.30-18.90)	6-3/4 (171.45)	3-1/4 (82.55)	3 (76.2)	3-7/8 (98.42)	2-1/2 (63.5)	1/2 (12.7)	1.3 (.59)
ASTC149	1-1/2	350-600 MCM	336.4-477 MCM	.681-.893 (17.30-22.68)	7 (177.8)	3-1/4 (82.55)	3-1/4 (82.55)	3-7/8 (98.42)	2-3/4 (69.85)	1/2 (12.7)	1.5 (.68)
ASTC1411	1-1/2	600-900 MCM	556.5-795 MCM	.870-1.108 (22.10-28.14)	7-1/4 (184.15)	3-1/4 (82.55)	3-1/2 (88.9)	3-7/8 (98.42)	3 (76.2)	1/2 (12.7)	2.0 (.91)
ASTC1413	1-1/2	900-1250 MCM	715.5-1113 MCM	1.081-1.295 (27.46-32.84)	7-1/2 (190.5)	3-1/4 (82.55)	3-3/4 (95.25)	3-7/8 (98.42)	3-1/4 (82.55)	1/2 (12.7)	2.4 (1.09)

** Furnished with reversible cable caps.*

Continued on next page.

COUPLERS BOLTED ALUMINUM STRAIGHT TUBE TO CABLE (CONTINUED)

Product Data & Conductor Size

CATALOG NUMBER	CONDUCTOR RANGE				DIMENSIONS INCHES (MM)						APPROX. WT. EACH LBS. (KG)
	TUBING MAIN IPS/EHIPS	CABLE TAP									
		AAC	ACSR	DIA.	L	A	B	W	C	J	
ASTC207	2	250-400 MCM	4/0-336.4 MCM	.563-.744 (14.30-18.90)	6-7/8 (174.62)	3-1/2 (88.9)	3 (76.2)	4-3/8 (111.12)	2-1/2 (63.5)	1/2 (12.7)	1.5 (.68)
ASTC209	2	350-600 MCM	336.4-477 MCM	.681-.893 (17.30-22.68)	7-1/4 (184.15)	3-1/2 (88.9)	3-1/4 (82.55)	4-3/8 (111.12)	2-3/4 (69.85)	1/2 (12.7)	1.6 (.72)
ASTC2011	2	600-900 MCM	556.5-795 MCM	.870-1.108 (22.10-28.14)	7-1/2 (190.5)	3-1/2 (88.9)	3-1/2 (88.9)	4-3/8 (111.12)	3 (76.2)	1/2 (12.7)	2.3 (1.04)
ASTC2013	2	900-1250 MCM	715.5-1113 MCM	1.081-1.293 (27.46-32.84)	7-3/4 (196.85)	3-1/2 (88.9)	3-3/4 (95.25)	4-3/8 (111.12)	3-1/4 (82.55)	1/2 (12.7)	2.6 (1.18)
ASTC247	2-1/2	250-400 MCM	4/0-336.4 MCM	.563-.744 (14.30-18.90)	7-1/4 (184.15)	3-3/4 (95.25)	3 (76.2)	4-7/8 (123.82)	2-1/2 (63.5)	1/2 (12.7)	1.8 (.82)
ASTC249	2-1/2	350-600 MCM	336.4-477 MCM	.681-.893 (17.30-22.68)	7-1/2 (190.5)	3-3/4 (95.25)	3-1/4 (82.55)	4-7/8 (123.82)	2-3/4 (69.85)	1/2 (12.7)	1.9 (.86)
ASTC2411	2-1/2	600-900 MCM	556.5-795 MCM	.870-1.108 (22.10-28.14)	7-3/4 (196.85)	3-3/4 (95.25)	3-1/2 (88.9)	4-7/8 (123.82)	3 (76.2)	1/2 (12.7)	2.6 (1.18)
ASTC2413	2-1/2	900-1250 MCM	715.5-1113 MCM	1.081-1.293 (27.46-32.84)	8-1/8 (206.38)	3-3/4 (95.25)	3-3/4 (95.25)	4-7/8 (123.82)	3-1/4 (82.55)	1/2 (12.7)	3.0 (1.36)
ASTC2415	2-1/2	1250-1600 MCM	1113-1272 MCM	1.289-1.459 (32.74-37.06)	8-1/2 (206.38)	3-3/4 (95.25)	4-1/4 (107.95)	5-1/4 (133.35)	3-3/4 (95.25)	5/8 (15.88)	3.4 (1.54)
ASTC307	3	250-400 MCM	4/0-336.4 MCM	.563-.744 (14.30-18.90)	7-1/2 (190.5)	4 (101.6)	3 (76.2)	5-1/2 (139.7)	2-1/2 (63.5)	1/2 (12.7)	2.2 (1.0)
ASTC309	3	350-600 MCM	336.4-477 MCM	.681-.893 (17.30-22.68)	7-3/4 (196.85)	4 (101.6)	3-1/4 (82.55)	5-1/2 (139.7)	2-3/4 (69.85)	1/2 (12.7)	2.3 (1.04)
ASTC3011	3	600-900 MCM	556.5-795 MCM	.870-1.108 (22.10-28.14)	8 (203.2)	4 (101.6)	3-1/2 (88.9)	5-1/2 (139.7)	3 (76.2)	1/2 (12.7)	2.9 (1.32)
ASTC3013	3	900-1250 MCM	715.5-1113 MCM	1.081-1.293 (27.46-32.84)	8-1/4 (209.55)	4 (101.6)	3-3/4 (95.25)	5-1/2 (139.7)	3-1/4 (82.55)	1/2 (12.7)	3.2 (1.45)
ASTC3015	3	1250-1600 MCM	1113-1272 MCM	1.289-1.459 (32.74-37.06)	8-7/8 (225.42)	4 (101.6)	4-1/4 (107.95)	5-7/8 (149.22)	3-3/4 (95.25)	5/8 (15.88)	3.6 (1.63)
ASTC349	3-1/2	350-600 MCM	336.4-477 MCM	.681-.893 (17.30-22.68)	8-1/8 (206.38)	4-1/4 (107.95)	3-1/4 (82.55)	6 (152.4)	2-3/4 (69.85)	1/2 (12.7)	2.7 (1.22)
ASTC3411	3-1/2	600-900 MCM	556.5-795 MCM	.870-1.108 (22.10-28.14)	8-1/4 (209.55)	4-1/4 (107.95)	3-1/2 (88.9)	6 (152.4)	3 (76.2)	1/2 (12.7)	3.1 (1.41)
ASTC3413	3-1/2	900-1250 MCM	715.5-1113 MCM	1.081-1.293 (27.46-32.84)	8-3/4 (222.25)	4-1/4 (107.95)	3-3/4 (95.25)	6 (152.4)	3-1/4 (82.55)	1/2 (12.7)	3.4 (1.54)
ASTC3415	3-1/2	1250-1600 MCM	1113-1272 MCM	1.289-1.459 (32.74-37.06)	9-1/8 (231.78	4-1/4 (107.95)	4-1/4 (107.95)	6-3/8 (161.92)	3-3/4 (95.25)	5/8 (15.88)	3.9 (1.77)
ASTC409	4	350-600 MCM	336.4-477 MCM	.681-.893 (17.30-22.68)	8-1/8 (206.38)	4-1/4 (107.95)	3-1/4 (82.55)	6-5/8 (168.28)	2-3/4 (69.85)	1/2 (12.7)	3.7 (1.68)
ASTC4011	4	600-900 MCM	556.5-795 MCM	.870-1.108 (22.10-28.14)	8-1/4 (209.55)	4-1/4 (107.95)	3-1/2 (88.9)	6-5/8 (168.28)	3 (76.2)	1/2 (12.7)	4.3 (1.95)
ASTC4013	4	900-1250 MCM	715.5-1113 MCM	1.081-1.293 (27.46-32.84)	8-5/8 (219.08)	4-1/4 (107.95)	3-3/4 (95.25)	6-5/8 (168.28)	3-1/4 (82.55)	1/2 (12.7)	4.5 (2.04)
ASTC4015	4	1250-1600 MCM	1113-1272 MCM	1.289-1.459 (32.74-37.06)	9-1/8 (231.78)	4-1/4 (107.95)	4-1/4 (107.95)	7 (177.8)	3-3/4 (95.25)	5/8 (15.88)	5.0 (2.27)
ASTC4016	4	1500-2000 MCM	1272-1590 MCM	1.382-1.632 (35.10-41.45)	9-3/8 (238.12)	4-1/4 (107.95)	4-1/2 (114.3)	7 (177.8)	4 (101.6)	5/8 (15.88)	5.5 (2.49)

BRONZE

L90

COUPLERS
BOLTED BRONZE ANGLED
TUBE TO TUBE

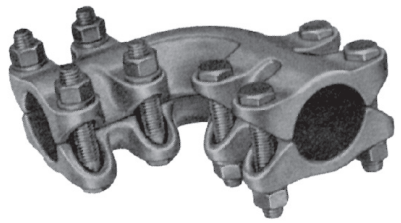

Bronze alloy coupler for connecting copper tubular bus at 90 degrees. Clamping bolts have hex-stops for one-wrench installation.

Material: **Castings**—bronze alloy
Hardware—silicon bronze or stainless steel

SB 6

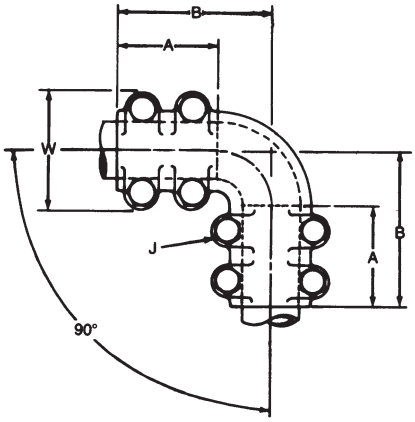

Product Data & Conductor Size

CATALOG NUMBER	COPPER CONDUCTOR SIZE TUBING IPS		DIMENSIONS INCHES (MM)				APPROX. WT. EACH LBS. (KG)
	MAIN	TAP	A	B	W	J	
L900606	3/4	3/4	2-1/8 (53.98)	3-1/16 (77.79)	2-15/16 (74.61)	1/2 (12.7)	3.6 (1.63)
L901010	1	1	2-5/16 (58.74)	3-3/4 (95.25)	3-3/16 (80.96)	1/2 (12.7)	5.0 (2.27)
L901212	1-1/4	1-1/4	2-3/4 (69.85)	4-3/4 (120.65)	3-9/16 (90.49)	1/2 (12.7)	7.2 (3.26)
L901414	1-1/2	1-1/2	2-7/8 (73.02)	4-7/8 (123.82)	3-13/16 (96.84)	1/2 (12.7)	9.1 (4.13)
L902020	2	2	3-1/4 (82.55)	5-3/8 (136.52)	4-1/2 (114.3)	1/2 (12.7)	11.3 (5.12)
L902424	2-1/2	2-1/2	3-5/8 (92.08)	6-1/4 (158.75)	4-3/4 (120.65)	1/2 (12.7)	16.8 (7.62)
L902424	3	3	3-3/4 (95.25)	6-13/16 (173.04)	5-7/8 (149.22)	5/8 (15.88)	21.5 (9.75)
L903434	3-1/2	3-1/2	3-5/8 (92.08)	6-1/2 (165.1)	6-5/16 (160.34)	5/8 (15.88)	24.0 (10.89)

COUPLERS
BOLTED BRONZE ANGLED
TUBE TO TUBE

BRONZE
L45

Bronze alloy coupler for connecting copper tubular bus at 45 degrees. Clamping bolts have hex-stops for one-wrench installation.

Material: **Castings**—bronze alloy
Hardware—silicon bronze or stainless steel

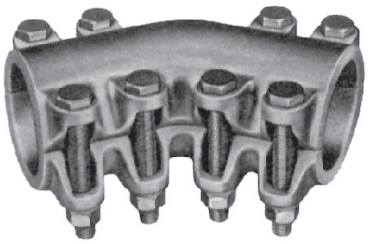

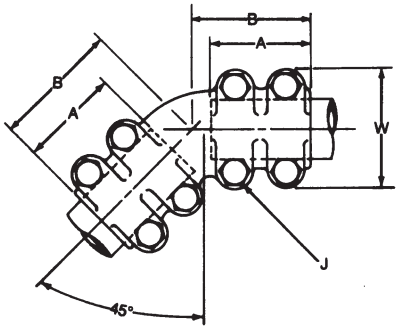

SB 7

Product Data & Conductor Size

CATALOG NUMBER	COPPER CONDUCTOR SIZE TUBING IPS		DIMENSIONS INCHES (MM)				APPROX. WT. EACH LBS. (KG)
	MAIN	TAP	A	B	W	J	
L450606	3/4	3/4	2-1/2 (63.5)	3 (76.2)	3 (76.2)	1/2 (12.7)	3.6 (1.63)
L451010	1	1	2-7/8 (73.02)	3-3/8 (85.72)	3-1/4 (82.55)	1/2 (12.7)	5.0 (2.27)
L451212	1-1/4	1-1/4	2-3/4 (69.85)	3-1/2 (88.9)	3-9/16 (90.49)	1/2 (12.7)	7.2 (3.26)
L451414	1-1/2	1-1/2	3 (76.2)	3-13/16 (96.84)	3-7/8 (98.42)	1/2 (12.7)	9.1 (4.13)
L452020	2	2	3-3/8 (85.72)	4-1/16 (103.19)	4-1/2 (114.3)	1/2 (12.7)	11.3 (5.12)
L452424	2-1/2	2-1/2	3-7/8 (98.42)	4-1/2 (114.3)	4-3/4 (120.65)	1/2 (12.7)	16.8 (7.62)
L453030	3	3	3-1/2 (88.9)	4-11/16 (119.06)	5-13/16 (147.64)	5/8 (15.88)	21.5 (9.75)
L453434	3-1/2	3-1/2	3-5/8 (92.08)	4-3/4 (120.65)	6-5/16 (160.34)	5/8 (15.88)	24.0 (10.89)

BRONZE

STTH

COUPLERS BOLTED BRONZE TUBE TO TUBE

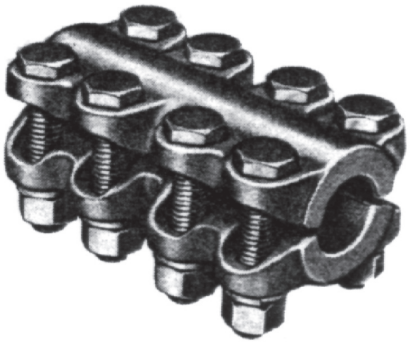

Bronze alloy, heavy duty coupler for connecting copper tubular bus. Clamping bolts have hex-stops for one-wrench installation.

Material: **Castings**—bronze alloy
Hardware—silicon bronze or stainless steel

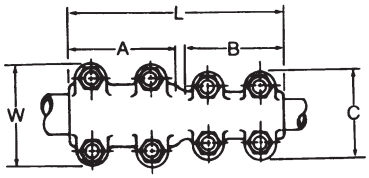

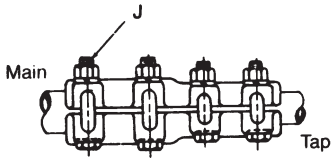

Product Data & Conductor Size

CATALOG NUMBER	COPPER CONDUCTOR SIZE TUBING IPS		DIMENSIONS INCHES (MM)						APPROX. WT. EACH LBS. (KG)
	MAIN	TAP	L	A	B	W	C	J	
STTH0604	3/4	1/2	5-1/4 (133.35)	2-1/2 (63.5)	2-1/2 (63.5)	3 (76.2)	2-3/4 (69.85)	1/2 (12.7)	2.3 (1.04)
STTH0606	3/4	3/4	5 (127.0)	2-1/2 (63.5)	2-1/2 (63.5)	3 (76.2)	3 (76.2)	1/2 (12.7)	2.5 (1.13)
STTH1006	1	3/4	5-1/4 (133.35)	2-1/2 (63.5)	2-1/2 (63.5)	3-1/4 (82.55)	3 (76.2)	1/2 (12.7)	3.3 (1.50)
STTH1010	1	1	5 (127.0)	2-1/2 (63.5)	2-1/2 (63.5)	3-1/4 (82.55)	3-1/4 (82.55)	1/2 (12.7)	3.8 (1.72)
STTH1206	1-1/4	3/4	5-1/2 (139.7)	2-3/4 (69.85)	2-1/2 (63.5)	3-5/8 (92.08)	3 (76.2)	1/2 (12.7)	3.3 (1.50)
STTH1210	1-1/4	1	5-3/8 (136.52)	2-3/4 (69.85)	2-1/2 (63.5)	3-5/8 (92.08)	3-1/4 (82.55)	1/2 (12.7)	4.9 (2.22)
STTH1212	1-1/4	1-1/4	5-5/8 (142.88)	2-3/4 (69.85)	2-3/4 (69.85)	3-5/8 (92.08)	3-5/8 (92.08)	1/2 (12.7)	6.1 (2.77)
STTH1406	1-1/2	3/4	5-1/2 (139.7)	2-3/4 (69.85)	2-1/2 (63.5)	3-7/8 (98.42)	3 (76.2)	1/2 (12.7)	3.8 (1.72)
STTH1410	1-1/2	1	5 (127.0)	2-3/8 (60.32)	2-3/8 (60.32)	3-7/8 (98.42)	3-1/4 (82.55)	1/2 (12.7)	4.1 (1.86)
STTH1412	1-1/2	1-1/4	5-5/8 (142.88)	2-3/4 (69.85)	2-3/4 (69.85)	3-7/8 (98.42)	3-5/8 (92.08)	1/2 (12.7)	6.4 (2.90)
STTH1414	1-1/2	1-1/2	5-5/8 (142.88)	2-5/8 (66.68)	2-5/8 (66.68)	3-3/4 (95.25)	3-3/4 (95.25)	1/2 (12.7)	7.0 (3.18)
STTH2006	2	3/4	5 (127.0)	2-1/4 (57.15)	2-3/8 (60.32)	4-1/2 (114.3)	3 (76.2)	1/2 (12.7)	4.2 (1.91)
STTH2010	2	1	5 (127.0)	2-3/8 (60.32)	2-3/8 (60.32)	4-3/8 (111.12)	3-1/4 (82.55)	1/2 (12.7)	4.5 (2.04)
STTH2012	2	1-1/4	5-5/8 (142.88)	2-5/8 (66.68)	2-5/8 (66.68)	4-1/2 (114.3)	3-3/8 (85.72)	1/2 (12.7)	6.8 (3.08)

Continued on next page.

COUPLERS BOLTED BRONZE TUBE TO TUBE (CONTINUED)

Product Data & Conductor Size

CATALOG NUMBER	COPPER CONDUCTOR SIZE TUBING IPS		DIMENSIONS INCHES (MM)						APPROX. WT. EACH LBS. (KG)
	MAIN	TAP	L	A	B	W	C	J	
STTH2014	2	1-1/2	5-5/8 (142.88)	2-5/8 (66.68)	2-5/8 (66.68)	4-3/8 (111.12)	3-7/8 (98.42)	1/2 (12.7)	8.2 (3.72)
STTH2020	2	2	5-5/8 (142.88)	2-5/8 (66.68)	2-5/8 (66.68)	4-1/2 (114.3)	4-1/2 (114.3)	1/2 (12.7)	8.5 (3.86)
STTH2406	2-1/2	3/4	6-1/8 (155.58)	3-1/4 (82.55)	2-1/2 (63.5)	4-3/4 (120.65)	3 (76.2)	1/2 (12.7)	4.7 (2.13)
STTH2410	2-1/2	1	6-1/4 (158.75)	3-1/4 (82.55)	2-1/2 (63.5)	4-3/4 (120.65)	3-1/4 (82.55)	1/2 (12.7)	4.8 (2.18)
STTH2412	2-1/2	1-1/4	6 (152.4)	3-1/4 (82.55)	2-3/4 (69.85)	4-3/4 (120.65)	3-5/8 (92.08)	1/2 (12.7)	7.8 (3.54)
STTH2414	2-1/2	1-1/2	5-5/8 (142.88)	2-5/8 (66.68)	2-5/8 (66.68)	4-3/4 (120.65)	3-3/4 (95.25)	1/2 (12.7)	8.3 (3.76)
STTH2420	2-1/2	2	5-5/8 (142.88)	2-5/8 (66.68)	2-5/8 (66.68)	4-3/4 (120.65)	4-1/2 (114.3)	1/2 (12.7)	8.7 (3.95)
STTH2424	2-1/2	2-1/2	5-5/8 (142.88)	2-5/8 (66.68)	2-5/8 (66.68)	4-7/8 (123.82)	4-7/8 (123.82)	1/2 (12.7)	9.1 (4.13)
STTH3020	3	2	5-5/8 (142.88)	2-5/8 (66.68)	2-5/8 (66.68)	5-1/4 (133.35)	4-1/2 (114.3)	1/2 (12.7)	9.5 (4.31)
STTH3024	3	2-1/2	5-5/8 (142.88)	2-5/8 (66.68)	2-5/8 (66.68)	5-1/2 (139.7)	4-7/8 (123.82)	1/2 (12.7)	10.0 (4.54)
STTH3030	3	3	7-1/2 (190.5)	3-1/2 (88.9)	3-1/2 (88.9)	5-7/8 (149.22)	5-7/8 (149.22)	5/8 (15.88)	17.0 (7.71)
STTH3434	3-1/2	3-1/2	7-1/4 (184.15)	3-1/2 (88.9)	3-1/2 (88.9)	6-3/8 (161.92)	6-3/8 (161.92)	5/8 (15.88)	20.5 (9.30)
STTH4020	4	2	5-5/8 (142.88)	2-1/2 (63.5)	2-1/2 (63.5)	6-5/8 (168.28)	4-1/2 (114.3)	1/2 (12.7)	11.8 (5.35)
STTH4030	4	3	7-5/8 (193.68)	4 (101.6)	3-1/2 (88.9)	7 (177.8)	5-7/8 (149.22)	5/8 (15.88)	19.0 (8.62)
STTH4040	4	4	6-3/4 (171.45)	3-1/4 (82.55)	3-1/4 (82.55)	7 (177.8)	7 (177.8)	5/8 (15.88)	25.0 (11.34)

BRONZE

STC8

COUPLERS BOLTED BRONZE TUBE TO CABLE

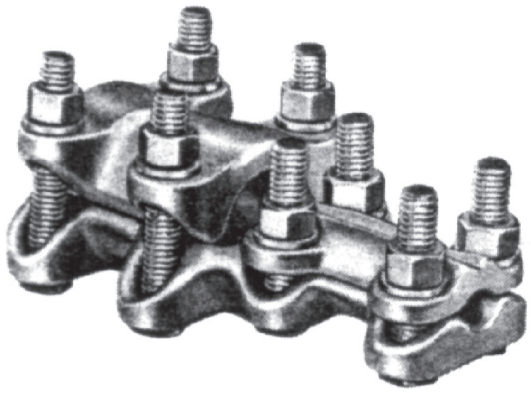

Bronze alloy coupler for connecting copper tubing to copper cable. Clamping bolts have hex-stops for onewrench installation. All sizes furnished with reversible cable caps.

Material: **Castings**—bronze alloy
Hardware—silicon bronze or stainless steel

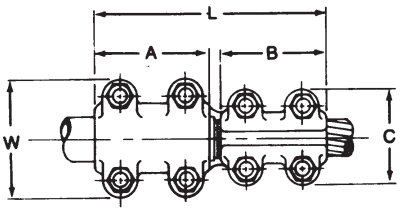

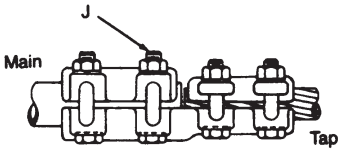

Product Data & Conductor Size

CATALOG NUMBER	COPPER CONDUCTOR RANGE			DIMENSIONS INCHES (MM)						APPROX. WT. EACH LBS. (KG)
	TUBING MAIN IPS	CABLE TAP	CABLE DIA.	L	A	B	W	C	J	
STC8040253	1/2	#4 Sol.-250 MCM	.204-.575 (5.18-14.60)	5-3/8 (136.52)	2-1/2 (63.5)	2-1/2 (63.5)	2-1/4 (57.15)	1-7/8 (47.62)	3/8 (9.52)	2.1 (.95)
STC806025	3/4	#4 Sol.-250 MCM	.204-.575 (5.18-14.60)	5-1/8 (130.18)	2-1/2 (63.5)	2-1/2 (63.5)	3 (76.2)	3 (76.2)	1/2 (12.7)	3.1 (1.41)
STC8060253	3/4	#4 Sol.-250 MCM	.204-.575 (5.18-14.60)	5-1/2 (139.7)	2-1/2 (63.5)	2-3/4 (69.85)	2-1/2 (63.5)	1-7/8 (47.62)	3/8 (9.52)	2.7 (1.22)
STC806050	3/4	1/0 Sol.—500 MCM	.325-.813 (8.26-20.65)	5-5/8 (142.88)	2-1/2 (63.5)	2-3/4 (69.85)	3 (76.2)	2-1/2 (63.5)	1/2 (12.7)	3.5 (1.59)
STC810025	1	#4 Sol.-250 MCM	.204-.575 (5.18-14.60)	5-3/8 (136.52)	2-1/2 (63.5)	2-1/2 (63.5)	3-1/4 (82.55)	2-1/4 (57.15)	1/2 (12.7)	2.9 (1.32)
STC8100253	1	#4 Sol.-250 MCM	.204-.575 (5.18-14.60)	5-3/8 (136.52)	2-1/2 (63.5)	2-1/2 (63.5)	2-7/8 (73.02)	1-7/8 (47.62)	3/8 (9.52)	2.5 (1.13)
STC810050	1	1/0 Sol.—500 MCM	.325-.813 (8.26-20.65)	5-3/4 (146.05)	2-1/2 (63.5)	2-3/4 (69.85)	3-1/4 (82.55)	2-1/2 (63.5)	1/2 (12.7)	3.7 (1.68)
STC810080	1	2/0 Sol.—800 MCM	.365-1.031 (9.27-26.19)	6-3/4 (171.45)	3-3/4 (95.25)	2-3/4 (69.85)	3-1/4 (82.55)	2-7/8 (73.02)	1/2 (12.7)	3.7 (1.68)
STC810100	1	4/0 Str.—1000 MCM	.522-1.152 (13.26-29.26)	7-3/8 (187.32)	3-3/4 (95.25)	3-1/2 (88.9)	3-1/4 (82.55)	2-7/8 (73.02)	1/2 (12.7)	4.1 (1.86)
STC812025	1-1/4	#4 Sol.-250 MCM	.204-.575 (5.18-14.60)	5 (127.0)	2-1/4 (57.15)	2-1/2 (63.5)	3-3/8 (85.72)	3 (76.2)	1/2 (12.7)	3.4 (1.54)
STC8120253	1-1/4	#4 Sol.-250 MCM	.204-.575 (5.18-14.60)	5-1/4 (133.35)	2-1/4 (57.15)	2-3/4 (69.85)	3-1/8 (79.38)	1-7/8 (47.62)	1/2 (12.7)	2.8 (1.27)
STC812050	1-1/4	1/0 Sol.—500 MCM	.325-.813 (8.26-20.65)	5-7/8 (149.22)	2-3/4 (69.85)	2-3/4 (69.85)	3-5/8 (92.08)	2-1/2 (63.5)	1/2 (12.7)	3.8 (1.72)
STC812080	1-1/4	2/0 Sol.—800 MCM	.365-1.031 (9.27-26.19)	5-3/4 (146.05)	2-3/4 (69.85)	2-3/4 (69.85)	3-5/8 (92.08)	2-7/8 (73.02)	1/2 (12.7)	4.6 (2.09)
STC812100	1-1/4	4/0 Str.—1000 MCM	.522-1.152 (13.26-29.26)	7-1/2 (190.5)	3-3/4 (95.25)	3-1/2 (88.9)	3-5/8 (92.08)	2-7/8 (73.02)	1/2 (12.7)	5.0 (2.28)
STC814025	1-1/2	#4 Sol.-250 MCM	.204-.575 (5.18-14.60)	5-5/8 (142.88)	2-3/4 (69.85)	2-1/2 (63.5)	3-3/4 (95.25)	2-3/8 (60.32)	1/2 (12.7)	5.5 (2.49)
STC814050	1-1/2	1/0 Sol.—500 MCM	.325-.813 (8.26-20.65)	5-3/4 (146.05)	2-3/4 (69.85)	2-3/4 (69.85)	3-3/4 (95.25)	2-1/2 (63.5)	1/2 (12.7)	5.2 (2.36)

Continued on next page.

COUPLERS BOLTED BRONZE TUBE TO CABLE (CONTINUED)

Product Data & Conductor Size

CATALOG NUMBER	COPPER CONDUCTOR RANGE			DIMENSIONS INCHES (MM)						APPROX. WT. EACH LBS. (KG)
	TUBING MAIN IPS	CABLE TAP	CABLE DIA.	L	A	B	W	C	J	
STC814080	1-1/2	2/0 Sol.—800 MCM	.365-1.031 (9.27-26.19)	5-3/4 (146.05)	2-3/4 (69.85)	2-3/4 (69.85)	3-7/8 (98.42)	2-7/8 (73.02)	1/2 (12.7)	5.7 (2.58)
STC814100	1-1/2	4/0 Str.—1000 MCM	.522-1.152 (184.15)	7-1/4 (184.15)	3-1/4 (82.55)	3-1/2 (88.9)	3-3/4 (95.25)	2-7/8 (73.02)	1/2 (12.7)	7.4 (3.36)
STC814150	1-1/2	250—1500 MCM	.574-1.412 (14.58-35.86)	7-1/2 (190.5)	3-1/2 (88.9)	3-3/4 (95.25)	3-1/4 (82.55)	3-1/8 (79.38)	1/2 (12.7)	7.4 (3.36)
STC820025	2	#4 Sol.-250 MCM	.204-.575 (5.18-14.60)	5-1/8 (130.18)	2-1/4 (57.15)	2-1/2 (63.5)	4-1/2 (114.3)	2-1/4 (57.15)	1/2 (12.7)	5.4 (2.45)
STC820050	2	1/0 Sol.—500 MCM	.325-.813 (8.26-20.65)	5-3/8 (136.52)	2-1/4 (57.15)	2-3/4 (69.85)	4-1/2 (114.3)	2-1/2 (63.5)	1/2 (12.7)	5.7 (2.58)
STC820080	2	2/0 Sol.-800 MCM	.365-1.031 (9.27-26.19)	5-1/4 (133.35)	2-1/4 (57.15)	2-3/4 (69.85)	4-1/2 (114.3)	2-7/8 (73.02)	1/2 (12.7)	6.5 (2.95)
STC820100	2	4/0 Str.-1000 MCM	.522-1.152 (13.26-29.26)	7-1/8 (180.98)	3-1/4 (82.55)	3-1/2 (88.9)	4-1/2 (114.3)	2-7/8 (73.02)	1/2 (12.7)	7.3 (3.31)
STC820150	2	250—1500 MCM	.574-1.412 (14.58-35.86)	7-1/8 (180.98)	3-1/4 (82.55)	3-3/4 (95.25)	4-1/2 (114.3)	3-3/8 (85.72)	1/2 (12.7)	8.5 (3.85)
STC824025	2-1/2	#4 Sol.-250 MCM	.204-.575 (5.18-14.60)	5-1/2 (139.7)	2-1/2 (63.5)	2-1/2 (63.5)	4-7/8 (123.82)	2-3/8 (60.32)	1/2 (12.7)	6.7 (3.04)
STC824050	2-1/2	1/0 Sol.—500 MCM	.325-.813 (8.26-20.65)	6-1/2 (165.1)	3-1/4 (82.55)	2-3/4 (69.85)	4-3/4 (120.65)	2-1/2 (63.5)	1/2 (12.7)	8.0 (3.63)
STC824080	2-1/2	2/0 Sol.-800 MCM	.365-1.031 (9.27-26.19)	6 (152.4)	2-3/4 (69.85)	2-3/4 (69.85)	4-3/4 (120.65)	2-7/8 (73.02)	1/2 (12.7)	8.1 (3.67)
STC824100	2-1/2	4/0 Str.-1000 MCM	.522-1.152 (13.26-29.26)	7 (177.8)	3-1/4 (82.55)	3-1/2 (88.9)	4-3/4 (120.65)	2-7/8 (73.02)	1/2 (12.7)	8.9 (4.04)
STC824150	2-1/2	250—1500 MCM	.574-1.412 (14.58-35.86)	7-1/2 (190.5)	3-1/4 (82.55)	3-3/4 (95.25)	4-3/4 (120.65)	3-3/8 (85.72)	1/2 (12.7)	9.1 (4.13)
STC824200	2-1/2	500 -2000 MCM	.811-1.632 (20.60-41.45)	7-1/2 (190.5)	3-1/4 (82.55)	4 (101.6)	4-3/4 (120.65)	3-3/8 (85.72)	1/2 (12.7)	10.7 (4.85)
STC830050	3	1/0 Sol.—500 MCM	.325-.813 (8.26-20.65)	5-5/8 (142.88)	2-1/2 (63.5)	2-3/4 (69.85)	5-1/4 (133.35)	2-1/2 (63.5)	1/2 (12.7)	7.8 (3.54)
STC830100	3	4/0 Str.—1000 MCM	.522-1.152 (13.26-29.26)	6-3/8 (161.92)	2-1/2 (63.5)	3-1/2 (88.9)	5-1/4 (133.35)	2-7/8 (73.02)	1/2 (12.7)	9.1 (4.13)
STC830150	3	250—1500 MCM	.574-1.412 (14.58-35.86)	7-7/8 (200.02)	3-1/2 (88.9)	3-3/4 (95.25)	5-1/2 (139.7)	3-3/8 (85.72)	1/2 (12.7)	10.3 (4.67)
STC830200	3	500—2000 MCM	.811-1.632 (20.60-41.45)	6-7/8 (174.62)	2-1/2 (63.5)	4 (101.6)	5-1/4 (133.35)	3-3/8 (85.72)	1/2 (12.7)	12.2 (5.53)
STC840150	4	250—1500 MCM	.574-1.412 (14.58-35.86)	8 (203.2)	4 (101.6)	3-3/4 (95.25)	6-5/8 (168.28)	3-3/8 (85.72)	1/2 (12.7)	12.3 (5.58)

ALUMINUM WELDMENT CONNECTORS

SB 12

INTRODUCTION

Welded joints of aluminum conductors offer advantages over bolted and compression fittings in performance and economy for certain applications. This is especially true when the proper welding method (MIG or TIG) and the proper weldment connectors are selected.

The best electrical joints are obtained when quality connectors of proven performance, that are backed by a reputable connector manufacturer, are installed with the proper welding methods.

Electric arc welding, with an inert gas shield, provides electrically and mechanically sound joints that require no special surface preparation other than cleaning of the joint to be welded. There is no contact resistance in a properly welded joint. The resulting connection is highly efficient and adds very little bulk to the conductors.

From an economic standpoint, welded joints are more feasible in larger substations that can justify the services of experienced welders and the use of the proper welding apparatus. Practically all types of joints for joining aluminum angle bar, sheet and tubular bus are possible through the use of proper welding accessories. It is also practical to weld tubular bus to cable and cable terminal joints through proper welding techniques and cable connectors. Of course, proper provision must be made to free the cable of high stresses in the vicinity of the weld because of the annealed conductor strands.

Many techniques have been developed for the welded assembly of aluminum conductors in substations, but certain ones have been found to offer more advantages than others. Accessories in the form of cast aluminum weldment connectors have been developed to facilitate the joining and supporting of aluminum conductors. These connectors, as developed by Anderson, have been designed to provide:

1. Rigid support and proper alignment.
2. Fast assembly without need for tedious forming and fitting of bus.
3. Continuous welds of regular contours that provide a weld area equivalent to 1-10% of the cross sectional area of the connector.
4. Neat appearance without bulky additions beyond the size and shape of the conductors.
5. Smooth contours suitable for high voltage applications where corona and R.I.V. level are of concern.
6. Flexible couplers to compensate for expansion and contraction of bus.
7. Many other features available for specific applications.

Anderson supplies cast weldment fittings of 356 aluminum alloy which are heat treated to T6 condition for applications requiring high strength and good electrical conductivity. It is wise to choose the filler alloy on the basis of the parent metal alloys to be joined. A poor choice can cause various difficulties, i.e.,

1. Low strength.
2. Weld cracking.
3. Poor corrosion resistance.
4. Poor color matching.
5. Difficulty in welding.

The filler rod material recommended by Anderson for joining 356-T6 cast aluminum fittings to EC grade aluminum conductor materials is 4043 alloy. This filler material has a typical conductivity of 40 per cent (IACS). Although it would appear that a purer material should be used for welding aluminum castings and the EC grades of conductor materials, the resulting joint usually has a lower resistance than an equivalent length of conductor. Also, a further point for consideration is that 4043 alloy is considerably easier to weld than the higher purity filler materials.

For more information on Welding Methods and Apparatus, see reference section ST.

COUPLERS
WELDMENT ALUMINUM
TUBE TO TUBE

ALUMINUM
WC

Aluminum alloy weldment coupler for connecting aluminum tubing. The joint can be stiffened, if desired, by drilling two holes in each tube at 180 degree points and plug welding the tubing to the coupler.

Material: **Castings**—356-T6 aluminum alloy

Note: To specify coupler for extra heavy (Schedule 80 EHIPS) tubing add "H" to catalog number..
Example: WCH3030.

For larger tubing sizes, see catalog style WCI.

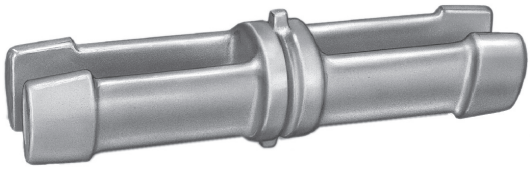

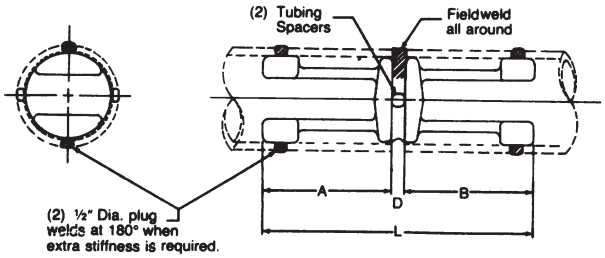

Product Data & Conductor Size

CATALOG NUMBER	ALUMINUM CONDUCTOR SIZE		DIMENSIONS INCHES (MM)				APPROX. WT. EACH LBS. (KG)
	TUBING MAIN IPS	TUBING TAP IPS	L	A	B	D	
WC1010	1	1	4-1/8 (104.78)	2 (50.8)	2 (50.8)	1/8 (3.18)	.35 (.16)
WC1212	1-1/4	1-1/4	5-1/8 (130.18)	2-1/2 (63.5)	2-1/2 (63.5)	1/8 (3.18)	.44 (.20)
WC1412	1-1/2	1-1/4	5-5/8 (142.88)	3 (76.2)	2-1/2 (63.5)	1/8 (3.18)	.61 (.28)
WC1414	1-1/2	1-1/2	6-1/8 (155.58)	3 (76.2)	3 (76.2)	1/8 (3.18)	.73 (.33)
WC2020	2	2	8-1/4 (209.55)	4 (101.6)	4 (101.6)	1/4 (6.35)	1.1 (.50)
WC2424	2-1/2	2-1/2	10-1/4 (260.35)	5 (127.0)	5 (127.0)	1/4 (6.35)	1.7 (.77)
WC3020	3	2	10-3/4 (273.05)	6 (152.4)	4 (101.6)	3/4 (19.05)	2.2 (1.0)
WC3024	3	2-1/2	11-3/4 (298.45)	6 (152.4)	5 (127.0)	3/4 (19.05)	2.5 (1.13)
WC3030	3	3	12-1/4 (311.15)	6 (152.4)	6 (152.4)	1/4 (6.35)	2.6 (1.18)

ALUMINUM

WCI

COUPLERS WELDMENT ALUMINUM TUBE TO TUBE

Aluminum alloy weldment coupler for connecting aluminum tubing. Slot provides for close fit regardless of tubing tolerance. The joint can be stiffened, if desire, by drilling four holes in the tubing at 90 degree lateral points and plug welding the tubing to the coupler.

Material: **Castings**—356-T6 aluminum alloy
Extrusions—6061-T6 Alloy

Note: To specify coupler for extra heavy (Schedule 80 EHIPS) tubing add "H" to catalog number.
Example: WCIH3030.

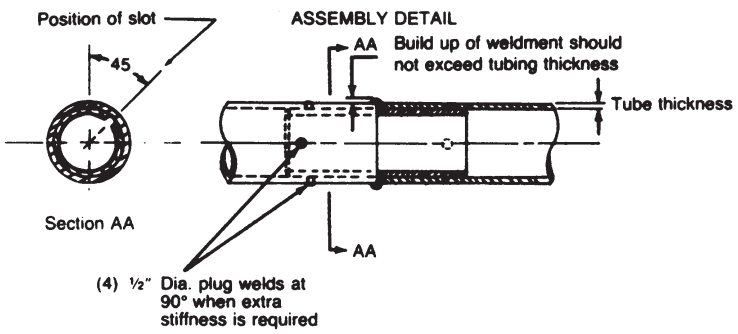

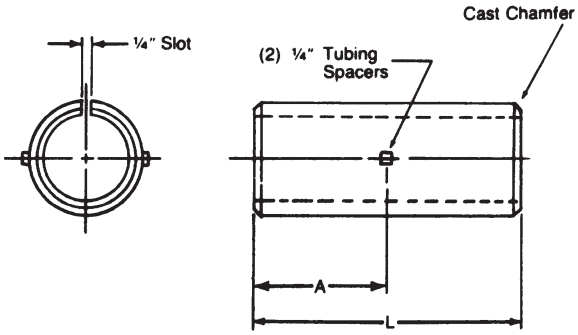

Product Data & Conductor Size

CATALOG NUMBER	ALUMINUM CONDUCTOR SIZE		DIMENSIONS INCHES (MM)		APPROX. WT. EACH LBS. (KG)
	TUBING MAIN IPS	TUBING TAP IPS	L	A	
WCI2020	2	2	12 (304.8)	6 (152.4)	1.5 (.68)
WCI2424	2-1/2	2-1/2	15 (381.0)	7-1/2 (190.5)	2.3 (1.04)
WCI3030†	3	3	18 (457.2)	9 (228.6)	3.5 (1.59)
WCI3434	3-1/2	3-1/2	18 (457.2)	10-1/2 (266.7)	4.6 (2.09)
WCI4040	4	4	24 (609.6)	12 (304.8)	7.1 (3.22)
WCI5050	5	5	24 (609.6)	12 (304.8)	9.7 (4.40)
WCI6060	6	6	24 (609.6)	12 (304.8)	12.7 (5.76)

† Catalog no. is extrusion, others are castings.

COUPLERS
WELDMENT ALUMINUM
TUBE TO TUBE

ALUMINUM
WLI90

Aluminum alloy weldment coupler for connecting aluminum tubing at 90 degrees.

Material: **Castings**—356-T6 aluminum alloy

Note: To specify coupler for extra heavy (Schedule 80 EHIPS) tubing add "H" to catalog number.
Example: WLIH903030.

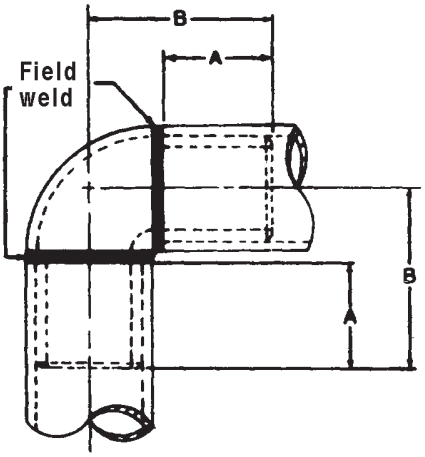

SB 15

Product Data & Conductor Size

CATALOG NUMBER	ALUMINUM CONDUCTOR SIZE		DIMENSIONS INCHES (MM)		APPROX. WT. EACH LBS. (KG)
	TUBING MAIN IPS	TUBING TAP IPS	A	B	
WLI901010	1	1	1 (25.4)	1-13/16 (46.04)	.34 (.15)
WLI901212	1-1/4	1-1/4	1 (25.4)	2-1/4 (57.15)	.49 (.22)
WLI901414	1-1/2	1-1/2	1 (25.4)	2-3/8 (60.32)	.95 (.43)
WLI902020	2	2	2 (50.8)	3-3/8 (85.72)	1.4 (.64)
WLI902424	2-1/2	2-1/2	1-1/2 (38.1)	4-3/16 (106.36)	1.8 (.82)
WLI903030	3	3	1-3/4 (44.45)	4-3/4 (120.65)	2.9 (1.32)
WLI903434	3-1/2	3-1/2	1-3/4 (44.45)	5-1/4 (133.35)	3.9 (1.77)
WLI904040	4	4	2 (50.8)	6 (152.4)	5.1 (2.31)
WLI905050	5	5	2 (50.8)	6-9/16 (166.69)	7.8 (3.54)
WLI906060	6	6	2-1/2 (63.5)	7-11/16 (195.26)	11.6 (5.26)

ALUMINUM

WLI45

COUPLERS WELDMENT ALUMINUM TUBE TO TUBE

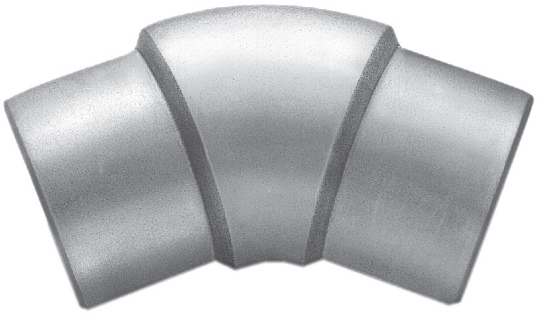

Aluminum alloy weldment coupler for connecting aluminum tubing at 45 degrees.

Material: **Castings**—356-T6 aluminum alloy

Note: To specify coupler for extra heavy (Schedule 80 EHIPS) tubing add "H" to catalog number.
Example: WLIH453030.

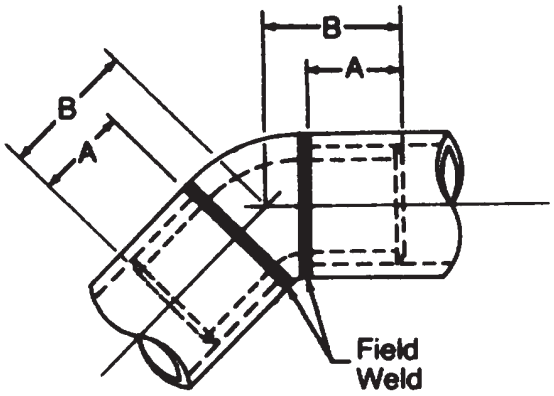

Product Data & Conductor Size

CATALOG NUMBER	ALUMINUM CONDUCTOR SIZE		DIMENSIONS INCHES (MM)		APPROX. WT. EACH LBS. (KG)
	TUBING MAIN IPS	TUBING TAP IPS	A	B	
WLI451010	1	1	1 (25.4)	1-5/8 (41.28)	.31 (.14)
WLI451414	1-1/2	1-1/2	1 (25.4)	2-1/4 (57.15)	.70 (.32)
WLI452020	2	2	2 (50.8)	3-1/4 (82.55)	1.5 (.68)
WLI452424	2-1/2	2-1/2	2 (50.8)	3-5/16 (84.14)	1.4 (.64)
WLI453030	3	3	1-3/4 (44.45)	3-3/8 (85.72)	2.2 (1.00)
WLI453434	3-1/2	3-1/2	1-3/4 (44.45)	3-1/2 (88.9)	2.9 (1.32)
WLI454040	4	4	2 (50.8)	3-3/4 (95.25)	3.5 (1.59)
WLI455050	5	5	2 (50.8)	4-1/8 (104.78)	5.1 (2.31)
WLI456060	6	6	2-1/2 (63.5)	4-7/8 (123.82)	8.0 (3.63)

SUBSTATION CONNECTORS

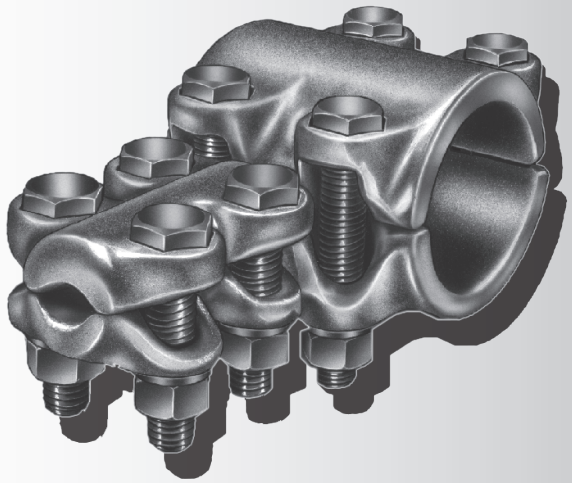

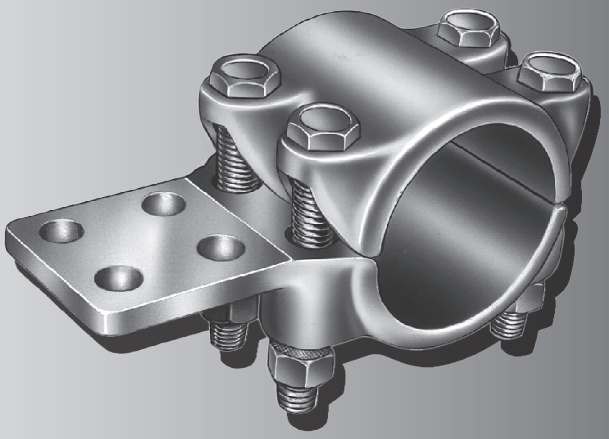

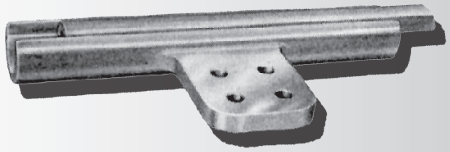

SECTION SC

TEES

Aluminum Bolted
Aluminum Compression
Aluminum Weldment
Bronze Bolted
Copper Compression

TEES

BOLTED/ALUMINUM

ATCC ..... CABLE MAIN TO CABLE TAP SC-1
ATCF ..... CABLE MAIN TO FLAT BAR TAP SC-3
ATT15 ..... ANGLE, TUBING MAIN TO TUBING TAP SC-9
ATT215 ..... ANGLE, TUBING MAIN TO TWO TUBING TAP SC-10
ATT2C ..... TUBING MAIN TO TWO CABLE TAP SC-6
ATTC ..... TUBING MAIN TO CABLE TAP SC-4
ATTF ..... TUBING MAIN TO FLAT BAR TAP SC-11
ATTS & ATTH ..... TUBING MAIN TO TUBING TAP SC-7

BOLTED/BRONZE

SF ..... CABLE OR TUBING MAIN TO FLAT BAR TAP SC-16
T2CC ..... TWO CABLE MAIN TO CABLE TAP SC-14
T2HC2HC ..... TWO CABLE MAIN TO TWO CABLE TAP SC-15
TCC ..... CABLE MAIN TO CABLE TAP SC-12
TT15 ..... ANGLE, TUBING MAIN TO TUBING TAP SC-23
TT215 ..... ANGLE, TUBING MAIN TO TWO TUBING TAP SC-25
TT2C ..... TUBING MAIN TO TWO CABLE TAP SC-19
TTC ..... TUBING MAIN TO CABLE TAP SC-17
TTF ..... TUBING MAIN TO FLAT BAR TAP SC-26
TTH ..... TUBING MAIN TO TUBING TAP SC-21

WELDMENT/ALUMINUM

WTT ..... TUBE TO TUBE SC-27
WTT15 ..... ANGLE, TUBE TO TUBE SC-29
WTT215 ..... ANGLE, TUBE TO TWO TUBES SC-31
WTTFR ..... TUBE TO FLAT SC-33

COMPRESSION/ALUMINUM

ORT21 ..... CABLE TO FLAT SC-34
ORT22 ..... CABLE TO CABLE SC-35

COMPRESSION/COPPER

BCTCC ..... CABLE TO CABLE SC-37
BCTCF ..... CABLE TO FLAT SC-38

TEES BOLTED ALUMINUM CABLE MAIN TO CABLE TAP

ALUMINUM
ATCC

Aluminum alloy, cable to cable, tee for connecting aluminum-aluminum or aluminum-copper conductor combinations. Clamping bolts have hex-stops for one-wrench installation. Contact sealant is recommended.

Material: **Castings**—356-T6 aluminum alloy
Hardware—aluminum alloy

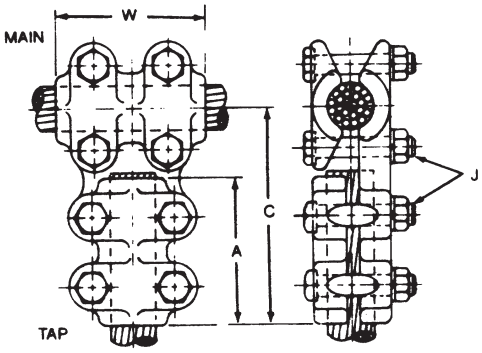

SC 1

Product Data & Conductor Size

CATALOG NUMBER	CONDUCTOR RANGE				DIMENSIONS INCHES (MM)				APPROX. WT. EACH LBS. (KG)
	CABLE MAIN		CABLE TAP						
	AAC	ACSR	AAC	ACSR	C	A	W	J	
***ATCC66	#4 Sol.-250 MCM	#4-4/0 Str.	#4 Sol.- 250 MCM	#4-4/0 Str.	4-3/8 (111.12)	3 (76.2)	3 (76.2)	1/2 (12.7)	.9 (.41)
*ATCC76	250-400 MCM	4/0-336.4 MCM	#4 Sol.-250 MCM	#4-4/0 Str.	4-3/8 (111.12)	3 (76.2)	3 (76.2)	1/2 (12.7)	1.0 (.45)
ATCC77			250-400 MCM	4/0-336.4 MCM	4-3/8 (111.12)	3 (76.2)	3 (76.2)	1/2 (12.7)	1.0 (.45)
*ATCC96	350-600 MCM	336.4-477 MCM	#4 Sol.-250 MCM	#4-4/0 Str.	4-1/2 (114.3)	3 (76.2)	3-1/4 (82.55)	1/2 (12.7)	1.1 (.50)
ATCC97			250-400 MCM	4/0-336.4 MCM	4-1/2 (114.3)	3 (76.2)	3-1/4 (82.55)	1/2 (12.7)	1.1 (.50)
ATCC99			350-600 MCM	336.4-477 MCM	4-3/4 (120.65)	3-1/4 (82.55)	3-1/4 (82.55)	1/2 (12.7)	1.1 (.50)
*ATCC116	600-900 MCM	556.5-795 MCM	#4 Sol.-250 MCM	#4-4/0 Str.	4-5/8 (117.48)	3 (76.2)	3-1/2 (88.9)	1/2 (12.7)	1.2 (.54)
ATCC117			250-400 MCM	4/0-336.4 MCM	4-5/8 (117.48)	3 (76.2)	3-1/2 (88.9)	1/2 (12.7)	1.3 (.59)
ATCC119			350-600 MCM	336.4-477 MCM	4-7/8 (123.82)	3-1/4 (82.55)	3-1/2 (88.9)	1/2 (12.7)	1.3 (.59)
ATCC1111			600-900 MCM	556.5-795 MCM	5-1/8 (130.18)	3-1/2 (88.9)	3-1/2 (88.9)	1/2 (12.7)	1.4 (.64)
*ATCC136	900-1250 MCM	715.5-1113 MCM	#4 Sol.-250 MCM	#4-4/0 Str.	4-3/4 (120.65)	3 (76.2)	3-3/4 (95.25)	1/2 (12.7)	1.7 (.77)
ATCC137			250-400 MCM	4/0-336.4 MCM	4-3/4 (120.65)	3 (76.2)	3-3/4 (95.25)	1/2 (12.7)	1.8 (.82)
ATCC139			350-600 MCM	336.4-477 MCM	5 (127.0)	3-1/4 (82.55)	3-3/4 (95.25)	1/2 (12.7)	2.0 (.91)
ATCC1311			600-900 MCM	556.5-795 MCM	5-1/4 (133.35)	3-1/2 (88.9)	3-3/4 (95.25)	1/2 (12.7)	2.1 (.95)
ATCC1313			900-1250 MCM	715.5-1113 MCM	5-1/2 (139.7)	3-3/4 (95.25)	3-3/4 (95.25)	1/2 (12.7)	2.2 (1.0)

** Tap connections are furnished with reversible cable caps.*
**** Main and tap connections are furnished with reversible cable caps.*
Continued on next page.

TEES BOLTED ALUMINUM CABLE MAIN TO CABLE TAP (CONTINUED)

Product Data & Conductor Size

CATALOG NUMBER	CONDUCTOR RANGE				DIMENSIONS INCHES (MM)				APPROX. WT. EACH LBS. (KG)
	CABLE MAIN		CABLE TAP						
	AAC	ACSR	AAC	ACSR	C	A	W	J	
*ATCC156	1250-1600 MCM	1113-1272 MCM	#4 Sol.-250 MCM	#4-4/0 Str.	4-7/8 (123.82)	3 (76.2)	4-1/4 (107.95)	1/2 (12.7)	2.1 (.95)
ATCC157			250-400 MCM	4/0-336.4 MCM	4-7/8 (123.82)	3 (76.2)	4-1/4 (107.95)	1/2 (12.7)	2.2 (1.0)
ATCC159			350-600 MCM	336.4-477 MCM	5-1/8 (130.18)	3-1/4 (82.55)	4-1/4 (107.95)	1/2 (12.7)	2.3 (1.04)
ATCC1511			600-900 MCM	556.5-795 MCM	5-3/8 (136.52)	3-1/2 (88.9)	4-1/4 (107.95)	1/2 (12.7)	2.4 (1.09)
ATCC1513			900-1250 MCM	715.5-1113 MCM	5-5/8 (142.88)	3-3/4 (95.25)	4-1/4 (107.95)	1/2 (12.7)	2.4 (1.09)
ATCC1515			1250-1600 MCM	1113-1272 MCM	6-1/4 (158.75)	4-1/4 (107.95)	4-1/4 (107.95)	5/8 (15.88)	2.5 (1.13)
*ATCC166	1500-2000 MCM	1272-1590 MCM	#4 Sol.-250 MCM	#4-4/0 Str.	4-3/4 (120.65)	3 (76.2)	4-1/2 (114.3)	1/2 (12.7)	2.4 (1.09)
ATCC167			250-400 MCM	4/0-336.4 MCM	5 (127.0)	3 (76.2)	4-1/2 (114.3)	1/2 (12.7)	2.6 (1.18)
ATCC169			350-600 MCM	336.4-477 MCM	5-1/4 (133.35)	3-1/4 (82.55)	4-1/2 (114.3)	1/2 (12.7)	2.9 (1.32)
ATCC1611			600-900 MCM	556.5-795 MCM	5-1/2 (139.7)	3-1/2 (88.9)	4-1/2 (114.3)	1/2 (12.7)	3.1 (1.41)
ATCC1613			900-1250 MCM	715.5-1113 MCM	5-3/4 (146.05)	3-3/4 (95.25)	4-1/2 (114.3)	1/2 (12.7)	3.5 (1.59)
ATCC1615			1250-1600 MCM	1113-1272 MCM	6-3/8 (161.92)	4-1/4 (107.95)	4-1/2 (114.3)	5/8 (15.88)	3.7 (1.68)
ATCC1616			1500-2000 MCM	1272-1590 MCM	6-5/8 (168.28)	4-1/2 (114.3)	4-1/2 (114.3)	5/8 (15.88)	4.0 (1.81)
ATCC186	2000-2500 MCM	1.632-1.824 in.	#4 Sol.-250 MCM	#4-4/0 Str.	4-7/8 (123.82)	3 (76.2)	4-3/4 (120.65)	1/2 (12.7)	2.7 (1.22)
ATCC187			250-400 MCM	4/0-336.4 MCM	5 (127)	3 (76.2)	4-3/4 (120.65)	1/2 (12.7)	2.9 (1.32)
ATCC189			350-600 MCM	336.4-477 MCM	5-1/4 (133.35)	3-1/4 (82.55)	4-3/4 (120.65)	1/2 (12.7)	3.2 (1.45)
ATCC1811			600-900 MCM	556.5-795 MCM	5-1/2 (139.7)	3-1/2 (88.9)	4-3/4 (120.65)	1/2 (12.7)	3.5 (1.59)
ATCC1815			1250-1600 MCM	1113-1272 MCM	6-5/8 (168.28)	4-1/4 (107.95)	4-3/4 (120.65)	5/8 (15.88)	3.9 (1.77)
ATCC1816			1500-2000 MCM	1272-1590 MCM	6-11/16 (169.86)	4-1/2 (114.3)	4-3/4 (120.65)	5/8 (15.88)	4.1 (1.86)
ATCC1818			2000-2500 MCM	1.632-1.824 in.	6-7/8 (174.62)	4-3/4 (120.65)	4-3/4 (120.65)	5/8 (15.88)	4.4 (2.0)

** Tap connections are furnished with reversible cable caps.*

TEES BOLTED ALUMINUM CABLE MAIN TO FLAT BAR TAP

ALUMINUM
ATCF

Aluminum alloy, cable to flat bar, tee for connecting aluminum-cable to aluminum or copper flat pad combinations.Flat pads are 3/8" thick with contact surface on one side. NEMA hole spacing is standard. Contact sealant is recommended.

Material: **Castings**—356-T6 aluminum alloy
Clamping hardware—aluminum alloy

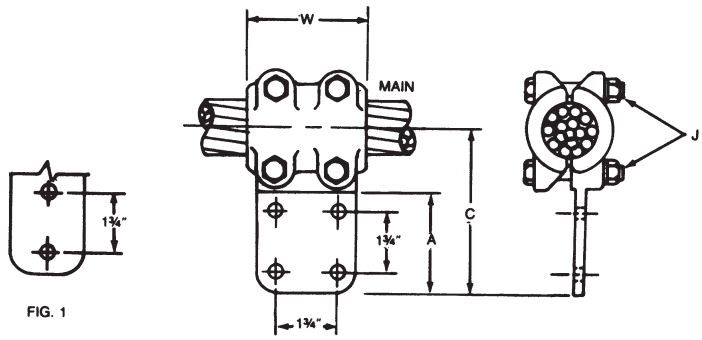

FIG. 1 FIG. 2

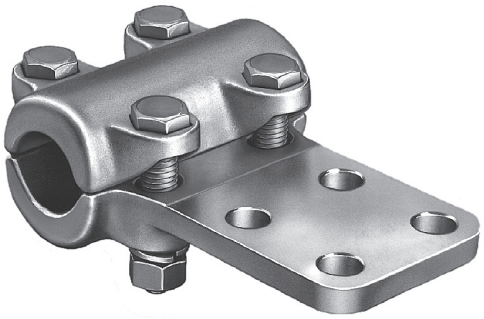

SC 3

Product Data & Conductor Size

CATALOG NUMBER	FIG. NO.	CONDUCTOR RANGE — CABLE MAIN — AAC	ACSR	DIA.	FLAT BAR TAP WIDTH INCHES	DIMENSIONS INCHES (MM) — C	A	W	J	APPROX. WT. EACH LBS. (KG)
**ATCF6301	2	#4 Sol.-250 MCM	#4-4/0 Str.	.232-.575 (5.89-14.6)	3	4-5/8 (117.48)	3-1/4 (82.55)	3 (76.2)	1/2 (12.7)	.9 (.41)
ATCF7201	1	250-400 MCM	4/0-336.4 MCM	.563-.744 (14.3-18.9)	2	4-3/4 (120.65)	3-1/4 (82.55)	3 (76.2)	1/2 (12.7)	.9 (.41)
ATCF9201	1	350-600 MCM	336.4-477 MCM	.681-.893 (17.3-22.68)	2	4-7/8 (123.82)	3-1/4 (82.55)	3-1/4 (82.55)	1/2 (12.7)	1.4 (.64)
ATCF9301	2				3	4-7/8 (123.82)	3-1/4 (82.55)	3-1/4 (82.55)	1/2 (12.7)	1.8 (.82)
ATCF9401	2				4	5-3/4 (146.05)	4-1/4 (107.95)	3-1/4 (82.55)	1/2 (12.7)	2.2 (1.0)
ATCF11301	2	600-900 MCM	556.5-795 MCM	.870-1.108 (22.1-28.14)	3	5 (127.0)	3-1/4 (82.55)	3-1/2 (88.9)	1/2 (12.7)	2.3 (1.1)
ATCF11401	2				4	6 (152.4)	4-1/4 (107.95)	3-1/2 (88.9)	1/2 (12.7)	2.7 (1.3)
ATCF13301	2	900-1250 MCM	715.5-1113 MCM	1.081-1.293 (27.46-32.84)	3	5-1/8 (130.18)	3-1/4 (82.55)	3-3/4 (95.25)	1/2 (12.7)	2.4 (1.1)
ATCF15301	2	1250-1600 MCM	1113-1272 MCM	1.289-1.459 (32.74-37.06)	3	5-1/4 (133.35)	3-1/4 (82.55)	4-1/4 (107.95)	1/2 (12.7)	2.6 (1.2)
ATCF15401	2				4	6-1/4 (158.75)	4-1/4 (107.95)	4-1/4 (107.95)	1/2 (12.7)	3.0 (1.4)
ATCF16301	2	1500-2000 MCM	1272-1590 MCM	1.382-1.632 (35.1-41.45)	3	5-3/4 (146.05)	3-1/4 (82.55)	4-1/2 (114.3)	5/8 (15.88)	3.7 (1.7)
ATCF16401	2				4	6-1/2 (165.1)	4-1/4 (107.95)	4-1/2 (114.3)	5/8 (15.88)	4.2 (1.9)
ATCF18401	2	2000-2500 MCM	—	1.632-1.824 (41.45-46.33)	4	6-1/2 (165.1)	4-1/4 (107.95)	4-3/4 (120.65)	5/8 (15.88)	4.1 (1.9)
ATCF21301	2	2500-3000 MCM	—	1.824-2.0 (46.33-50.8)	3	5-3/4 (146.05)	3-1/4 (82.55)	5 (127.0)	5/8 (15.88)	4.5 (2.1)

*** Main connections are furnished with reversible cable caps.*

TEES BOLTED ALUMINUM TUBING MAIN TO CABLE TAP

ALUMINUM
ATTC

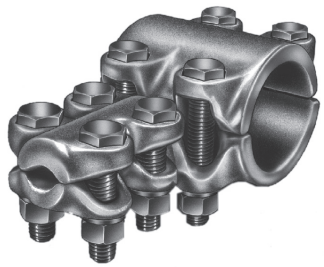

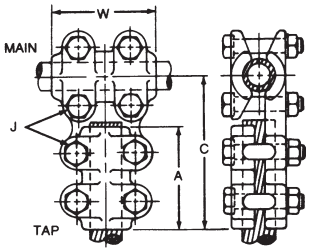

Aluminum alloy, tubing to cable, tee for connecting aluminum-aluminum or aluminum-copper conductor combinations. Clamping bolts have hex-stops for one-wrench installation. Contact sealant is recommended.

Material: **Castings**—356-T6 aluminum alloy
Hardware—aluminum alloy

Product Data & Conductor Size

CATALOG NUMBER	CONDUCTOR RANGE				DIMENSIONS INCHES (MM)				APPROX. WT. EACH LBS. (KG)
	TUBING MAIN IPS/EHIPS	CABLE TAP							
		AAC	ACSR	DIA.	C	A	W	J	
*ATTC066	3/4	#4-250 MCM	#4-4/0 Str.	.232-.575 (5.89-14.6)	4-5/8 (117.48)	3 (76.2)	2-1/2 (63.5)	1/2 (12.7)	1.3 (.59)
ATTC067	3/4	250-400 MCM	4/0-336.4 MCM	.563-.744 (14.3-18.9)	4-5/8 (117.48)	3 (76.2)	2-1/2 (63.5)	1/2 (12.7)	1.4 (.52)
ATTC069	3/4	350-600 MCM	336.4-477 MCM	.681-.893 (17.3-22.68)	4-5/8 (117.48)	3-1/4 (82.55)	2-1/2 (63.5)	1/2 (12.7)	1.4 (.52)
ATTC0611	3/4	600-900 MCM	556.5-715.5 MCM	.870-1.108 (22.1-28.14)	5-1/8 (130.18)	3-1/2 (88.9)	2-1/2 (63.5)	1/2 (12.7)	1.4 (.52)
*ATTC106	1	#4-250 MCM	#4-4/0 Str.	.232-.575 (5.89-14.6)	4-3/4 (120.65)	3 (76.2)	2-3/4 (69.85)	1/2 (12.7)	1.3 (.59)
ATTC107	1	250-400 MCM	4/0-336.4 MCM	.563-.744 (14.3-18.9)	4-3/4 (120.65)	3 (76.2)	2-3/4 (69.85)	1/2 (12.7)	1.4 (.52)
ATTC109	1	350-600 MCM	336.4-477 MCM	.681-.893 (17.3-22.68)	5 (127.0)	3-1/4 (82.55)	2-3/4 (69.85)	1/2 (12.7)	1.5 (.68)
ATTC1011	1	600-900 MCM	556.5-795.5 MCM	.870-1.108 (22.1-28.14)	5-1/4 (133.35)	3-1/2 (88.9)	2-3/4 (69.85)	1/2 (12.7)	1.7 (.77)
*ATTC126	1-1/4	#4-250 MCM	#4-4/0 Str.	.232-.575 (5.89-14.6)	5 (127.0)	3 (76.2)	3 (76.2)	1/2 (12.7)	1.4 (.52)
ATTC127	1-1/4	250-400 MCM	4/0-336.4 MCM	.563-.744 (14.3-18.9)	5 (127.0)	3 (76.2)	3 (76.2)	1/2 (12.7)	1.5 (.68)
ATTC129	1-1/4	350-600 MCM	336.4-477 MCM	.681-.893 (17.3-22.68)	5-1/4 (133.35)	3-1/4 (82.55)	3 (76.2)	1/2 (12.7)	1.6 (.72)
ATTC1211	1-1/4	600-900 MCM	556.5-795.5 MCM	.870-1.108 (22.1-28.14)	5-1/2 (139.7)	3-1/2 (88.9)	3 (76.2)	1/2 (12.7)	1.9 (.86)
*ATTC146	1-1/2	#4-250 MCM	#4-4/0 Str.	.232-.575 (5.89-14.6)	5 (127.0)	3 (76.2)	3-1/4 (82.55)	1/2 (12.7)	2.2 (1.0)
ATTC147	1-1/2	250-400 MCM	4/0-336.4 MCM	.563-.744 (14.3-18.9)	5 (127.0)	3 (76.2)	3-1/4 (82.55)	1/2 (12.7)	2.3 (1.04)
ATTC149	1-1/2	350-600 MCM	336.4-477 MCM	.681-.893 (17.3-22.68)	5-1/4 (133.35)	3-1/4 (82.55)	3-1/4 (82.55)	1/2 (12.7)	2.4 (1.09)
ATTC1411	1-1/2	600-900 MCM	556.5-795.5 MCM	.870-1.108 (22.1-28.14)	5-1/2 (139.7)	3-1/2 (88.9)	3-1/4 (82.55)	1/2 (12.7)	3.0 (1.36)
ATTC1413	1-1/2	900-1250 MCM	715.5-1113 MCM	1.081-1.293 (27.46-32.84)	5-3/4 (146.05)	3-3/4 (95.25)	3-1/4 (82.55)	1/2 (12.7)	3.2 (1.45)
ATTC1415	1-1/2	1250-1600 MCM	1113-1272 MCM	1.289-1.459 (32.74-37.06)	6-1/4 (158.75)	4-1/4 (107.95)	3-1/4 (82.55)	1/2 (12.7)	3.6 (1.6)
*ATTC206	2	#4-250 MCM	#4-4/0 Str.	.232-.575 (5.89-14.60)	5-1/2 (139.7)	3 (76.2)	3-1/2 (88.9)	1/2 (12.7)	2.0 (.9)
ATTC207	2	250-400 MCM	4/0-336.4 MCM	.563-.744 (14.3-18.9)	5-3/8 (136.52)	3 (76.2)	3-1/2 (88.9)	1/2 (12.7)	2.1 (.95)
ATTC209	2	350-600 MCM	336.4-477 MCM	.681-.893 (17.3-22.68)	5-5/8 (142.88)	3-1/4 (82.55)	3-1/2 (88.9)	1/2 (12.7)	2.2 (1.0)
ATTC2011	2	600-900 MCM	556.5-795 MCM	.870-1.108 (22.1-28.14)	5-7/8 (149.22)	3-1/2 (88.9)	3-1/2 (88.9)	1/2 (12.7)	3.3 (1.50)
ATTC2013	2	900-1250 MCM	715.5-1113 MCM	1.081-1.293 (27.46-32.84)	6-1/8 (155.58)	3-3/4 (95.25)	3-1/2 (88.9)	1/2 (12.7)	3.5 (1.59)

** Tap connections are furnished with reversible caps.* *(Continued on next page.)*

TEES BOLTED ALUMINUM TUBING MAIN TO CABLE TAP (CONTINUED)

Product Data & Conductor Size

CATALOG NUMBER	CONDUCTOR RANGE				DIMENSIONS INCHES (MM)				APPROX. WT. EACH LBS. (KG)
	TUBING MAIN IPS/EHIPS	CABLE TAP							
		AAC	ACSR	DIA.	C	A	W	J	
ATTC2015	2	1250-1600 MCM	1113-1272 MCM	1.289-1.459 (32.74-37.06)	6-3/4 (171.45)	4-1/4 (107.95)	3-1/2 (88.9)	1/2 (12.7)	3.1 (1.4)
ATTC2016	2	1500-2000 MCM	1272-1590 MCM	1.382-1.632 (35.10-41.45)	7 (177.8)	4-1/2 (114.3)	3-1/2 (88.9)	1/2 (12.7)	3.8 (1.7)
ATTC247	2-1/2	250-400 MCM	4/0-336.4 MCM	.563-.744 (14.3-18.9)	5-5/8 (142.88)	3 (76.2)	3-3/4 (95.25)	1/2 (12.7)	2.4 (1.09)
ATTC249	2-1/2	350-600 MCM	336.4-477 MCM	.681-.893 (17.3-22.68)	5-5/8 (142.88)	3-1/4 (82.55)	3-3/4 (95.25)	1/2 (12.7)	2.9 (1.32)
ATTC2411	2-1/2	600-900 MCM	556.5-795 MCM	.870-1.108 (22.1-28.14)	6 (152.4)	3-1/2 (88.9)	3-3/4 (95.25)	1/2 (12.7)	3.6 (1.63)
ATTC2413	2-1/2	900-1250 MCM	715.5-1113 MCM	1.081-1.293 (27.46-32.84)	6-3/8 (161.92)	3-3/4 (95.25)	3-3/4 (95.25)	1/2 (12.7)	3.8 (1.72)
ATTC2415	2-1/2	1250-1600 MCM	1113-1272 MCM	1.289-1.459 (32.74-37.06)	7 (177.8)	4-1/4 (107.95)	3-3/4 (95.25)	5/8 (15.88)	4.3 (1.95)
ATTC2416	2-1/2	1500-2000 MCM	1272-1590 MCM	1.382-1.632 (35.1-41.45)	7-1/4 (184.15)	4-1/2 (114.3)	3-3/4 (95.25)	5/8 (15.88)	5.4 (2.4)
ATTC2418	2-1/2	2000-2500 MCM	—	1.632-1.824 (41.45-46.33)	7-1/2 (190.5)	4-3/4 (120.65)	3-3/4 (95.25)	5/8 (15.88)	5.8 (2.6)
*ATTC306	3	#4-250 MCM	#4-4/0 Str.	.232-.575 (5.89-14.60)	5-7/8 (149.22)	3 (76.2)	4 (101.6)	1/2 (12.7)	2.6 (1.2)
ATTC307	3	250-400 MCM	4/0-336.4 MCM	.563-.744 (14.3-18.9)	5-7/8 (149.22)	3 (76.2)	4 (101.6)	1/2 (12.7)	2.7 (1.22)
ATTC309	3	350-600 MCM	336.4-477 MCM	.681-.893 (17.3-22.68)	6-1/8 (155.58)	3-1/4 (82.55)	4 (101.6)	1/2 (12.7)	2.9 (1.32)
ATTC3011	3	600-900 MCM	556.5-795 MCM	.870-1.108 (22.1-28.14)	6-3/8 (161.92)	3-1/2 (88.9)	4 (101.6)	1/2 (12.7)	4.2 (1.90)
ATTC3013	3	900-1250 MCM	715.5-1113 MCM	1.081-1.293 (27.46-32.84)	6-5/8 (168.28)	3-3/4 (95.25)	4 (101.6)	1/2 (12.7)	4.3 (1.95)
ATTC3015	3	1250-1600 MCM	1113-1272 MCM	1.289-1.459 (32.74-37.06)	7-1/4 (184.15)	4-1/4 (107.95)	4 (101.6)	5/8 (15.88)	5.0 (2.27)
ATTC3016	3	1500-2000 MCM	1272-1590 MCM	1.382-1.632 (35.1-41.45)	7-1/2 (190.5)	4-1/2 (114.3)	4 (101.6)	5/8 (15.88)	6.0 (2.7)
ATTC3018	3	2000-2500 MCM	—	1.632-1.824 (41.45-46.33)	7-3/4 (196.85)	4-3/4 (120.65)	4 (101.6)	5/8 (15.88)	6.4 (2.9)
ATTC347	3-1/2	250-400 MCM	4/0-336.4 MCM	.563-.744 (14.3-18.9)	6-1/8 (155.58)	3 (76.2)	4-1/4 (107.95)	1/2 (12.7)	3.0 (1.36)
ATTC349	3-1/2	350-600 MCM	336.4-477 MCM	.681-.893 (17.3-22.68)	6-3/8 (161.92)	3-1/4 (82.55)	4-1/4 (107.95)	1/2 (12.7)	3.5 (1.59)
ATTC3411	3-1/2	600-900 MCM	556.5-795 MCM	.870-1.108 (22.1-28.14)	6-5/8 (168.28)	3-1/2 (88.9)	4-1/4 (107.95)	1/2 (12.7)	3.7 (1.68)
ATTC3413	3-1/2	900-1250 MCM	715.5-1113 MCM	1.081-1.293 (27.46-32.84)	6-7/8 (174.62)	3-3/4 (95.25)	4-1/4 (107.95)	1/2 (12.7)	4.9 (2.22)
ATTC3415	3-1/2	1250-1600 MCM	1113-1272 MCM	1.289-1.459 (32.74-37.06)	7-5/8 (193.68)	4-1/4 (107.95)	4-1/4 (107.95)	5/8 (15.88)	5.1 (2.31)
*ATTC406	4	#4-250 MCM	#4-4/0 Sol.	.232-.575 (5.89-14.60)	6-1/2 (165.1)	3 (76.2)	4-1/4 (107.95)	1/2 (12.7)	4.3 (1.9)
ATTC409	4	350-600 MCM	336.4-477 MCM	.681-.893 (17.3-22.68)	6-3/4 (171.45)	3-1/4 (82.55)	4-1/4 (107.95)	1/2 (12.7)	3.5 (1.59)
ATTC4011	4	600-900 MCM	556.5-795 MCM	.870-1.108 (22.1-28.14)	7 (177.8)	3-1/2 (88.9)	4-1/4 (107.95)	1/2 (12.7)	3.8 (1.72)
ATTC4013	4	900-1250 MCM	715.5-1113 MCM	1.081-1.293 (27.46-32.84)	7-1/4 (184.15)	3-3/4 (95.25)	4-1/4 (107.95)	1/2 (12.7)	5.1 (2.31)
ATTC4015	4	1250-1600 MCM	1113-1272 MCM	1.289-1.459 (32.74-37.06)	7-7/8 (200.02)	4-1/4 (107.95)	4-1/4 (107.95)	5/8 (15.88)	5.3 (2.4)
ATTC4016	4	1500-2000 MCM	1272-1590 MCM	1.382-1.632 (35.1-41.45)	8-1/8 (206.38)	4-1/2 (114.3)	4-1/4 (107.95)	5/8 (15.88)	6.0 (2.72)
††ATTC5011	5	600-900 MCM	556.5-795 MCM	.870-1.108 (22.1-28.14)	7-5/8 (193.68)	3-1/2 (88.9)	5 (127.0)	††	7.7 (3.5)

** Tap connections are furnished with reversible caps.*
†† Main connection furnished with 5/8" dia. clamping bolts; tap connection furnished with 1/2" dia. clamping bolts.

TEES BOLTED ALUMINUM TUBING MAIN TO TWO CABLE TAP

ALUMINUM
ATT2C

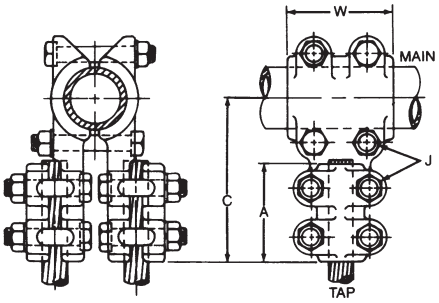

Aluminum alloy, tubing to double cable, tee for connecting aluminum-aluminum or aluminum-copper conductor combinations. Clamping bolts have hex-stops for one-wrench installation. Contact sealant is recommended.

Material: **Castings**—356-T6 aluminum alloy
Hardware—aluminum alloy

Product Data & Conductor Size

CATALOG NUMBER	CONDUCTOR RANGE				DIMENSIONS INCHES (MM)				APPROX. WT. EACH LBS. (KG)
	TUBING MAIN IPS/EHIPS	CABLE TAP							
		AAC	ACSR	DIA.	C	A	W	J	
*ATT2C066	3/4	#4-250 MCM	#4-4/0 Str.	.232-.575 (5.89-14.6)	4-5/8 (117.48)	3 (76.2)	2-1/2 (63.5)	1/2 (12.7)	2.2 (1.0)
*ATT2C106	1	#4-250 MCM	#4-4/0 Str.	.232-.575 (5.89-14.6)	4-3/4 (120.65)	3 (76.2)	2-3/4 (69.85)	1/2 (12.7)	2.3 (1.04)
ATT2C149	1-1/2	350-600 MCM	336.4-477 MCM	.681-.893 (17.3-22.68)	5-1/4 (133.35)	3-1/4 (82.55)	3-1/4 (82.55)	1/2 (12.7)	4.2 (1.90)
ATT2C207	2	250-400 MCM	4/0-336.4 MCM	.563-.744 (14.3-18.9)	5-1/4 (133.35)	3 (76.2)	3-1/2 (88.9)	1/2 (12.7)	3.7 (1.68)
ATT2C209	2	350-600 MCM	336.4-477 MCM	.681-.893 (17.3-22.68)	5-1/2 (139.7)	3-1/4 (82.55)	3-1/2 (88.9)	1/2 (12.7)	3.9 (1.77)
ATT2C2011	2	600-900 MCM	556.5-795 MCM	.870-1.108 (22.1-28.14)	5-3/4 (146.05)	3-1/2 (88.9)	3-1/2 (88.9)	1/2 (12.7)	5.2 (2.36)
ATT2C2013	2	900-1250 MCM	715.5-1113 MCM	1.081-1.293 (27.46-32.84)	6 (152.4)	3-3/4 (95.25)	3-1/2 (88.9)	1/2 (12.7)	6.1 (2.77)
ATT2C247	2-1/2	250-400 MCM	4/0-336.4 MCM	.563-.744 (14.3-18.9)	5-1/2 (139.7)	3 (76.2)	3-3/4 (95.25)	1/2 (12.7)	4.2 (1.90)
ATT2C249	2-1/2	350-600 MCM	336.4-477 MCM	.681-.893 (17.3-22.68)	5-3/4 (146.05)	3-1/4 (82.55)	3-3/4 (95.25)	1/2 (12.7)	5.1 (2.31)
ATT2C2411	2-1/2	600-900 MCM	556.5-795 MCM	.870-1.108 (22.1-28.14)	6 (152.4)	3-1/2 (88.9)	3-3/4 (95.25)	1/2 (12.7)	6.3 (2.86)
ATT2C2413	2-1/2	900-1250 MCM	715.5-1113 MCM	1.081-1.293 (27.46-32.84)	6-1/4 (158.75)	3-3/4 (95.25)	3-3/4 (95.25)	1/2 (12.7)	6.6 (2.99)
ATT2C309	3	350-600 MCM	336.4-477 MCM	.681-.893 (17.3-22.68)	6-1/8 (155.58)	3-1/4 (82.55)	4 (101.6)	1/2 (12.7)	5.1 (2.31)
ATT2C3011	3	600-900 MCM	556.5-795 MCM	.870-1.108 (22.1-28.14)	6-3/8 (161.92)	3-1/2 (88.9)	4 (101.6)	1/2 (12.7)	6.8 (3.08)
ATT2C3013	3	900-1250 MCM	715.5-1113 MCM	1.081-1.293 (27.46-32.84)	6-5/8 (168.28)	3-3/4 (95.25)	4 (101.6)	1/2 (12.7)	7.5 (3.40)
ATT2C3015	3	1250-1600 MCM	1113-1272 MCM	1.289-1.459 (32.74-37.06)	7-1/4 (184.15)	4-1/4 (107.95)	4 (101.6)	5/8 (15.88)	8.6 (3.9)
ATT2C3411	3-1/2	600-900 MCM	556.5-795 MCM	.870-1.108 (22.1-28.14)	6-5/8 (168.28)	3-1/2 (88.9)	4-1/4 (107.95)	1/2 (12.7)	6.5 (2.95)
ATT2C3413	3-1/2	900-1250 MCM	715.5-1113 MCM	1.081-1.293 (27.46-32.84)	6-7/8 (174.62)	3-3/4 (95.25)	4-1/4 (107.95)	1/2 (12.7)	8.3 (3.76)
ATT2C3415	3-1/2	1250-1600 MCM	1113-1272 MCM	1.289-1.459 (32.74-37.06)	7-1/2 (190.5)	4-1/4 (107.95)	4-1/4 (107.95)	5/8 (15.88)	8.9 (4.04)
ATT2C4011	4	600-900 MCM	556.5-795 MCM	.870-1.108 (22.1-28.14)	6-7/8 (174.62)	3-1/2 (88.9)	4-1/4 (107.95)	1/2 (12.7)	6.7 (3.04)
ATT2C4013	4	900-1250 MCM	715.5-1113 MCM	1.081-1.293 (27.46-32.84)	7-1/8 (180.98)	3-3/4 (95.25)	4-1/4 (107.95)	1/2 (12.7)	8.4 (3.81)
ATT2C4015	4	1250-1600 MCM	1113-1272 MCM	1.289-1.459 (32.74-37.06)	7-7/8 (200.02)	4-1/4 (107.95)	4-1/4 (107.95)	5/8 (15.88)	9.3 (4.22)
ATT2C4016	4	1500-2000 MCM	1272-1590 MCM	1.382-1.632 (35.1-41.45)	8-1/4 (209.55)	4-1/2 (114.3)	4-1/4 (107.95)	5/8 (15.88)	10.5 (4.76)

** Tap connections are furnished with reversible cable caps.*

TEES BOLTED ALUMINUM TUBING MAIN TO TUBING TAP

ALUMINUM

ATTS & ATTH

Aluminum alloy, tubing to tubing, tee for connecting aluminum-aluminum or aluminum-copper conductor combinations. Clamping bolts have hex-stops for one-wrench installation. Contact sealant is recommended.

Material: **Castings**—356-T6 aluminum alloy
Clamping hardware—aluminum alloy

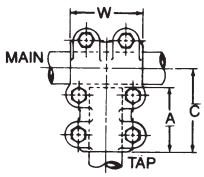

TYPE ATTS

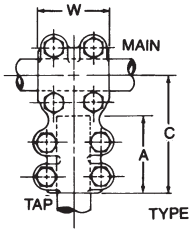

TYPE ATTH

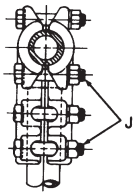

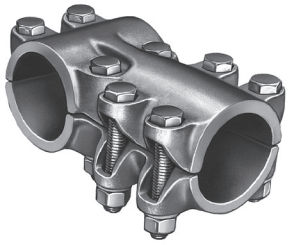

Product Data & Conductor Size

CATALOG NUMBER	ALUMINUM CONDUCTOR SIZE		DIMENSIONS INCHES (MM)				APPROX. WT. EACH LBS. (KG)
	TUBING MAIN IPS/EHIPS	TUBING TAP IPS/EHIPS	C	A	W	J	
†ATTS0606	3/4	3/4	3-3/8 (85.72)	2-5/8 (66.68)	2-1/2 (63.5)	1/2 (12.7)	1.4 (.64)
†ATTS1004	1	1/2	3-1/2 (88.9)	2-1/2 (63.5)	2-3/4 (69.85)	1/2 (12.7)	1.4 (.64)
†ATTS1006	1	3/4	3-1/2 (88.9)	2-5/8 (66.68)	2-3/4 (69.85)	1/2 (12.7)	1.5 (.68)
†ATTS1010	1	1	3-5/8 (92.08)	2-3/4 (69.85)	2-3/4 (69.85)	1/2 (12.7)	1.7 (.77)
ATTH1206	1-1/4	3/4	4-1/2 (114.3)	2-1/2 (63.5)	3 (76.2)	1/2 (12.7)	1.6 (.72)
ATTH1210	1-1/4	1	4-3/4 (120.65)	2-3/4 (69.85)	3 (76.2)	1/2 (12.7)	1.8 (.82)
ATTH1212	1-1/4	1-1/4	5 (127.0)	3 (76.2)	3 (76.2)	1/2 (12.7)	2.6 (1.18)
ATTH1406	1-1/2	3/4	4-1/2 (114.3)	2-1/2 (63.5)	3-1/4 (82.55)	1/2 (12.7)	1.7 (.77)
ATTH1410	1-1/2	1	4-3/4 (120.65)	2-3/4 (69.85)	3-1/4 (82.55)	1/2 (12.7)	2.0 (.91)
ATTH1412	1-1/2	1-1/4	5 (127.0)	3 (76.2)	3-1/4 (82.55)	1/2 (12.7)	2.8 (1.27)
ATTH1414	1-1/2	1-1/2	5-1/4 (133.35)	3-1/4 (82.55)	3-1/4 (82.55)	1/2 (12.7)	3.2 (1.45)
ATTH2006	2	3/4	4-3/4 (120.65)	2-1/2 (63.5)	3-1/2 (88.9)	1/2 (12.7)	1.9 (.86)
ATTH2010	2	1	5 (127.0)	2-3/4 (69.85)	3-1/2 (88.9)	1/2 (12.7)	2.2 (1.0)
ATTH2012	2	1-1/4	5-1/4 (133.35)	3 (76.2)	3-1/2 (88.9)	1/2 (12.7)	3.0 (1.36)
ATTH2014	2	1-1/2	5-1/2 (139.7)	3-1/4 (82.55)	3-1/2 (88.9)	1/2 (12.7)	3.5 (1.59)
ATTH2020	2	2	5-3/4 (146.05)	3-1/2 (88.9)	3-1/2 (88.9)	1/2 (12.7)	5.2 (2.36)
ATTH2406	2-1/2	3/4	5 (127.0)	2-1/2 (63.5)	3-3/4 (95.25)	1/2 (12.7)	2.1 (.95)
ATTH2410	2-1/2	1	5-1/4 (133.35)	2-3/4 (69.85)	3-3/4 (95.25)	1/2 (12.7)	2.4 (1.09)
ATTH2412	2-1/2	1-1/4	5-1/2 (139.7)	3 (76.2)	3-3/4 (95.25)	1/2 (12.7)	3.3 (1.50)
ATTH2414	2-1/2	1-1/2	5-3/4 (146.05)	3-1/4 (82.55)	3-3/4 (95.25)	1/2 (12.7)	3.7 (1.68)
ATTH2420	2-1/2	2	6 (152.4)	3-1/2 (88.9)	3-3/4 (95.25)	1/2 (12.7)	5.6 (2.54)

† Are furnished with 6 clamping bolts, only.
Continued on next page.

TEES BOLTED ALUMINUM TUBING MAIN TO TUBING TAP (CONTINUED)

Product Data & Conductor Size

CATALOG NUMBER	ALUMINUM CONDUCTOR SIZE		DIMENSIONS INCHES (MM)				APPROX. WT. EACH LBS. (KG)
	TUBING MAIN IPS/EHIPS	TUBING TAP IPS/EHIPS	C	A	W	J	
ATTH2424	2-1/2	2-1/2	6-1/2 (165.1)	3-3/4 (95.25)	3-3/4 (95.25)	5/8 (15.88)	6.8 (3.08)
ATTH3006	3	3/4	5-3/8 (136.52)	2-1/2 (63.5)	4 (101.6)	1/2 (12.7)	2.3 (1.04)
ATTH3010	3	1	5-5/8 (142.88)	2-3/4 (69.85)	4 (101.6)	1/2 (12.7)	2.7 (1.22)
ATTH3012	3	1-1/4	5-7/8 (149.22)	3 (76.2)	4 (101.6)	1/2 (12.7)	3.5 (1.59)
ATTH3014	3	1-1/2	6-1/8 (155.58)	3-1/4 (82.55)	4 (101.6)	1/2 (12.7)	4.0 (1.81)
ATTH3020	3	2	6-3/8 (161.92)	3-1/2 (88.9)	4 (101.6)	1/2 (12.7)	5.6 (2.54)
ATTH3024	3	2-1/2	6-5/8 (168.28)	3-3/4 (95.25)	4 (101.6)	5/8 (15.88)	7.2 (3.26)
ATTH3030	3	3	7 (177.8)	4 (101.6)	4 (101.6)	5/8 (15.88)	10.4 (4.72)
ATTH3410	3-1/2	1	5-7/8 (149.22)	2-3/4 (69.85)	4-1/4 (107.95)	1/2 (12.7)	2.8 (1.27)
ATTH3420	3-1/2	2	6-5/8 (168.28)	3-1/2 (88.9)	4-1/4 (107.95)	1/2 (12.7)	6.4 (2.90)
ATTH3424	3-1/2	2-1/2	7 (177.8)	3-3/4 (95.25)	4-1/4 (107.95)	5/8 (15.88)	7.6 (3.45)
ATTH3430	3-1/2	3	7-1/4 (184.15)	4 (101.6)	4-1/4 (107.95)	5/8 (15.88)	8.9 (4.04)
ATTH3434	3-1/2	3-1/2	7-1/2 (190.5)	4-1/4 (107.95)	5 (127.0)	5/8 (15.88)	12.8 (5.81)
ATTH4010	4	1	6-1/8 (155.58)	2-3/4 (69.85)	4-1/4 (107.95)	1/2 (12.7)	3.2 (1.45)
ATTH4014	4	1-1/2	6-5/8 (168.28)	3-1/4 (82.55)	4-1/4 (107.95)	1/2 (12.7)	4.8 (2.18)
ATTH4020	4	2	6-7/8 (169.82)	3-1/2 (88.9)	4-1/4 (107.95)	1/2 (12.7)	6.4 (2.90)
ATTH4024	4	2-1/2	7-3/8 (187.32)	3-3/4 (95.25)	4-1/4 (107.95)	5/8 (15.88)	8.0 (3.63)
ATTH4030	4	3	7-5/8 (193.68)	4 (101.6)	4-1/4 (107.95)	5/8 (15.88)	11.2 (5.08)
ATTH4034	4	3-1/2	8-1/8 (206.38)	4-1/4 (107.95)	4-1/4 (107.95)	5/8 (15.88)	14.0 (6.35)
ATTH4040	4	4	8 (203.2)	4-1/4 (107.95)	4-1/4 (107.95)	5/8 (15.88)	14.8 (6.71)
ATTH5024	5	2-1/2	9 (228.6)	3-3/4 (95.25)	5 (127.0)	5/8 (15.88)	8.4 (3.81)
ATTH5030	5	3	8 (203.2)	4 (101.6)	5 (127.0)	5/8 (15.88)	10.9 (4.94)
ATTH5040	5	4	8-3/4 (222.25)	4-1/4 (107.95)	5 (127.0)	5/8 (15.88)	16.0 (7.26)
ATTH5050	5	5	10 (254.0)	5-1/4 (133.35)	5 (127.0)	5/8 (15.88)	17.3 (7.85)
††ATTH6020	6	2	8-1/4 (209.55)	3-5/8 (92.08)	6 (152.4)	††	9.5 (4.31)
ATTH6030	6	3	8-5/8 (219.08)	4 (101.6)	6 (152.4)	5/8 (15.88)	12.8 (5.81)
ATTH6060	6	6	11-1/4 (285.75)	6 (152.4)	6 (152.4)	5/8 (15.88)	21.0 (9.52)

†† Main connection is furnished with 5/8" dia. clamping bolts; Tap connection furnished with 1/2" dia. clamping bolts.

TEES BOLTED ALUMINUM TUBING MAIN TO TUBING TAP

ALUMINUM
ATT15

Aluminum alloy, angle tee for connecting aluminum-aluminum or aluminum-copper tubing combinations at 15 degrees. Clamping bolts have hex-stops for one-wrench installation. Contact sealant is recommended.

Material: **Castings**—356-T6 aluminum alloy
Hardware—aluminum alloy

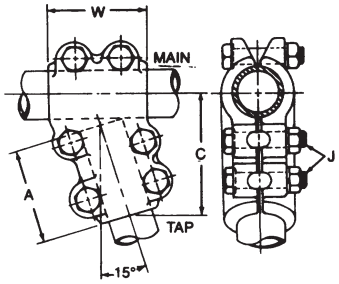

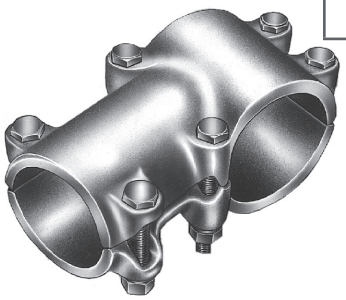

Product Data & Conductor Size

CATALOG NUMBER	ALUMINUM CONDUCTOR SIZE		DIMENSIONS INCHES (MM)				APPROX. WT. EACH LBS. (KG)
	TUBING MAIN IPS/EHIPS	TUBING TAP IPS/EHIPS	C	A	W	J	
ATT151006	1	3/4	3-3/4 (95.25)	2-1/2 (63.5)	2-3/4 (69.85)	1/2 (12.7)	1.6 (.72)
ATT151210	1-1/4	1	4-1/8 (104.78)	2-1/2 (63.5)	3 (76.2)	1/2 (12.7)	2.0 (.91)
ATT151410	1-1/2	1	4-1/8 (104.78)	2-3/4 (69.85)	3-1/4 (82.55)	1/2 (12.7)	2.4 (1.09)
ATT151412	1-1/2	1-1/4	4-1/2 (114.3)	3 (76.2)	3-1/4 (82.55)	1/2 (12.7)	2.7 (1.22)
ATT152010	2	1	4-3/8 (111.12)	2-3/4 (69.85)	3-1/2 (88.9)	1/2 (12.7)	2.8 (1.27)
ATT152012	2	1-1/4	4-3/4 (120.65)	3-1/8 (79.38)	3-1/2 (88.9)	1/2 (12.7)	3.4 (1.54)
ATT152014	2	1-1/2	5-1/8 (130.18)	3-3/8 (85.72)	3-1/2 (88.9)	1/2 (12.7)	3.6 (1.63)
ATT152410	2-1/2	1	4-5/8 (117.48)	2-3/4 (69.85)	3-3/4 (95.25)	1/2 (12.7)	3.7 (1.68)
ATT152412	2-1/2	1-1/4	5 (127.0)	3-1/8 (79.38)	3-3/4 (95.25)	1/2 (12.7)	3.9 (1.77)
ATT152414	2-1/2	1-1/2	5-3/8 (136.52)	3-1/4 (82.55)	3-3/4 (95.25)	1/2 (12.7)	4.2 (1.90)
ATT152420	2-1/2	2	5-5/8 (142.88)	3-1/2 (88.9)	3-3/4 (95.25)	1/2 (12.7)	4.8 (2.18)
ATT153014	3	1-1/2	5-3/8 (136.52)	3-1/4 (82.55)	4 (101.6)	1/2 (12.7)	5.5 (2.49)
ATT153020	3	2	6 (152.4)	3-1/2 (88.9)	4 (101.6)	1/2 (12.7)	6.3 (2.86)
ATT153024	3	2-1/2	6-1/4 (158.75)	3-3/4 (95.25)	4 (101.6)	1/2 (12.7)	6.8 (3.08)
ATT153420	3-1/2	2	6-1/4 (158.75)	3-1/2 (88.9)	4-1/2 (114.3)	1/2 (12.7)	7.9 (3.58)
ATT153424	3-1/2	2-1/2	6-1/2 (165.1)	3-3/4 (95.25)	4-1/4 (107.95)	1/2 (12.7)	8.2 (3.72)
ATT153430	3-1/2	3	6-5/8 (168.28)	3-3/4 (95.25)	4-1/4 (107.95)	1/2 (12.7)	8.5 (3.86)
ATT154020	4	2	6-7/16 (163.5)	3-1/2 (88.9)	4 (101.6)	1/2 (12.7)	8.5 (3.86)
ATT154024	4	2-1/2	6-7/8 (174.62)	3-3/4 (95.25)	4 (101.6)	1/2 (12.7)	8.7 (3.95)
ATT154030	4	3	7-3/16 (182.60)	4 (101.6)	4-1/4 (107.95)	1/2 (12.7)	8.8 (4.0)
ATT155014	5	1-1/2	6-7/8 (174.62)	3-1/4 (82.55)	5 (127.0)	1/2 (12.7)	8.0 (3.6)
ATT155024	5	2-1/2	7-3/8 (187.32)	3-3/4 (95.25)	5 (127.0)	1/2 (12.7)	8.8 (4.0)
ATT155030	5	3	8 (203.2)	4-1/4 (107.95)	5 (127.0)	5/8 (15.88)	9.9 (4.5)
ATT155034	5	3-1/2	8 (203.2)	4-1/4 (107.95)	5 (127.0)	5/8 (15.88)	9.9 (4.5)

TEES BOLTED ALUMINUM TUBING MAIN TO TUBING TAP

ALUMINUM
ATT215

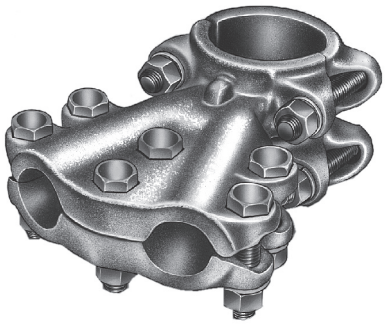

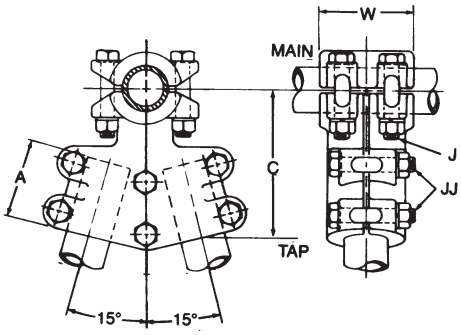

Aluminum alloy, tubing to tubing, angle tee for connecting aluminum-aluminum or aluminum-copper tubing combinations at 15 degrees from perpendicular. Clamping bolts have hex-stops for one-wrench installation. Contact sealant is recommended.

Material: **Castings**—356-T6 aluminum alloy
Hardware—aluminum alloy

SC 10

Product Data & Conductor Size

CATALOG NUMBER	ALUMINUM CONDUCTOR SIZE		DIMENSIONS INCHES (MM)					APPROX. WT. EACH LBS. (KG)
	TUBING MAIN IPS/EHIPS	TUBING TAP IPS/EHIPS	C	A	W	J	JJ	
ATT2151006	1	3/4	4-7/8 (123.82)	2-1/2 (63.5)	2-3/4 (69.85)	1/2 (12.7)	1/2 (12.7)	2.2 (1.0)
ATT2151210	1-1/4	1	5-3/4 (146.05)	2-3/4 (69.85)	3 (76.2)	1/2 (12.7)	1/2 (12.7)	3.9 (1.77)
ATT2151410	1-1/2	1	5-7/8 (149.22)	2-3/4 (69.85)	3-1/4 (82.55)	1/2 (12.7)	1/2 (12.7)	4.2 (1.90)
ATT2151412	1-1/2	1-1/4	5-7/8 (149.22)	3 (76.2)	3-1/4 (82.55)	1/2 (12.7)	1/2 (12.7)	5.9 (2.68)
ATT2152010	2	1	5-3/4 (146.05)	2-3/4 (69.85)	3-1/2 (88.9)	1/2 (12.7)	1/2 (12.7)	4.9 (2.22)
ATT2152012	2	1-1/4	6-1/8 (155.58)	3 (76.2)	3-1/2 (88.9)	1/2 (12.7)	1/2 (12.7)	6.3 (2.86)
ATT2152014	2	1-1/2	6-1/2 (165.1)	3-3/8 (85.72)	3-1/2 (88.9)	1/2 (12.7)	1/2 (12.7)	7.5 (3.40)
ATT2152412	2-1/2	1-1/4	6-1/8 (155.58)	3-1/8 (79.38)	3-5/8 (92.08)	1/2 (12.7)	1/2 (12.7)	7.0 (3.18)
ATT2152414	2-1/2	1-1/2	6-1/4 (158.75)	3-1/4 (82.55)	3-5/8 (92.08)	1/2 (12.7)	1/2 (12.7)	7.7 (3.49)
ATT2152420	2-1/2	2	7 (177.8)	3-5/8 (92.08)	3-3/4 (95.25)	1/2 (12.7)	1/2 (12.7)	8.3 (3.76)
ATT2153014	3	1-1/2	6-1/4 (158.75)	3-1/4 (82.55)	4 (101.6)	1/2 (12.7)	1/2 (12.7)	8.3 (3.76)
ATT2153020	3	2	6-3/4 (171.45)	3-1/2 (88.9)	4 (101.6)	1/2 (12.7)	1/2 (12.7)	8.9 (4.04)
ATT2153024	3	2-1/2	7-5/8 (193.68)	3-3/4 (95.25)	4 (101.6)	1/2 (12.7)	1/2 (12.7)	9.8 (4.44)
ATT2153420	3-1/2	2	6-3/4 (171.45)	3-1/2 (88.9)	4-1/4 (107.95)	1/2 (12.7)	1/2 (12.7)	9.7 (4.40)
ATT2153424	3-1/2	2-1/2	8-1/8 (206.38)	3-3/4 (95.25)	4-1/4 (107.95)	1/2 (12.7)	1/2 (12.7)	10.6 (4.81)
ATT2153430	3-1/2	3	7-1/2 (190.5)	4 (101.6)	4-1/4 (107.95)	1/2 (12.7)	1/2 (12.7)	12.4 (5.62)
ATT2154020	4	2	6-7/8 (174.62)	3-1/2 (88.9)	4-1/4 (107.95)	1/2 (12.7)	1/2 (12.7)	7.3 (3.3)
ATT2154024	4	2-1/2	7-7/8 (200.02)	3-3/4 (95.25)	4-1/4 (107.95)	5/8 (15.88)	1/2 (12.7)	9.0 (4.1)
ATT2155024	5	2-1/2	8-3/4 (222.25)	3-3/4 (95.25)	5 (127.0)	5/8 (15.88)	1/2 (12.7)	11.2 (5.1)
ATT2155034	5	3-1/2	9-1/8 (231.78)	4-1/4 (107.95)	5 (127.0)	5/8 (15.88)	5/8 (15.88)	15.6 (7.1)
ATT2156030	6	3	8-3/4 (222.25)	4 (101.6)	5 (127.0)	5/8 (15.88)	5/8 (15.88)	17.3 (7.8)

TEES BOLTED ALUMINUM TUBING MAIN TO FLAT BAR TAP

ALUMINUM
ATTF

Aluminum alloy, tube to flat, tee for connecting aluminumtubing to aluminum or copper flat pad combinations. Flat pads have contact surface on one side. NEMA hole spacing is standard. Contact sealant is recommended.

Material: **Castings**—356-T6 aluminum alloy
Clamping hardware—aluminum alloy

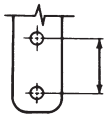

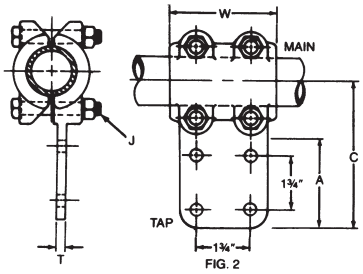

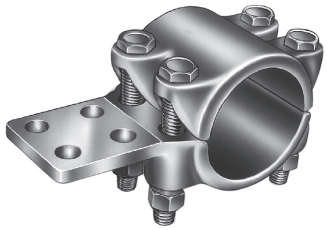

Product Data & Conductor Size

CATALOG NUMBER	FIG. NO.	CONDUCTOR SIZE: TUBING MAIN IPS/EHIPS	CONDUCTOR SIZE: FLAT BAR TAP WIDTH—INCHES	DIMENSIONS INCHES (MM): C	A	W	T	J	APPROX. WT. EACH LBS. (KG)
ATTF06201	1	3/4	2	4-7/8 (123.82)	3-1/4 (82.55)	2-1/2 (63.5)	3/8 (9.52)	1/2 (12.7)	1.3 (.6)
ATTF06301	2	3/4	3	5 (127.0)	3-1/4 (82.55)	2-1/2 (63.5)	3/8 (9.52)	1/2 (12.7)	1.6 (.72)
ATTF10201	1	1	2	5 (127.0)	3-1/4 (82.55)	2-3/4 (69.85)	3/8 (9.52)	1/2 (12.7)	1.4 (.6)
ATTF10301	2	1	3	5 (127.0)	3-1/4 (82.55)	2-3/4 (69.85)	3/8 (9.52)	1/2 (12.7)	1.6 (.72)
ATTF12201	1	1-1/4	2	5-1/8 (130.18)	3-1/4 (82.55)	3 (76.2)	3/8 (9.52)	1/2 (12.7)	1.7 (.8)
ATTF12301	2	1-1/4	3	5-1/8 (130.18)	3-1/4 (82.55)	3 (76.2)	3/8 (9.52)	1/2 (12.7)	1.7 (.8)
ATTF12401	2	1-1/4	4	5-1/8 (130.18)	3-1/8 (79.38)	3 (76.2)	3/8 (9.52)	1/2 (12.7)	1.9 (.86)
ATTF14201	1	1-1/2	2	5 (127.0)	3-1/8 (79.38)	3-1/4 (82.55)	3/8 (9.52)	1/2 (12.7)	2.2 (1.0)
ATTF14301	2	1-1/2	3	5-1/4 (133.35)	3-1/4 (82.55)	3-1/4 (82.55)	3/8 (9.52)	1/2 (12.7)	1.8 (.82)
ATTF14401	2	1-1/2	4	6-1/8 (155.58)	4-1/8 (104.78)	3-1/4 (82.55)	3/8 (9.52)	1/2 (12.7)	1.9 (.86)
ATTF20201	1	2	2	5-3/4 (146.05)	3-1/4 (82.55)	3-1/2 (88.9)	3/8 (9.52)	1/2 (12.7)	2.2 (1.0)
ATTF20301	2	2	3	5-1/2 (139.7)	3-1/4 (82.55)	3-1/2 (88.9)	3/8 (9.52)	1/2 (12.7)	2.3 (1.04)
ATTF20401	2	2	4	6-1/2 (165.1)	4-1/8 (104.78)	3-1/2 (88.9)	3/8 (9.52)	1/2 (12.7)	2.7 (1.22)
ATTF24301	2	2-1/2	3	5-7/8 (149.22)	3-1/4 (82.55)	3-3/4 (95.25)	1/2 (12.7)	5/8 (15.88)	2.8 (1.27)
ATTF24401	2	2-1/2	4	7 (177.8)	4-1/8 (104.78)	3-3/4 (95.25)	1/2 (12.7)	5/8 (15.88)	2.9 (1.32)
ATTF30301	2	3	3	6-1/8 (155.58)	3-1/4 (82.55)	4 (101.6)	1/2 (12.7)	5/8 (15.88)	4.2 (1.90)
ATTF30401	2	3	4	7-1/8 (180.98)	4-1/4 (107.95)	4 (101.6)	1/2 (12.7)	5/8 (15.88)	4.3 (1.95)
ATTF34401	2	3-1/2	4	7-3/4 (196.85)	4-1/4 (107.95)	4-1/4 (107.95)	5/8 (15.88)	5/8 (15.88)	4.8 (2.18)
ATTF40201	1	4	2	6-7/8 (174.62)	3-1/4 (82.55)	4-1/4 (107.95)	5/8 (15.88)	5/8 (15.88)	4.9 (2.2)
ATTF40301	2	4	3	6-7/8 (174.62)	3-1/4 (82.55)	4-1/4 (107.95)	5/8 (15.88)	5/8 (15.88)	4.9 (2.2)
ATTF40401	2	4	4	8 (203.2)	4-1/4 (107.95)	4-1/4 (107.95)	5/8 (15.88)	5/8 (15.88)	5.3 (2.4)
ATTF50401	2	5	4	8-1/2 (215.9)	4-1/4 (107.95)	5 (127.0)	5/8 (15.88)	5/8 (15.88)	6.8 (3.08)
ATTF60401	2	6	4	8-7/8 (225.42)	4-1/4 (107.95)	6 (152.4)	3/4 (19.05)	5/8 (15.88)	8.5 (3.86)

TEES BOLTED BRONZE CABLE MAIN TO CABLE TAP

BRONZE
TCC

Bronze alloy tee for connecting copper cable main to copper cable tap. Clamping bolts have hex-stops for onewrench installation. All sizes furnished with reversible cable caps.

Material: **Castings**—bronze alloy
Hardware—silicon bronze or stainless steel

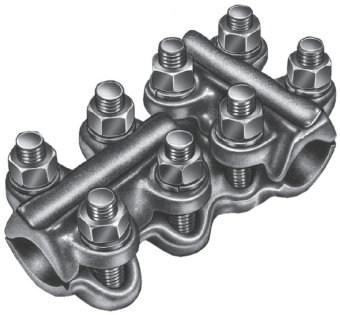

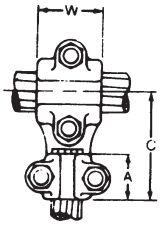

Fig. 1

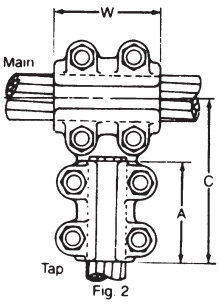

Fig. 2

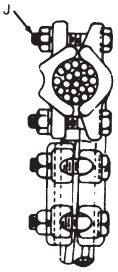

SC 12

Product Data & Conductor Size

CATALOG NUMBER	FIG. NO.	COPPER CONDUCTOR RANGE				DIMENSIONS INCHES (MM)				APPROX. WT. EACH LBS. (KG)
		MAIN		TAP						
		CABLE	DIA.	CABLE	DIA.	C	A	W	J	
TCC4022022	1	# 6 Sol.- 2/0 Str.	.162 - 419 (4.11-10.64)	# 6 Sol.— 2/0 Str.	.162–.419 (4.11–10.64)	2-5/8 (66.68)	1-1/2 (38.1)	1-1/2 (38.1	3/8 (9.52)	1.1 (.50)
TCC4025022	1	# 4 Sol. - 250 MCM	.204 -.575 (5.18 - 14.60)	# 6 Sol.— 2/0 Str.	.162–.419 (4.11–10.64)	2-5/8 (66.68)	1-1/2 (38.1)	1-1/2 (38.1	3/8 (9.52)	1.4 (.64)
TCC4 025025	1			# 4 Sol. — 250 MCM	.204–.575 (5.18–14.60)	2-3/4 (69.85)	1-3/4 (44.45)	1-3/4 (44.45)	3/8 (9.52)	1.4 (.64)
TCC4025050	1			1/0 Sol. — 500 MCM	.325–.813 (8.26–20.65)	3-3/8 (85.72)	2-1/4 (57.15)	1-3/4 (44.45)	3/8 (9.52)	1.4 (.64)
TCC4050022	1	1/0 Sol. - 500 MCM	.325-.813 (8.26 - 20.65)	# 6 Sol.— 2/0 Str.	.162–.419 (4.11–10.64)	2-5/8 (66.68)	1-1/2 (38.1)	2-1/4 (57.15)	3/8 (9.52)	1.4 (.64)
TCC4050025	1			# 4 Sol. — 250 MCM	.204–.575 (5.18–14.60)	2-7/8 (73.02)	1-1/2 (38.1)	2-1/4 (57.15)	3/8 (9.52)	1.6 (7.2)
TCC8025025	2	# 4 Sol. - 250 MCM	.204 - .575 (5.18 - 14.60)	# 4 Sol. — 250 MCM	.204–.575 (5.18–14.60)	4-1/8 (104.78)	2-3/4 (69.85)	2-3/4 (69.85)	1/2 (12.7)	2.7 (1.22)
TCC80250253	2			# 4 Sol. — 250 MCM	.204–.575 (5.18–14.60)	3-5/8 (92.08)	2-1/2 (63.5)	2-1/2 (63.5)	3/8 (9.52)	2.3 (1.04)
TCC8050025	2	1/0 Sol. - 500 MCM	.325 - .812 (8.26 - 20.65)	# 4 Sol. — 250 MCM	.204–.575 (5.18–14.60)	3-7/8 (98.42)	2-1/2 (63.5)	2-3/4 (69.85)	1/2 (12.7)	2.9 (1.32)
TCC80500253	2			# 4 Sol. — 250 MCM	.204–.575 (5.18–14.60)	4 (101.6)	2-3/4 (69.85)	2-3/4 (69.85)	3/8 (9.52)	2.3 (1.04)
TCC8050050	2			1/0 Sol. — 500 MCM	.325–.813 (8.26–20.65)	4-1/8 (104.78)	2-3/4 (69.85)	2-3/4 (69.85)	1/2 (12.7)	3.4 (1.54)
TCC80500503	2			1/0 Sol. — 500 MCM	.325–.813 (8.26–20.65)	4 (101.6)	2-3/4 (69.85)	2-3/4 (69.85)	3/8 (9.52)	3.0 (1.36)
TCC8080080	2	2/0 Sol. - 800 MCM	.365 - 1.031 (9.27 - 26.19)	2/0 Sol. — 800 MCM	.365–1.031 (9.27–26.19)	5-5/8 (142.88)	4 (101.6)	4 (101.6)	1/2 (12.7)	4.6 (2.09)
TCC8100025	2	4/0 Str.- 1000 MCM	.460 - 1.152 (11.68 - 29.26)	#4 Sol.— 250 MCM	.204–.575 (5.18–14.60)	4-1/8 (104.78)	2-1/2 (63.5)	3-1/2 (88.9)	1/2 (12.7)	3.9 (1.77)
TCC81000253	2			#4 Sol.— 250 MCM	.204–.575 (5.18–14.60)	4-1/8 (104.78)	2-3/4 (69.85)	3-1/2 (88.9)	3/8 (9.52)	3.3 (1.50)
TCC8100050	2			1/0 Sol. — 500 MCM	.325–.813 (8.26–20.65)	4-3/8 (111.12)	2-3/4 (69.85)	3-1/2 (88.9)	1/2 (12.7)	4.0 (1.81)
TCC8100100	2			4/0 Str.— 1000 MCM	.460–1.152 (11.68–29.26)	5-1/8 (130.18)	3-1/2 (88.9)	3-1/2 (88.9)	1/2 (12.7)	5.6 (2.54)

Continued on next page.

TEES BOLTED BRONZE CABLE MAIN TO CABLE TAP (CONTINUED)

Product Data & Conductor Size

CATALOG NUMBER	FIG. NO.	COPPER CONDUCTOR RANGE				DIMENSIONS INCHES (MM)				APPROX. WT. EACH LBS. (KG)
		MAIN		TAP						
		CABLE	DIA.	CABLE	DIA.	C	A	W	J	
TCC8150025	2	250 - 1500 MCM	.574 - 1.412 (14.58 - 35.86)	# 4Sol. — 250 MCM	.204–.575 (5.18–14.60)	4-1/4 (107.95)	2-1/2 (63.5)	3-3/4 (95.25)	1/2 (12.7)	4.7 (2.13)
TCC8150050	2			1/0 Sol. — 500 MCM	.325–.813 (8.26–20.65)	4-1/2 (114.3)	2-3/4 (69.85)	3-1/4 (82.55)	3/8 (9.52)	5.4 (2.45)
TCC8150100	2			4/0 Str. — 1000 MCM	.460 - 1.152 (11.68 - 29.26)	6-1/4 (158.75)	4-1/2 (114.3)	4-1/2 (114.3)	1/2 (12.7)	6.2 (2.81)
TCC8150150	2			250 - 1500 MCM	.574 - 1.412 (14.58 - 35.86)	6-1/4 (158.75)	4-1/2 (114.3)	4-1/2 (114.3)	1/2 (12.7)	6.6 (2.99)
TCC8200050	2	500 - 2000 MCM	.811 - 1.632 (20.60 - 41.45)	1/0 Sol. — 500 MCM	.325–.813 (8.26–20.65)	5-3/4 (146.05)	3-3/4 (95.25)	3-1/4 (82.55)	1/2 (12.7)	6.0 (2.72)
TCC8200100	2			4/0 Str. — 1000 MCM	.365 - 1.152 (9.27 - 29.26)	5-1/4 (133.35)	3-1/2 (88.9)	4 (101.6)	1/2 (12.7)	7.5 (3.40)
TCC8200200	2			500 - 2000 MCM	.811 - 1.632 (20.60 - 41.45)	5-3/4 (146.05)	4 (101.6)	4 (101.6)	1/2 (12.7)	10.8 (4.54)

TEES BOLTED BRONZE
TWO CABLE MAIN TO CABLE TAP

BRONZE
T2CC

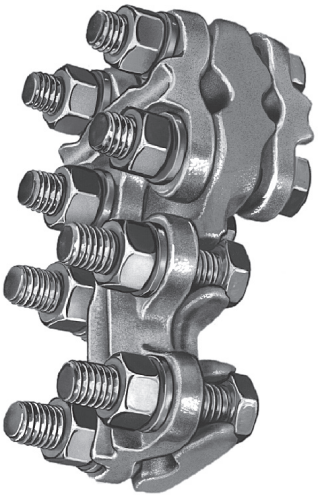

Bronze alloy tee for connecting two copper cable mains to copper cable tap. Clamping bolts have hex-stops for onewrench installation. All sizes furnished with reversible cable caps.

Material: **Castings**—bronze alloy
Hardware—silicon bronze or stainless steel

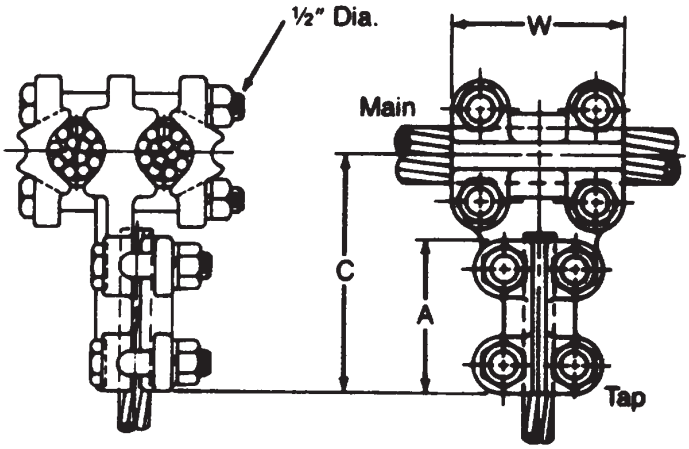

SC 14

Product Data & Conductor Size

CATALOG NUMBER	COPPER CONDUCTOR RANGE				DIMENSIONS INCHES (MM)			APPROX. WT. EACH LBS. (KG)
	MAIN		TAP					
	TWO CABLE	DIA.	CABLE	DIA.	C	A	W	
T2CC050025	1/0 Sol. — 500 MCM	.325 - .813 (8.26 - 20.65)	#4 Sol. — 250 MCM	.204-.575 (5.18-14.60)	3-7/8 (98.42)	2-1/2 (63.5)	2-3/4 (69.85)	4.9 (2.2)
T2CC050050			1/0 Sol. — 500 MCM	.325-.813 (8.26-20.65)	4-1/8 (104.78)	2-3/4 (69.85)	2-3/4 (69.85)	5.3 (2.4)
T2CC080025	2/0 Sol. — 800 MCM	.365 - 1.031 (9.27 - 26.19)	#4 Sol. — 250 MCM	.204-.575 (5.18-14.60)	4-1/8 (104.78)	2-1/2 (63.5)	2-3/4 (69.85)	6.0 (2.7)
T2CC080080			2/0 Sol. — 800 MCM	.365-1.031 (9.27-26.19)	4-3/8 (111.12)	2-3/4 (69.85)	2-3/4 (69.85)	7.6 (3.4)
T2CC100025	4/0 Str. —1000 MCM	.460 - 1.152 (11.98 - 29.26)	#4 Sol. — 250 MCM	.204-.575 (5.18-14.60)	4-1/8 (104.78)	2-1/2 (63.5)	3-1/2 (88.9)	6.7 (3.1)
T2CC100100			4/0 Str. — 1000 MCM	.460-1.152 (11.68-29.26)	5-1/8 (130.18)	3-1/2 (88.9)	3-1/2 (88.9)	7.6 (3.4)

TEES BOLTED BRONZE
TWO CABLE MAIN TO TWO CABLE TAP

BRONZE
T2HC2HC

Bronze alloy tee for connecting two copper cable mains to two copper cable taps. Clamping bolts have hex-stops for one-wrench installation. All sizes furnished with reversible caps.

Material: **Castings**—bronze alloy
Hardware—stainless steel or silicon bronze

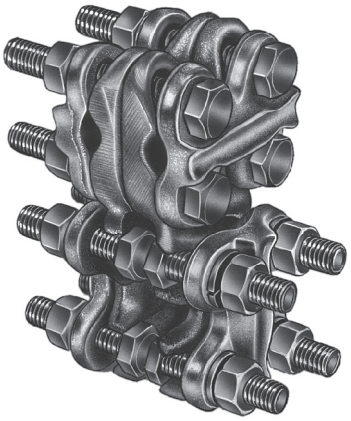

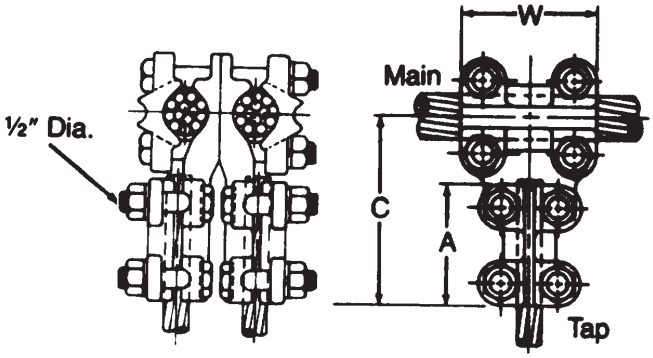

Product Data & Conductor Size

CATALOG NUMBER	COPPER CONDUCTOR RANGE				DIMENSIONS INCHES (MM)			APPROX. WT. EACH LBS. (KG)
	MAIN		TAP					
	TWO CABLE	DIA.	CABLE	DIA.	C	A	W	
T2HC2HC025025	#4 Sol. — 250 MCM	.204 - .575 (5.18 - 14.60)	#4 Sol. — 250 MCM	.204 - .575 (5.18 - 14.60)	4 (101.6)	2-1/2 (63.5)	2-1/2 (63.5)	5.9 (2.7)
T2HC2HC050050	1/0 Sol. — 500 MCM	.325 - .813 (8.26 - 20.65)	1/0 Sol. — 500 MCM	.325 - .813 (8.26 -20.65)	4-1/4 (107.95)	2-3/4 (69.85)	2-3/4 (69.85)	8.8 (4.0)
T2HC2HC080080	2/0 Sol. — 800 MCM	.365 -1.031 (9.27 -26.19)	2/0 Sol. — 800 MCM	.365 -1.031 (9.27-26.19)	5-3/4 (146.05)	4 (101.6)	4 (101.6)	12.0 (5.4)
T2HC2HC100100	4/0 Str. —1000 MCM	.460 -1.152 (11.68 -29.26)	4/0 Str. —1000 MCM	.460-1.152 (11.68-29.26)	5-1/8 (130.18)	3-1/2 (88.9)	3-1/2 (88.9)	11.6 (5.3)
T2HC2HC150080	250 — 1500 MCM	.574 -1.412 (14.58 -35.86)	2/0 Sol. — 800 MCM	.365-1.031 (9.27 - 26.19)	5-7/8 (149.22)	4 (101.6)	3-3/4 (95.25)	13.8 (6.3)
T2HC2HC150150			250 — 1500 MCM	.574-1.412 (11.68-35.86)	5-5/8 (142.88)	3-3/4 (95.25)	3-3/4 (95.25)	15.4 (7.0)

TEES BOLTED BRONZE
CABLE OR TUBING MAIN TO FLAT BAR TAP

BRONZE
SF

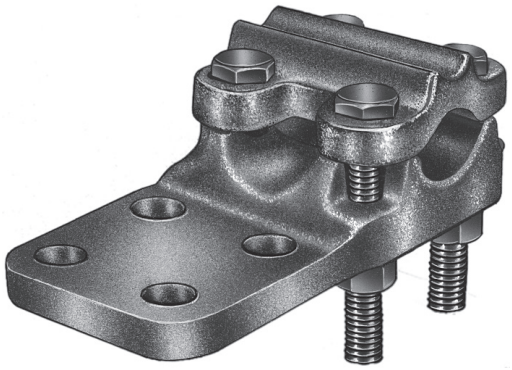

Bronze alloy tee for connecting copper cable or tubing main to copper flat bar tap. Reversible cap accommodates a wide range of conductor sizes. Conductor can enter straight or at 90 degrees to pad. Tongue holes have NEMA spacing. Clamping bolts have hex-stops for one-wrench installation.caps.

Material: **Castings**—bronze alloy
Hardware—silicon bronze or stainless steel

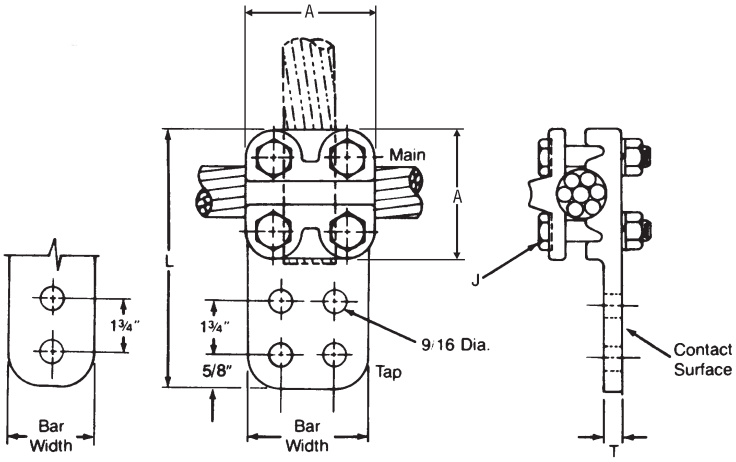

Fig. 1 Fig. 2

Product Data & Conductor Size

CATALOG NUMBER	FIG. NO.	COPPER CONDUCTOR RANGE — MAIN — CABLE	CABLE DIA. INCHES (MM)	TUBING IPS	FLAT BAR TAP WIDTH-INCHES	DIMENSIONS INCHES (MM) L	A	T	J	APPROX. WT. EACH LBS. (KG)
SF1B23	1	#2 Sol. — 800 MCM	.258-1.031 (6.55-26.19)	1/4-3/4	2	5-3/4 (146.05)	2-3/8 (60.32)	3/8 (9.52)	3/8 (9.52)	2.7 (1.2)
SF1C3	2				3	5-3/4 (146.05)	2-3/8 (60.32)	3/8 (9.52)	3/8 (9.52)	3.0 (1.4)
SF2B2	1	4/0 Str. — 1500 MCM	.522-1.412 (13.26-35.86)	1/4-1	2	6-3/4 (171.45)	3-1/4 (82.55)	1/2 (12.7)	1/2 (12.7)	5.0 (2.3)
SF2C	2				3	6-3/4 (171.45)	3-1/4 (82.55)	1/2 (12.7)	1/2 (12.7)	5.3 (2.4)
SF3B2	1	850 — 2000 MCM	1.063-1.632 (27.0-41.45)	3/4-1 1/2	2	7-1/2 (190.5)	4 (101.6)	9/16 (14.29)	1/2 (12.7)	8.7 (3.9)
SF3C	2				3	7-1/2 (190.5)	4 (101.6)	9/16 (14.29)	1/2 (12.7)	11.1 (5.0)

TEES BOLTED BRONZE TUBING MAIN TO CABLE TAP

BRONZE
TTC

Bronze alloy tee for connecting copper tubing main to copper cable tap. Clamping bolts have hex-stops for onewrench installation. All cable taps furnished with reversible cable caps.

Material: **Castings**—bronze alloy
Hardware—silicon bronze or stainless steel

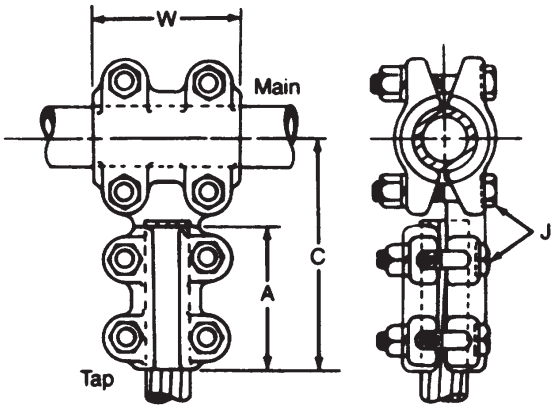

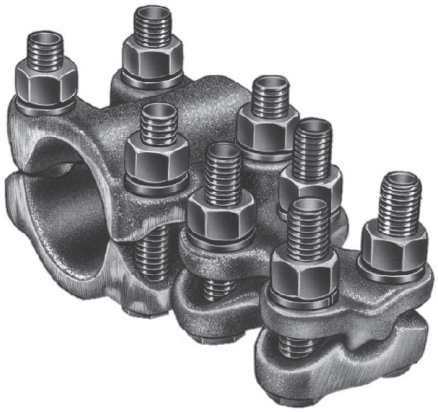

SC 17

Product Data & Conductor Size

CATALOG NUMBER	COPPER CONDUCTOR SIZE			DIMENSIONS INCHES (MM)				APPROX. WT. EACH LBS. (KG)
	TUBING MAIN IPS	CABLE TAP	CABLE DIA.	C	A	W	J	
TTC404022	1/2	#6 Sol. — 2/0 Str.	.162-.419 (4.11-10.64)	2-7/8 (73.02)	1-1/2 (38.1)	1-5/8 (41.28)	3/8 (9.52)	1.4 (.64)
TTC406022	3/4	#6 Sol. — 2/0 Str.	.162-.419 (4.11-10.64)	2-7/8 (73.02)	1-1/2 (38.1)	1-5/8 (41.28)	3/8 (9.52)	1.5 (.68)
TTC410022	1	#6 Sol. — 2/0 Str.	.162-.419 (4.11-10.64)	3-1/8 (79.38)	1-1/2 (38.1)	1-5/8 (41.28)	3/8 (9.52)	1.6 (.72)
TTC412022	1-1/4	#6 Sol. — 2/0 Str.	.162-.419 (4.11-10.64)	3-1/4 (82.55)	1-1/2 (38.1)	1-1/2 (38.1)	3/8 (9.52)	1.8 (.82)
TTC8040253	1/2	#4 Sol. — 250 MCM	.204-.575 (5.18-14.60)	4 (101.6)	2-1/2 (63.5)	2-1/2 (63.5)	3/8 (9.52)	2.2 (1.00)
TTC806025	3/4	#4 Sol. — 250 MCM	.204-.575 (5.18-14.60)	4-1/4 (107.95)	2-1/8 (53.98)	2-1/2 (63.5)	1/2 (12.7)	3.2 (1.45)
TTC8060253	3/4	#4 Sol. — 250 MCM	.204-.575 (5.18-14.60)	4-1/8 (104.78)	2-3/4 (69.85)	2-1/2 (63.5)	3/8 (9.52)	2.8 (1.27)
TTC806050	3/4	1/0 Sol. — 500 MCM	.325-.813 (8.26-20.65)	4-1/2 (114.3)	2-3/4 (69.85)	3 (76.2)	1/2 (12.7)	3.6 (1.63)
TTC8060503	3/4	1/0 Sol. — 500 MCM	.325-.813 (8.26-20.65)	4-1/8 (104.78)	2-3/4 (69.85)	2-1/2 (63.5)	3/8 (9.52)	3.2 (1.45)
TTC810025	1	#4 Sol. — 250 MCM	.204-.575 (5.18-14.60)	4-1/4 (107.95)	2-1/2 (63.5)	2-1/2 (63.5)	1/2 (12.7)	3.0 (1.46)
TTC8100253	1	#4 Sol. — 250 MCM	.204-.575 (5.18-14.60)	4-3/8 (111.12)	2-3/4 (69.85)	2-1/2 (63.5)	3/8 (9.52)	2.6 (1.18)
TTC810050	1	1/0 Sol. — 500 MCM	.325-.813 (8.26-20.65)	4-5/8 (117.48)	2-3/4 (69.85)	2-3/4 (69.85)	1/2 (12.7)	3.8 (1.72)
TTC810080	1	2/0 Sol. — 800 MCM	.365-1.031 (9.27-26.19)	4-1/2 (114.3)	2-3/4 (69.85)	3-3/4 (95.25)	1/2 (12.7)	4.3 (1.95)
TTC810100	1	4/0 Str. — 1000 MCM	.460-1.152 (11.60-29.26)	5-1/4 (133.35)	3-1/2 (88.9)	3-3/4 (95.25)	1/2 (12.7)	6.2 (2.81)

Continued on next page.

TEES BOLTED BRONZE
TUBING MAIN TO CABLE TAP – (CONTINUED)

Product Data & Conductor Size

CATALOG NUMBER	COPPER CONDUCTOR SIZE			DIMENSIONS INCHES (MM)				APPROX. WT. EACH LBS. (KG)
	TUBING MAIN IPS	CABLE TAP	CABLE DIA.	C	A	W	J	
TTC812025	1-1/4	#4 Sol. — 250 MCM	.204 -.575 (5.18 -14.60)	4-3/8 (111.12)	2-1/2 (63.5)	2-1/4 (57.15)	1/2 (12.7)	3.6 (1.63)
TTC8120253	1-1/4	#4 Sol. — 250 MCM	.204 -.575 (5.18 -14.60)	4-3/8 (111.12)	2-1/2 (63.5)	2-1/4 (57.15)	3/8 (9.52)	3.0 (1.36)
TTC812050	1-1/4	1/0 Sol. — 500 MCM	.325 -.813 (8.26 -20.65)	4-3/4 (120.65)	2-3/4 (69.85)	3-3/4 (95.25)	1/2 (12.7)	4.0 (1.81)
TTC812080	1-1/4	2/0 Sol. — 800 MCM	.365 - 1.031 (9.27 - 26.19)	4-5/8 (117.48)	2-3/4 (69.85)	3-3/4 (95.25)	1/2 (12.7)	4.5 (2.04)
TTC812100	1-1/4	4/0 Str. — 1000 MCM	.460 - 1.152 (11.68 - 29.26)	5-5/8 (142.88)	3-1/2 (88.9)	3-3/4 (95.25)	1/2 (12.7)	4.8 (2.18)
TTC814025	1-1/2	#4 Sol. — 250 MCM	.204-.575 (5.18-14.60)	4-5/8 (117.48)	2-1/2 (63.5)	2-3/4 (69.85)	1/2 (12.7)	5.7 (2.58)
TTC814050	1-1/2	1/0 Sol. — 500 MCM	.325 - .813 (8.26 - 20.65)	4-3/4 (120.65)	2-3/4 (69.85)	2-3/4 (69.85)	1/2 (12.7)	5.9 (2.68)
TTC814080	1-1/2	2/0 Sol. — 800 MCM	.365 - 1.031 (9.27 - 26.19)	4-7/8 (123.82)	2-3/4 (69.85)	3-1/4 (82.55)	1/2 (12.7)	5.4 (2.45)
TTC814100	1-1/2	4/0 Str. — 1000 MCM	.460 - 1.152 (11.68 - 29.26)	5-5/8 (142.88)	3-1/2 (88.9)	3-1/4 (82.55)	1/2 (12.7)	7.6 (3.45)
TTC820025	2	#4 Sol. — 250 MCM	.204 -.575 (5.18-14.60)	4-7/8 (123.82)	2-1/2 (63.5)	2-1/2 (63.5)	1/2 (12.7)	4.8 (2.18)
TTC820050	2	1/0 Sol. —500 MCM	.325 - .813 (8.26-20.65)	5-1/8 (130.18)	2-3/4 (69.85)	2-1/4 (57.15)	1/2 (12.7)	5.4 (2.45)
TTC820080	2	2/0 Sol. — 800 MCM	.365 - 1.031 (9.27-26.19)	5-1/8 (130.18)	2-3/4 (69.85)	2-3/4 (69.85)	1/2 (12.7)	5.7 (2.58)
TTC820100	2	4/0 Str. — 1000 MCM	.460 - 1.152 (11.60-29.26)	5-7/8 (149.22)	3-1/2 (88.9)	3-1/4 (82.55)	1/2 (12.7)	8.6 (3.90)
TTC820150	2	250 — 1500 MCM	.574 - 1.412 (14.58 - 35.86)	6-1/8 (155.58)	3-3/4 (95.25)	3-1/4 (82.55)	1/2 (12.7)	8.8 (3.99)
TTC824025	2-1/2	#4 Sol. — 250 MCM	.204 - .575 (5.18 - 14.60)	5 (127.0)	2-1/2 (63.5)	2-1/2 (63.5)	1/2 (12.7)	6.0 (2.72)
TTC824050	2-1/2	1/0 Sol. — 500 MCM	.325 - .813 (8.26 - 20.65)	5-3/8 (136.52)	2-3/4 (69.85)	2-1/2 (63.5)	1/2 (12.7)	7.3 (3.31)
TTC824080	2-1/2	2/0 Sol. —800 MCM	.365 - 1.031 (9.27 - 26.19)	5-1/4 (133.35)	2-3/4 (69.85)	3-1/4 (82.55)	1/2 (12.7)	7.4 (3.36)
TTC824100	2-1/2	4/0 Str. — 1000 MCM	.460 - 1.152 (11.68 - 29.26)	6 (152.4)	3-1/2 (88.9)	2-1/4 (57.15)	1/2 (12.7)	9.2 (4.17)
TTC824150	2-1/2	250 — 1500 MCM	.574 - 1.412 (14.58 - 35.86)	6-1/4 (158.75)	3-3/4 (95.25)	3-1/4 (82.55)	1/2 (12.7)	9.4 (4.26)
TTC830025	3	#4 Sol. — 250 MCM	.204 - .575 (5.18 - 14.60)	5-1/4 (133.35)	2-1/2 (63.5)	2-1/4 (57.15)	1/2 (12.7)	6.8 (3.08)
TTC830050	3	1/0 Sol. — 500 MCM	.325 - .813 (8.26 - 20.65)	5-5/8 (142.88)	2-3/4 (69.85)	2-1/2 (63.5)	1/2 (12.7)	7.2 (3.26)
TTC830080	3	2/0 Sol. — 800 MCM	.365 - 1.031 (9.27 - 26.19)	5-5/8 (142.88)	2-7/8 (73.02)	3-1/2 (88.9)	1/2 (12.7)	7.8 (3.54)
TTC830100	3	4/0 Str. — 1000 MCM	.460 - 1.152 (11.68 - 29.26)	6-3/8 (161.92)	3-1/2 (88.9)	3-1/2 (88.9)	1/2 (12.7)	10.5 (4.76)
TTC830150	3	250 — 1500 MCM	.574 - 1.412 (14.58 - 35.86)	6-5/8 (168.28)	3-3/4 (95.25)	3-1/2 (88.9)	1/2 (12.7)	10.7 (4.85)
TTC840025	4	#4 Sol. — 250 MCM	.204 - .575 (5.18 - 16.60)	6 (152.4)	2-1/2 (63.5)	2-1/2 (63.5)	1/2 (12.7)	7.8 (3.54)
TTC840050	4	1/0 Sol. — 500 MCM	.325 - .813 (8.26 - 20.65)	6-1/8 (155.58)	2-3/4 (69.85)	2-1/2 (63.5)	1/2 (12.7)	8.8 (3.99)
TTC840080	4	2/0 Sol. — 800 MCM	.365 - 1.031 (9.27 - 26.19)	6-1/4 (158.75)	2-3/4 (69.85)	2-1/2 (63.5)	1/2 (12.7)	9.5 (4.31)
TTC840100	4	4/0 Str. — 1000 MCM	.460 - 1.152 (11.68 - 29.26)	6-7/8 (174.62)	3-1/2 (88.9)	2-1/2 (63.5)	1/2 (12.7)	12.8 (5.81)
TTC840150	4	250 — 1500 MCM	.574 - 1.412 (14.58 - 35.86)	7-1/4 (184.15)	3-3/4 (95.25)	2-1/2 (63.5)	1/2 (12.7)	13.0 (5.90)

TEES BOLTED BRONZE
TUBING MAIN TO TWO CABLE TAP

BRONZE
TT2C

Bronze alloy tee for connecting copper tubing main to two copper cable taps. Clamping bolts have hex-stops for onewrench installation. All cable taps furnished with reversible cable caps.

Material: **Castings**—bronze alloy
Hardware—silicon bronze or stainless steel

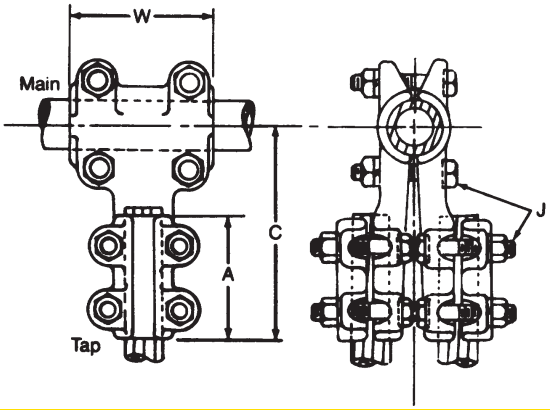

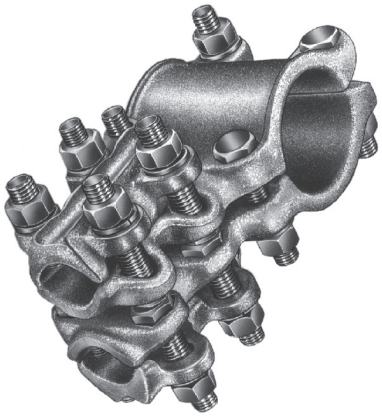

SC 19

Product Data & Conductor Size

CATALOG NUMBER	COPPER CONDUCTOR RANGE			DIMENSIONS INCHES (MM)				APPROX. WT. EACH LBS. (KG)
	TUBING MAIN IPS	CABLE TAP	CABLE DIA.	C	A	W	J	
TT2C060253	3/4	#4 Sol. — 250 MCM	.204-.575 (5.18 - 14.60)	4 (101.6)	2-1/2 (63.5)	2-1/2 (63.5)	3/8 (9.52)	4.0 (1.8)
TT2C100253	1	#4 Sol. — 250 MCM	.204-.575 (5.18 - 14.60)	4-1/8 (104.78)	2-1/2 (63.5)	2-1/2 (63.5)	3/8 (9.52)	4.4 (2.0)
TT2C100503	1	1/0 Sol. — 500 MCM	.325-.813 (8.26-20.65)	4-3/8 (111.12)	2-3/4 (69.85)	2-1/2 (63.5)	3/8 (9.52)	5.0 (2.3)
TT2C10100	1	4/0 Str. — 1000 MCM	.460-1.152 (11.68-29.26)	5-3/8 (136.52)	3-1/2 (88.9)	2-1/2 (63.5)	1/2 (12.7)	5.9 (2.7)
TT2C120253	1-1/4	#4 Sol. — 250 MCM	.204-.575 (5.18-14.60)	4-3/8 (111.12)	2-1/2 (63.5)	2-1/4 (57.15)	3/8 (9.52)	4.4 (2.0)
TT2C12050	1-1/4	1/0 Sol. — 500 MCM	.325-.813 (8.26-20.65)	4-5/8 (117.48)	2-3/4 (69.85)	2-3/4 (69.85)	1/2 (12.7)	5.9 (2.7)
TT2C120503	1-1/4	1/0 Sol. — 500 MCM	.325-.813 (8.26-20.65)	4-1/2 (114.3)	2-3/4 (69.85)	2-1/4 (57.15)	3/8 (9.52)	5.5 (2.5)
TT2C12080	1-1/4	2/0 Sol. — 800 MCM	.365-1.031 (9.27-26.19)	4-5/8 (117.48)	2-3/4 (69.85)	2-3/4 (69.85)	1/2 (12.7)	9.1 (4.1)
TT2C12100	1-1/4	4/0 Str. — 1000 MCM	.460-1.152 (11.68-29.26)	5-1/2 (139.7)	3-1/2 (88.9)	2-3/4 (69.85)	1/2 (12.7)	10.0 (4.5)
TT2C140253	1-1/2	#4 Sol. — 250 MCM	.204-.575 (5.18-14.60)	4-1/4 (107.95)	2-3/4 (69.85)	2-3/4 (69.85)	3/8 (9.52)	7.8 (3.5)
TT2C14050	1-1/2	1/0 Sol. — 500 MCM	.325-.813 (8.26-20.65)	4-3/4 (120.65)	2-3/4 (69.85)	2-3/4 (69.85)	1/2 (12.7)	8.3 (3.8)
TT2C14080	1-1/2	2/0 Sol. — 800 MCM	.365-1.031 (9.27-26.19)	4-3/4 (120.65)	2-3/4 (69.85)	2-3/4 (69.85)	1/2 (12.7)	9.6 (4.4)
TT2C14100	1-1/2	4/0 Str. — 1000 MCM	.460-1.152 (11.68-29.26)	5-1/8 (130.18)	3-1/2 (88.9)	2-3/4 (69.85)	1/2 (12.7)	10.2 (4.6)

Continued on next page.

TEES BOLTED BRONZE TUBING MAIN TO TWO CABLE TAP (CONTINUED)

Product Data & Conductor Size

CATALOG NUMBER	COPPER CONDUCTOR RANGE			DIMENSIONS INCHES (MM)				APPROX. WT. EACH LBS. (KG)
	TUBING MAIN IPS	CABLE TAP	CABLE DIA.	C	A	W	J	
TT2C200253	2	#4 Sol. — 250 MCM	.204-.575 (5.18 - 14.60)	4-5/8 (117.48)	2-1/2 (63.5)	2-3/4 (69.85)	3/8 (9.52)	5.0 (2.3)
TT2C20050	2	1/0 Sol. — 500 MCM	.325-.813 (8.26-20.65)	5-1/4 (133.35)	2-3/4 (69.85)	2-1/4 (57.15)	1/2 (12.7)	7.9 (3.6)
TT2C20080	2	2/0 Sol.—800 MCM	.365-1.031 (9.27-26.19)	5-1/8 (130.18)	2-3/4 (69.85)	3-1/4 (82.55)	1/2 (12.7)	10.3 (4.7)
TT2C20100	2	4/0 Str. — 1000 MCM	.460-1.152 (11.68-29.26)	5-3/4 (146.05)	3-1/2 (88.9)	3-1/2 (88.9)	1/2 (12.7)	10.8 (4.9)
TT2C24050	2-1/2	1/0 Sol. — 500 MCM	.325-.813 (8.26-20.65)	5-3/8 (136.52)	2-3/4 (69.85)	2-1/4 (57.15)	1/2 (12.7)	9.0 (4.1)
TT2C24080	2-1/2	2/0 Sol. — 800 MCM	.365-1.031 (9.27-26.19)	5-1/4 (133.35)	2-3/4 (69.85)	3-1/4 (82.55)	1/2 (12.7)	9.7 (4.4)
TT2C24100	2-1/2	4/0 Str. — 1000 MCM	.460-1.152 (11.68-29.26)	6 (152.4)	3-1/2 (88.9)	2-1/4 (57.15)	1/2 (12.7)	10.3 (4.7)
TT2C24150	2-1/2	250—1500 MCM	.574-1.412 (14.58-35.86)	6-1/4 (158.75)	3-3/4 (95.25)	3-1/4 (82.55)	1/2 (12.7)	15.7 (7.1)
TT2C30050	3	1/0 Sol. — 500 MCM	.325-.813 (8.26-20.65)	5-1/2 (139.7)	2-3/4 (69.85)	2-1/4 (57.15)	1/2 (12.7)	11.0 (5.0)
TT2C30080	3	2/0 Sol. — 800 MCM	.365-1.031 (9.27-26.19)	5-1/2 (139.7)	2-3/4 (69.85)	2-1/4 (57.15)	1/2 (12.7)	9.8 (4.4)
TT2C30100	3	4/0 Str. — 1000 MCM	.460-1.152 (11.68-29.26)	6-3/8 (161.92)	3-1/2 (88.9)	2-1/2 (63.5)	1/2 (12.7)	11.4 (5.2)
TT2C30150	3	250—1500 MCM	.574-1.412 (14.58-35.86)	6-5/8 (168.28)	3-3/4 (95.25)	3-1/2 (88.9)	1/2 (12.7)	12.2 (5.5)
TT2C40050	4	1/0 Sol. — 500 MCM	.325-.813 (8.26-20.65)	6-1/8 (158.75)	2-3/4 (69.85)	2-1/2 (63.5)	1/2 (12.7)	11.8 (5.4)
TT2C40100	4	4/0 Str. — 1000 MCM	.460-1.152 (11.68-29.26)	7 (177.8)	3-1/2 (88.9)	2-1/2 (63.5)	1/2 (12.7)	13.2 (6.0)

TEES BOLTED BRONZE
TUBING MAIN TO TUBING TAP

BRONZE
TTH

Bronze alloy heavy duty tee for connecting copper tubing main to copper tubing tap. Clamping bolts have hex-stops for one-wrench installation.

Material: **Castings**—bronze alloy
Hardware—silicon bronze or stainless steel

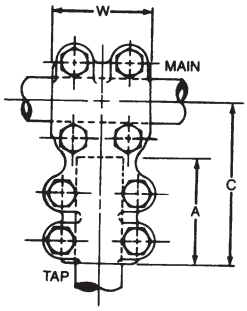

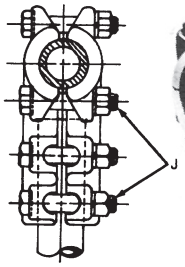

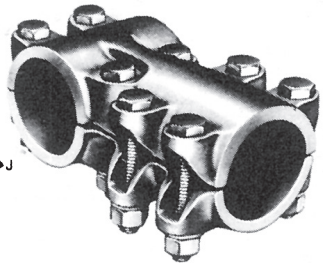

Product Data & Conductor Size

CATALOG NUMBER	COPPER CONDUCTOR RANGE		DIMENSIONS INCHES (MM)				APPROX. WT. EACH LBS. (KG)
	TUBING MAIN IPS	TUBING TAP IPS	C	A	W	J	
TTH04043	1/2	1/2	3-5/8 (92.08)	2-1/4 (57.15)	2-1/4 (57.15)	3/8 (9.52)	2.3 (1.04)
TTH06043	3/4	1/2	3-3/4 (95.25)	2-1/4 (57.15)	2-1/4 (57.15)	3/8 (9.52)	2.5 (1.13)
TTH0606	3/4	3/4	4-1/8 (104.78)	2-1/2 (63.5)	2-1/2 (63.5)	1/2 (12.7)	3.4 (1.54)
TTH1004	1	1/2	4-1/4 (107.95)	2-1/2 (63.5)	2-1/2 (63.5)	1/2 (12.7)	2.7 (1.22)
TTH1006	1	3/4	4-1/4 (107.95)	2-1/2 (63.5)	2-1/2 (63.5)	1/2 (12.7)	3.8 (1.72)
TTH1010	1	1	4-1/2 (114.3)	2-1/2 (63.5)	2-1/2 (63.5)	1/2 (12.7)	3.9 (1.77)
TTH1204	1-1/4	1/2	4-1/2 (114.3)	2-1/2 (63.5)	2-3/4 (69.85)	1/2 (12.7)	3.6 (1.63)
TTH1206	1-1/4	3/4	4-5/8 (117.48)	2-1/2 (63.5)	2-1/2 (63.5)	1/2 (12.7)	4.1 (1.86)
TTH1210	1-1/4	1	4-1/2 (114.3)	2-1/2 (63.5)	2-1/2 (63.5)	1/2 (12.7)	4.6 (2.09)
TTH1212	1-1/4	1-1/4	4-1/2 (114.3)	2-3/4 (69.85)	2-3/4 (69.85)	1/2 (12.7)	6.6 (2.98)
TTH1404	1-1/2	1/2	4-5/8 (117.48)	2-1/2 (63.5)	2-3/4 (69.85)	1/2 (12.7)	4.0 (1.81)
TTH1406	1-1/2	3/4	4-3/8 (111.12)	2-3/8 (60.32)	2-3/8 (60.32)	1/2 (12.7)	4.2 (1.90)
TTH1410	1-1/2	1	4-3/4 (120.65)	2-1/2 (63.5)	3-1/2 (88.9)	1/2 (12.7)	4.9 (2.22)
TTH1412	1-1/2	1-1/4	4-5/8 (117.48)	2-3/4 (69.85)	2-3/4 (69.85)	1/2 (12.7)	7.0 (3.18)
TTH1414	1-1/2	1-1/2	4-3/4 (120.65)	2-3/4 (69.85)	3-1/4 (82.55)	1/2 (12.7)	8.0 (3.63)
TTH2004	2	1/2	4-7/8 (123.82)	2-1/2 (63.5)	2-3/4 (69.85)	1/2 (12.7)	3.9 (1.77)
TTH2006	2	3/4	4-7/8 (123.82)	2-1/2 (63.5)	2-3/4 (69.85)	1/2 (12.7)	4.7 (2.13)
TTH2010	2	1	4-7/8 (123.82)	2-1/2 (63.5)	2-1/2 (63.5)	1/2 (12.7)	5.5 (2.49)
TTH2012	2	1-1/4	5-1/8 (130.18)	2-3/4 (69.85)	2-3/4 (69.85)	1/2 (12.7)	7.5 (3.40)
TTH2014	2	1-1/2	5 (127.0)	2-1/2 (63.5)	2-1/2 (63.5)	1/2 (12.7)	8.7 (3.95)
TTH2020	2	2	5-1/2 (139.7)	3-1/4 (82.55)	3-1/4 (82.55)	1/2 (12.7)	13.0 (5.90)
TTH2024	2	2-1/2	6 (152.4)	3-1/4 (82.55)	3-1/4 (82.55)	1/2 (12.7)	16.6 (7.53)

Continued on next page.

TEES BOLTED BRONZE TUBING MAIN TO TUBING TAP (CONTINUED)

Product Data & Conductor Size

CATALOG NUMBER	COPPER CONDUCTOR RANGE		DIMENSIONS INCHES (MM)				APPROX. WT. EACH LBS. (KG)
	TUBING MAIN IPS	TUBING TAP IPS	C	A	W	J	
TTH2406	2-1/2	3/4	5-1/8 (130.18)	2-1/2 (63.5)	3-1/4 (82.55)	1/2 (12.7)	5.3 (2.40)
TTH2410	2-1/2	1	5-1/4 (133.35)	2-1/2 (63.5)	3-1/4 (82.55)	1/2 (12.7)	5.9 (2.68)
TTH2412	2-1/2	1-1/4	5-1/4 (133.35)	2-3/4 (69.85)	3-1/4 (82.55)	1/2 (12.7)	8.2 (3.72)
TTH2414	2-1/2	1-1/2	5-7/8 (149.22)	2-3/4 (69.85)	2-1/2 (63.5)	1/2 (12.7)	9.3 (4.22)
TTH2420	2-1/2	2	5-3/4 (146.05)	3-1/4 (82.55)	3-1/4 (82.55)	1/2 (12.7)	14.0 (6.35)
TTH2424	2-1/2	2-1/2	6 (152.4)	3-1/4 (82.55)	3-1/4 (82.55)	1/2 (12.7)	17.0 (7.71)
TTH3006	3	3/4	5-3/4 (146.05)	2-7/8 (73.02)	2-1/2 (63.5)	1/2 (12.7)	5.8 (2.63)
TTH3010	3	1	5-1/2 (139.7)	2-1/2 (63.5)	3-1/2 (88.9)	1/2 (12.7)	6.8 (3.08)
TTH3012	3	1-1/4	5-3/4 (146.05)	2-3/4 (69.85)	3-1/2 (88.9)	1/2 (12.7)	8.9 (4.04)
TTH3014	3	1-1/2	5-3/4 (146.05)	2-3/4 (69.85)	3-1/2 (88.9)	1/2 (12.7)	10.0 (4.54)
TTH3020	3	2	6-1/8 (155.58)	3-1/4 (82.55)	3-1/2 (88.9)	1/2 (12.7)	14.0 (6.35)
TTH3024	3	2-1/2	6-1/8 (155.58)	3-1/4 (82.55)	3-1/2 (88.9)	1/2 (12.7)	18.0 (8.16)
TTH3030	3	3	7 (177.8)	3-1/2 (88.9)	3-1/2 (88.9)	5/8 (15.88)	26.0 (11.79)
TTH3406	3-1/2	3/4	5-3/4 (146.05)	2-1/2 (63.5)	2-1/2 (63.5)	1/2 (12.7)	6.4 (2.90)
TTH3412	3-1/2	1-1/4	6 (152.4)	2-3/4 (69.85)	2-1/2 (63.5)	1/2 (12.7)	9.8 (4.4)
TTH3424	3-1/2	2-1/2	6-1/2 (165.1)	3-1/4 (82.55)	3-1/2 (88.9)	1/2 (12.7)	19.0 (8.62)
TTH3434	3-1/2	3-1/2	7 (177.8)	3-1/2 (88.9)	3-1/2 (88.9)	5/8 (15.88)	32.0 (14.52)
TTH4006	4	3/4	5-3/4 (146.05)	2-1/2 (63.5)	2-1/2 (63.5)	1/2 (12.7)	7.0 (3.18)
TTH4020	4	2	7 (177.8)	3-1/4 (82.55)	4 (101.6)	1/2 (12.7)	16.0 (7.26)
TTH4024	4	2-1/2	6-3/4 (171.45)	3-1/4 (82.55)	4 (101.6)	1/2 (12.7)	20.0 (9.07)
TTH4030	4	3	7-1/4 (184.15)	3-1/2 (88.9)	4 (101.6)	5/8 (15.88)	28.0 (12.70)
TTH4040	4	4	8-1/4 (209.55)	4 (101.6)	4 (101.6)	5/8 (15.88)	39.0 (17.69)

TEES BOLTED BRONZE ANGLED TUBING MAIN TO TUBING TAP

BRONZE
TT15

Bronze alloy tee for connecting copper tubing main to copper tubing tap at 15 degrees. Clamping bolts have hexstops for one-wrench installation.

Material: **Castings**—bronze alloy
Hardware—silicon bronze or stainless steel

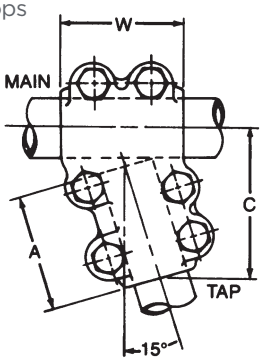

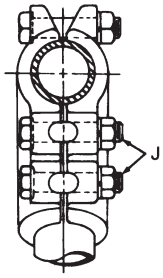

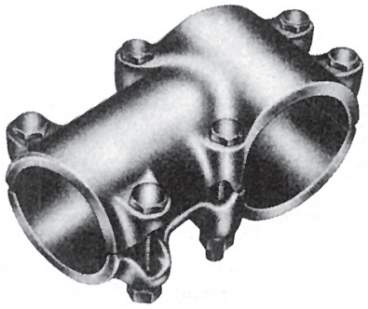

Product Data & Conductor Size

CATALOG NUMBER	COPPER CONDUCTOR RANGE		DIMENSIONS INCHES (MM)				APPROX. WT. EACH LBS. (KG)
	TUBING MAIN IPS	TUBING TAP IPS	C	A	W	J	
TT150606	3/4	3/4	3-1/2 (88.9)	2-3/8 (60.32)	2-1/2 (63.5)	1/2 (12.7)	3.7 (1.68)
TT151006	1	3/4	4 (101.6)	2-1/2 (63.5)	2-1/2 (63.5)	1/2 (12.7)	3.9 (1.77)
TT151010	1	1	4-1/8 (104.78)	2-1/2 (63.5)	2-1/2 (63.5)	1/2 (12.7)	4.3 (1.95)
TT151206	1-1/4	3/4	3-7/8 (98.42)	3-3/8 (85.72)	2-1/2 (63.5)	1/2 (12.7)	4.5 (2.04)
TT151210	1-1/4	1	4-1/8 (104.78)	2-1/2 (63.5)	2-3/4 (69.85)	1/2 (12.7)	4.9 (2.22)
TT151212	1-1/4	1-1/4	4-3/8 (111.12)	2-5/8 (66.68)	2-3/4 (69.85)	1/2 (12.7)	5.4 (2.45)
TT151406	1-1/2	3/4	4-1/8 (104.78)	2-1/2 (63.5)	2-3/4 (69.85)	1/2 (12.7)	5.2 (2.36)
TT151410	1-1/2	1	4-1/4 (107.95)	2-1/2 (63.5)	2-3/4 (69.85)	1/2 (12.7)	6.1 (2.77)
TT151412	1-1/2	1-1/4	4-5/8 (117.48)	2-3/8 (60.32)	2-3/4 (69.85)	1/2 (12.7)	6.7 (3.04)
TT151414	1-1/2	1-1/2	4-5/8 (117.48)	2-3/4 (69.85)	2-3/4 (69.85)	1/2 (12.7)	7.4 (3.36)
TT152010	2	1	4-1/2 (114.3)	2-1/2 (63.5)	2-3/4 (69.85)	1/2 (12.7)	7.1 (3.22)
TT152012	2	1-1/4	5 (127.0)	2-3/4 (69.85)	2-3/4 (69.85)	1/2 (12.7)	8.5 (3.86)
TT152014	2	1-1/2	4-7/8 (123.82)	2-3/4 (69.85)	2-3/4 (69.85)	1/2 (12.7)	9.1 (4.13)
TT152020	2	2	5-3/8 (136.52)	3-1/4 (82.55)	3-1/4 (82.55)	1/2 (12.7)	9.8 (4.44)
TT152412	2-1/2	1-1/4	5 (127.0)	2-5/8 (66.68)	2-3/4 (69.85)	1/2 (12.7)	9.7 (4.40)
TT152414	2-1/2	1-1/2	5-3/8 (136.52)	2-3/4 (69.85)	3-1/4 (82.55)	1/2 (12.7)	10.8 (4.90)
TT152420	2-1/2	2	5-5/8 (142.88)	3-1/4 (82.55)	3-1/4 (82.55)	1/2 (12.7)	12.3 (5.58)

Continued on next page.

TEES BOLTED BRONZE ANGLED TUBING MAIN TO TUBING TAP (CONTINUED)

Product Data & Conductor Size

CATALOG NUMBER	COPPER CONDUCTOR RANGE		DIMENSIONS INCHES (MM)				APPROX. WT. EACH LBS. (KG)
	TUBING MAIN IPS	TUBING TAP IPS	C	A	W	J	
TT153012	3	1-1/4	5-1/4 (133.35)	2-5/8 (66.68)	3 (76.2)	1/2 (12.7)	13.1 (5.94)
TT153014	3	1-1/2	5-5/8 (142.88)	2-7/8 (73.02)	3 (76.2)	1/2 (12.7)	14.3 (6.49)
TT153020	3	2	6 (152.4)	3-1/8 (79.38)	3 (76.2)	1/2 (12.7)	16.2 (7.35)
TT153030	3	3	7 (177.8)	3-1/2 (88.9)	3-1/2 (88.9)	5/8 (15.88)	19.1 (8.66)
TT153412	3-1/2	1-1/4	5-3/4 (146.05)	2-3/4 (69.85)	2-1/2 (63.5)	1/2 (12.7)	18.6 (8.44)
TT153414	3-1/2	1-1/2	6-1/8 (155.58)	3 (76.2)	3 (76.2)	1/2 (12.7)	19.7 (8.94)
TT153420	3-1/2	2	6-3/8 (161.92)	3-1/4 (82.55)	3-1/2 (88.9)	1/2 (12.7)	20.4 (9.25)

TEES BOLTED BRONZE ANGLED TUBING MAIN TO TWO TUBING TAP

BRONZE
TT215

Bronze alloy angle tee for connecting copper tubing main to two copper tubing taps at 15 degrees from perpendicular. Clamping bolts have hex-stops for one-wrench installation.

Material: **Castings**—bronze alloy
Hardware—silicon bronze or stainless steel

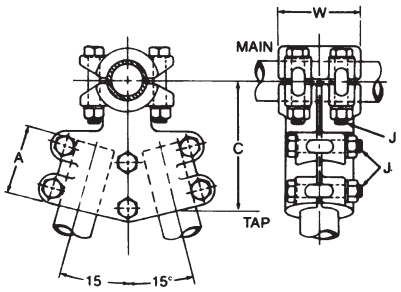

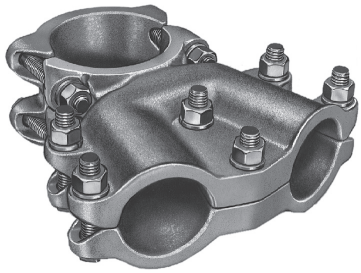

Product Data & Conductor Size

CATALOG NUMBER	COPPER CONDUCTOR RANGE		DIMENSIONS INCHES (MM)				APPROX. WT. EACH LBS. (KG)
	TUBING MAIN IPS	TUBING TAP IPS	C	A	W	J	
TT2150606	3/4	3/4	4-3/4 (120.65)	2-1/8 (53.98)	5-3/8 (136.52)	1/2 (12.7)	4.2 (1.90)
TT2151006	1	3/4	5 (127.0)	2-1/8 (53.98)	5-3/8 (136.52)	1/2 (12.7)	5.6 (2.54)
TT2151010	1	1	5-1/2 (139.7)	2-1/2 (63.5)	5-7/8 (149.22)	1/2 (12.7)	7.4 (3.36)
TT2151206	1-1/4	3/4	5-1/2 (139.7)	2-1/2 (63.5)	5-7/8 (149.22)	1/2 (12.7)	6.1 (2.77)
TT2151210	1-1/4	1	5-1/2 (139.7)	2-1/2 (63.5)	5-7/8 (149.22)	1/2 (12.7)	9.4 (4.26)
TT2151406	1-1/2	3/4	5-1/2 (139.7)	2-1/8 (53.98)	5-5/8 (142.88)	1/2 (12.7)	8.2 (3.72)
TT2151410	1-1/2	1	5-1/2 (139.7)	2-1/2 (63.5)	5-7/8 (149.22)	1/2 (12.7)	10.5 (4.76)
TT2151412	1-1/2	1-1/4	5-3/4 (146.05)	2-3/4 (69.85)	6-7/8 (174.62)	1/2 (12.7)	14.8 (6.71)
TT2152010	2	1	5-1/2 (139.7)	2-1/2 (63.5)	5-7/8 (149.22)	1/2 (12.7)	12.3 (5.58)
TT2152012	2	1-1/4	5-7/8 (149.22)	2-3/4 (69.85)	6-7/8 (174.62)	1/2 (12.7)	15.8 (7.17)
TT2152014	2	1-1/2	6-1/8 (155.58)	3 (76.2)	6-7/8 (174.62)	1/2 (12.7)	18.7 (8.48)
TT2152412	2-1/2	1-1/4	6-3/8 (161.92)	2-3/4 (69.85)	6-3/4 (171.45)	1/2 (12.7)	17.4 (7.89)
TT2152414	2-1/2	1-1/2	6-3/8 (161.92)	2-3/4 (69.85)	7-1/4 (184.15)	1/2 (12.7)	19.2 (8.71)
TT2152420	2-1/2	2	6-1/2 (165.1)	2-7/8 (73.02)	8-3/4 (222.25)	1/2 (12.7)	20.8 (9.43)
TT2153012	3	1-1/4	6-3/8 (161.92)	2-3/4 (69.85)	6-7/8 (174.6)	1/2 (12.7)	19.5 (8.84)
TT2153014	3	1-1/2	6-5/8 (168.28)	3 (76.2)	7 (177.8)	1/2 (12.7)	20.8 (9.43)
TT2153020	3	2	7 (177.8)	3-1/4 (82.55)	8-3/4 (222.25)	1/2 (12.7)	22.2 (10.07)
TT2153414	3-1/2	1-1/2	6-5/8 (168.28)	2-3/4 (69.85)	7-1/2 (190.5)	1/2 (12.7)	23.7 (10.75)
TT2153420	3-1/2	2	7-1/8 (180.98)	2-3/4 (69.85)	8-1/2 (215.9)	1/2 (12.7)	24.3 (11.02)

TEES BOLTED BRONZE
TUBING MAIN TO FLAT BAR TAP

BRONZE
TTF

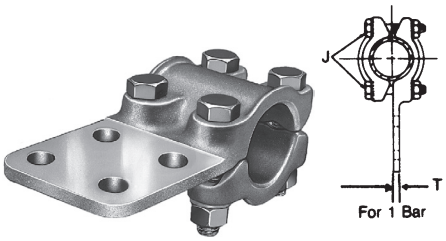

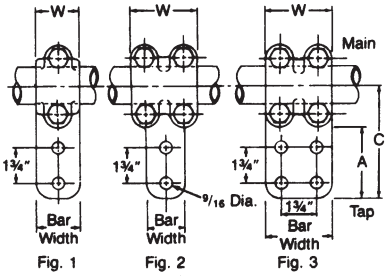

Bronze alloy, tube to flat tee, for connecting copper tubing main to copper flat. Pads have contact surface on one side. NEMA hole spacing is standard.

Material: **Castings**—bronze alloy
Clamping Hardware—silicon bronze or stainless steel

Product Data & Conductor Size

CATALOG NUMBER	FIG. NO.	COPPER CONDUCTOR SIZE		DIMENSIONS INCHES (MM)					APPROX. WT. EACH LBS. (KG)
		TUBING MAIN IPS	FLAT BAR TAP WIDTH - INCHES	C	A	W	T	J	
TTF04201	1	1/2	2	4-3/8 (111.12)	3-1/4 (82.55)	2 (50.8)	1/4 (6.35)	3/8 (9.52)	3.2 (1.45)
TTF04301	3	1/2	3	4-7/8 (123.82)	3-1/4 (82.55)	2-1/2 (63.5)	1/4 (6.35)	1/2 (12.7)	3.7 (1.68)
TTF06201	2	3/4	2	4-5/8 (117.48)	3 (76.2)	2-1/2 (63.5)	3/8 (9.52)	1/2 (12.7)	3.4 (1.54)
TTF06301	3	3/4	3	4-7/8 (123.82)	3-1/4 (82.55)	2-1/2 (63.5)	3/8 (9.52)	1/2 (12.7)	3.9 (1.77)
TTF10201	1	1	2	4-3/4 (120.65)	3-1/8 (79.38)	2-5/8 (66.68)	3/8 (9.52)	1/2 (12.7)	3.6 (1.63)
TTF10301	3	1	3	4-7/8 (123.82)	3 (76.2)	3-3/4 (95.25)	3/8 (9.52)	1/2 (12.7)	4.0 (1.81)
TTF12201	2	1-1/4	2	5-1/8 (130.18)	3-1/4 (82.55)	2-1/4 (57.15)	3/8 (9.52)	1/2 (12.7)	3.9 (1.77)
TTF12301	3	1-1/4	3	5-1/4 (133.35)	3-1/4 (82.55)	2-1/2 (63.5)	3/8 (9.52)	1/2 (12.7)	4.2 (1.90)
TTF12401	3	1-1/4	4	6-5/16 (160.34)	4-1/4 (107.95)	3-1/4 (82.55)	3/8 (9.52)	1/2 (12.7)	4.7 (2.13)
TTF14201	1	1-1/2	2	5-1/2 (139.7)	3-1/4 (82.55)	1-3/4 (44.45)	3/8 (9.52)	1/2 (12.7)	4.1 (1.86)
TTF14301	3	1-1/2	3	5-1/4 (133.35)	3-1/8 (79.38)	2-3/4 (69.85)	3/8 (9.52)	1/2 (12.7)	4.5 (2.04)
TTF14401	3	1-1/2	4	6-1/4 (158.75)	4-1/4 (107.95)	2-3/4 (69.85)	3/8 (9.52)	1/2 (12.7)	4.9 (2.22)
TTF20201	2	2	2	5-3/8 (136.52)	3 (76.2)	2-1/2 (63.5)	1/2 (12.7)	1/2 (12.7)	4.3 (1.95)
TTF20301	3	2	3	5-3/8 (136.52)	3-1/8 (79.38)	2-1/2 (63.5)	3/8 (9.52)	1/2 (12.7)	6.8 (3.08)
TTF20401	3	2	4	6-3/4 (171.45)	4-1/4 (107.95)	2-1/2 (63.5)	3/8 (9.52)	1/2 (12.7)	6.0 (2.72)
TTF24301	3	2-1/2	3	5-7/8 (149.22)	3-1/4 (82.55)	2-1/2 (63.5)	1/2 (12.7)	1/2 (12.7)	7.0 (3.17)
TTF24401	3	2-1/2	4	6-7/8 (174.62)	4-1/4 (107.95)	2-1/2 (63.5)	1/2 (12.7)	1/2 (12.7)	7.3 (3.31)
TTF30301	3	3	3	6-1/2 (165.1)	3-1/4 (82.55)	3-1/2 (88.9)	1/2 (12.7)	5/8 (15.88)	10.5 (4.76)
TTF30401	3	3	4	7-1/2 (190.5)	4-1/4 (107.95)	3-1/2 (88.9)	1/2 (12.7)	5/8 (15.88)	10.7 (4.85)
TTF34401	3	3-1/2	4	7-9/16 (192.09)	4-1/4 (107.95)	3 (76.2)	1/2 (12.7)	5/8 (15.88)	12.1 (5.49)
TTF40401	3	4	4	7-3/4 (196.85)	4-1/8 (104.78)	4 (101.6)	5/8 (15.88)	5/8 (15.88)	15.1 (6.85)

TEES WELDMENT ALUMINUM TUBE TO TUBE

ALUMINUM
WTT

Aluminum alloy straight weldment tee for connecting aluminum tubing main to aluminum tubing tap.

Material: **Casting**—356-T6 aluminum alloy

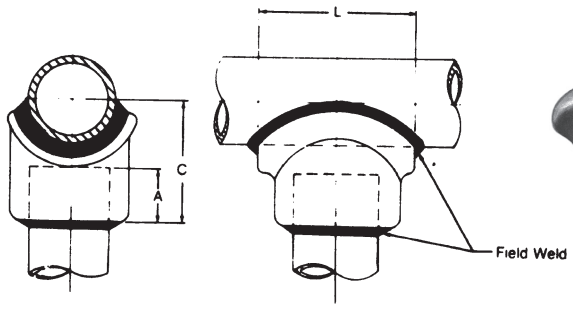

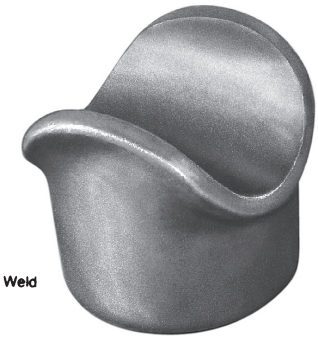

Product Data & Conductor Size

CATALOG NUMBER	ALUMINUM CONDUCTOR SIZE		DIMENSIONS INCHES (MM)			APPROX. WT. EACH LBS. (KG)
	TUBING MAIN IPS/EHIPS	TUBING TAP IPS/EHIPS	L	C	A	
WTT1006	1	3/4	2-1/8 (53.98)	1-7/8 (47.62)	3/4 (19.05)	.40 (.18)
WTT1010	1	1	2-3/8 (60.32)	1-7/8 (47.62)	3/4 (19.05)	.41 (.16)
WTT1210	1-1/4	1	3 (76.2)	2-1/2 (63.5)	1-3/8 (34.92)	.54 (.24)
WTT1212	1-1/4	1-1/4	2-3/4 (69.85)	2-1/4 (57.15)	1 (25.4)	1.6 (.72)
WTT1410	1-1/2	1	2-3/8 (60.32)	2-1/8 (53.98)	3/4 (19.05)	.57 (.26)
WTT1414	1-1/2	1-1/2	3-1/2 (88.9)	2-7/8 (73.02)	1-1/2 (38.1)	.63 (.28)
WTT2004	2	1/2	3-1/4 (82.55)	2-1/2 (63.5)	7/8 (22.22)	.54 (.24)
WTT2006	2	3/4	3-1/4 (82.55)	2-3/4 (69.85)	1-1/8 (28.58)	.60 (.27)
WTT2010	2	1	2-3/4 (69.85)	2-3/8 (60.32)	3/4 (19.05)	.45 (.20)
WTT2012	2	1-1/4	3-1/4 (82.55)	3-1/8 (79.38)	1-1/2 (38.1)	.80 (.36)
WTT2014	2	1-1/2	3-5/8 (92.08)	3-1/4 (82.55)	1-1/2 (38.1)	.69 (.31)
WTT2020	2	2	3-3/4 (95.25)	2-7/8 (73.02)	1-1/4 (31.75)	.98 (.44)
WTT2406	2-1/2	3/4	2-1/2 (63.5)	3 (76.2)	1-1/8 (28.58)	.63 (.28)
WTT2410	2-1/2	1	3-1/4 (82.55)	3-1/8 (79.38)	1-1/4 (31.75)	.75 (.34)
WTT2412	2-1/2	1-1/4	3-1/4 (82.55)	3-3/8 (85.72)	1-1/2 (38.1)	.92 (.42)
WTT2414	2-1/2	1-1/2	3-1/2 (88.9)	3-3/8 (85.72)	1-1/2 (38.1)	1.0 (.45)
WTT2420	2-1/2	2	4 (101.6)	3-19/32 (91.28)	1-3/4 (44.45)	1.2 (.54)
WTT2424	2-1/2	2-1/2	4 (101.6)	3-3/8 (85.72)	1-1/2 (38.1)	1.4 (.64)

Continued on next page.

TEES WELDMENT ALUMINUM TUBE TO TUBE (CONTINUED)

Product Data & Conductor Size

CATALOG NUMBER	ALUMINUM CONDUCTOR SIZE		DIMENSIONS INCHES (MM)			APPROX. WT. EACH LBS. (KG)
	TUBING MAIN IPS/EHIPS	TUBING TAP IPS/EHIPS	L	C	A	
WTT3010	3	1	2-3/8 (60.32)	3 (76.2)	3/4 (19.05)	.72 (.33)
WTT3012	3	1-1/4	3-1/2 (88.9)	3-3/4 (95.25)	1-1/2 (38.1)	1.0 (.45)
WTT3014	3	1-1/2	3-1/2 (88.9)	3-3/4 (95.25)	1-1/2 (38.1)	1.5 (.68)
WTT3020	3	2	4 (101.6)	4 (101.6)	1-3/4 (44.45)	1.6 (.72)
WTT3024	3	2-1/2	4-3/8 (111.12)	4-1/4 (107.95)	2 (50.8)	1.7 (.77)
WTT3030	3	3	5 (127.0)	4 (101.6)	1-3/4 (44.45)	2.3 (.10)
WTT3420	3-1/2	2	4 (101.6)	4-1/4 (107.95)	1-3/4 (44.45)	1.3 (.59)
WTT3424	3-1/2	2-1/2	4-3/8 (111.12)	4-1/2 (114.3)	2 (50.8)	2.0 (.91)
WTT3434	3-1/2	3-1/2	5-5/8 (142.88)	4-1/4 (107.95)	1-3/4 (44.45)	3.9 (1.77)
WTT4010	4	1	2-3/8 (60.32)	2-1/8 (53.98)	3/4 (19.05)	.72 (.33)
WTT4012	4	1-1/4	3 (76.2)	4-1/4 (107.95)	1-1/2 (38.1)	1.0 (.45)
WTT4014	4	1-1/2	4 (101.6)	3-7/8 (98.42)	1-1/8 (28.58)	1.1 (.50)
WTT4020	4	2	4 (101.6)	4-3/4 (120.65)	2 (50.8)	1.9 (.86)
WTT4024	4	2-1/2	4-3/8 (111.12)	4-3/4 (120.65)	2 (50.8)	1.9 (.86)
WTT4030	4	3	5-7/8 (149.22)	5-1/4 (133.35)	2-1/2 (63.5)	2.0 (.91)
WTT4040	4	4	6-1/8 (155.58)	4-3/4 (120.65)	2 (50.8)	3.5 (1.59)
WTT5020	5	2	4 (101.6)	5-3/8 (136.52)	2 (50.8)	2.4 (1.09)
WTT5024	5	2-1/2	4-3/8 (111.12)	4-3/4 (120.65)	1-1/2 (38.1)	2.1 (.95)
WTT5030	5	3	5-5/8 (142.88)	5-7/8 (149.22)	2-1/2 (63.5)	3.8 (1.72)
WTT5034	5	3-1/2	5-5/8 (142.88)	5-7/8 (149.22)	2-1/2 (63.5)	3.9 (1.77)
WTT5040	5	4	6-1/8 (155.58)	5-3/4 (146.05)	2-1/2 (63.5)	6.0 (2.72)
WTT5050	5	5	7-1/4 (184.15)	5-1/4 (133.35)	2 (50.8)	5.3 (2.4)
WTT6030	6	3	5-1/2 (139.7)	5-7/8 (149.22)	2 (50.8)	2.8 (1.27)
WTT6040	6	4	6-1/8 (155.58)	6-3/8 (161.92)	2-1/2 (63.5)	4.4 (2.00)
WTT6060	6	5	8-1/2 (215.9)	6-7/8 (174.6)	3 (76.2)	6.8 (3.08)

TEES WELDMENT ALUMINUM TUBE TO TUBE

ALUMINUM
WTT15

Aluminum alloy angle weldment tee for connecting aluminum tubing main to aluminum tubing tap at 15 degrees.

Material: **Casting**—356-T6 aluminum alloy

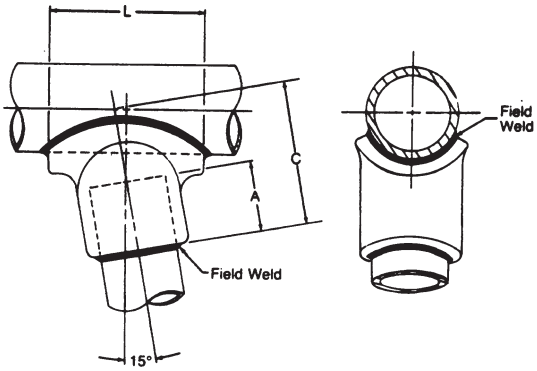

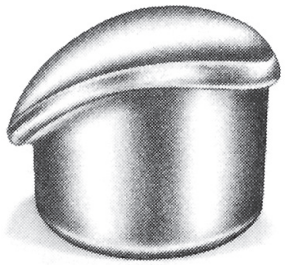

Product Data & Conductor Size

CATALOG NUMBER	ALUMINUM CONDUCTOR SIZE		DIMENSIONS INCHES (MM)			APPROX. WT. EACH LBS. (KG)
	TUBING MAIN IPS/EHIPS	TUBING TAP IPS/EHIPS	L	C	A	
WTT151010	1	1	3-1/4 (82.55)	2-9/16 (65.09)	1-1/4 (31.75)	.50 (.23)
WTT151210	1-1/4	1	3 (76.2)	2-1/2 (63.5)	1 (25.4)	.55 (.25)
WTT151410	1-1/2	1	3 (76.2)	2-9/16 (65.09)	1 (25.4)	.58 (.26)
WTT151412	1-1/2	1-1/4	3-1/2 (88.9)	2-9/16 (65.09)	1 (25.4)	.75 (.34)
WTT151414	1-1/2	1-1/2	3-1/2 (88.9)	3-1/8 (79.38)	1-1/2 (38.1)	.9 (.41)
WTT152010	2	1	3-1/4 (82.55)	3-1/8 (79.38)	1-1/4 (31.75)	.74 (.34)
WTT152012	2	1-1/4	3-1/4 (82.55)	3-3/8 (85.72)	1-1/2 (38.1)	.94 (.43)
WTT152014	2	1-1/2	3-1/2 (88.9)	3-7/16 (87.31)	1-1/2 (38.1)	1.1 (.50)
WTT152020	2	2	4 (101.6)	3-1/4 (87.55)	1-1/4 (31.75)	.97 (.44)
WTT152410	2-1/2	1	3-1/4 (82.55)	3-3/8 (85.72)	1-5/16 (33.34)	.71 (.32)
WTT152412	2-1/2	1-1/4	3-1/4 (82.55)	3-1/8 (79.38)	1 (25.4)	.63 (.29)
WTT152414	2-1/2	1-1/2	3-1/2 (88.9)	3-3/16 (80.96)	1 (25.4)	.75 (.34)
WTT152420	2-1/2	2	4 (101.6)	4 (101.6)	1-3/4 (44.45)	1.4 (.64)
WTT152424	2-1/2	2-1/2	4-5/8 (117.48)	4-5/16 (109.54)	2 (50.8)	2.2 (1.0)
WTT153010	3	1	3-1/2 (88.9)	3-13/16 (96.84)	1-1/4 (31.75)	.95 (.43)
WTT153012	3	1-1/4	3-1/2 (88.9)	4-1/16 (103.19)	1-1/2 (38.1)	1.0 (.45)
WTT153014	3	1-1/2	3-1/2 (88.9)	4-9/16 (115.89)	1-1/2 (38.1)	1.2 (.54)
WTT153020	3	2	4 (101.6)	3-7/8 (98.42)	1-1/4 (31.75)	1.3 (.59)
WTT153024	3	2-1/2	4-3/8 (111.12)	4-11/16 (119.06)	2 (50.8)	2.3 (1.04)
WTT153030	3	3	5-1/8 (130.18)	4-11/16 (119.06)	1-3/4 (44.45)	2.4 (1.09)

Continued on next page.

TEES WELDMENT ALUMINUM TUBE TO TUBE (CONTINUED)

Product Data & Conductor Size

CATALOG NUMBER	ALUMINUM CONDUCTOR SIZE		DIMENSIONS INCHES (MM)			APPROX. WT. EACH LBS. (KG)
	TUBING MAIN IPS/EHIPS	TUBING TAP IPS/EHIPS	L	C	A	
WTT153412	3 -1/2	1-1/4	4 (101.6)	4-1/8 (104.78)	1-3/8 (34.92)	1.1 (.50)
WTT153414	3 -1/2	1-1/2	3-1/2 (88.9)	4-3/8 (111.12)	1-1/2 (38.1)	1.2 (.54)
WTT153420	3 -1/2	2	4 (101.6)	4-1/8 (104.78)	1-1/4 (31.75)	1.3 (.59)
WTT153424	3 -1/2	2-1/2	4-3/8 (111.12)	4-1/2 (114.3)	1-1/2 (38.1)	1.6 (.72)
WTT153430	3 -1/2	3	6 (152.4)	4-13/16 (122.24)	1-3/4 (44.45)	2.4 (1.09)
WTT153434	3 -1/2	3-1/2	6 (152.4)	5-1/8 (130.18)	2 (50.8)	3.8 (1.72)
WTT154012	4	1-1/4	3-1/2 (88.9)	4-9/16 (115.89)	1-1/2 (38.1)	1.1 (.50)
WTT154014	4	1-1/2	3-1/2 (88.9)	4-5/8 (117.48)	1-1/2 (38.1)	1.1 (.50)
WTT154020	4	2	4 (101.6)	4-3/8 (111.12)	1-1/4 (31.75)	1.4 (.64)
WTT154024	4	2-1/2	4-3/8 (111.12)	4-3/4 (120.65)	1-1/2 (38.1)	1.6 (.72)
WTT154030	4	3	5-1/8 (130.18)	5 (127.0)	1-3/4 (44.45)	2.5 (1.13)
WTT154034	4	3-1/2	5-5/8 (142.88)	5-3/8 (136.52)	2 (50.8)	3.0 (1.36)
WTT154040	4	4	6-1/8 (155.58)	5- 7/16 (138.11)	2 (50.8)	4.1 (1.86)
WTT155014	5	1-1/2	4 (101.6)	5-3/16 (131.76)	1-1/2 (38.1)	1.33 (.60)
WTT155020	5	2	4 (101.6)	5-3/4 (146.05)	2 (50.8)	2.0 (.91)
WTT155024	5	2-1/2	4-3/8 (111.12)	5-3/8 (136.52)	1-1/2 (38.1)	1.8 (.82)
WTT155030	5	3	5-1/8 (130.18)	5-11/16 (144.46)	2-1/2 (63.5)	2.5 (1.13)
WTT155034	5	3-1/2	5-5/8 (142.88)	6-7/16 (163.5)	2-1/2 (63.5)	3.0 (1.36)
WTT155040	5	4	6-1/2 (165.1)	6-7/16 (163.5)	2-1/4 (57.15)	3.5 (1.59)
WTT155050	5	5	7-5/8 (193.68)	6-11/16 (169.86)	2-3/4 (69.85)	4.4 (2.0)
WTT156014	6	1-1/2	5-1/8 (130.18)	5-3/4 (146.05)	1-1/2 (38.1)	1.4 (.64)
WTT156020	6	2	5-1/4 (133.35)	6-5/16 (160.34)	2 (50.8)	2.2 (1.0)
WTT156024	6	2-1/2	4-3/4 (120.65)	5-7/8 (149.22)	1-1/2 (38.1)	1.65 (.75)
WTT156030	6	3	5-1/8 (130.18)	7 (177.8)	2-1/2 (63.5)	3.3 (1.50)
WTT156034	6	3-1/2	5-3/4 (146.05)	5-3/4 (146.05)	1-1/4 (31.75)	3.8 (1.72)
WTT156040	6	4	6-1/8 (155.58)	6-5/8 (168.28)	2 (50.8)	4.4 (2.0)

TEES WELDMENT ALUMINUM TUBE TO TWO TUBE

ALUMINUM
WTT215

Aluminum alloy angle weldment tee for connecting aluminum tubing main to two aluminum tubing taps at 15 degrees.

Material: **Casting**—356-T6 aluminum alloy

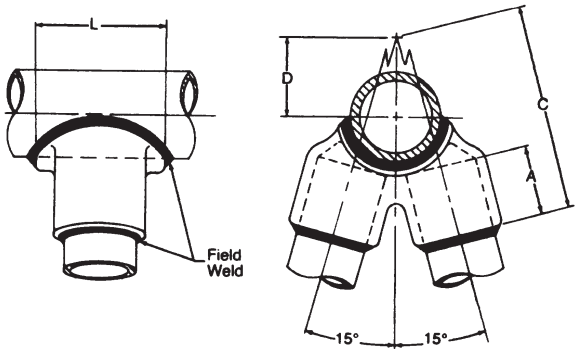

Product Data & Conductor Size

CATALOG NUMBER	ALUMINUM CONDUCTOR RANGE		DIMENSIONS INCHES (MM)				APPROX. WT. EACH LBS. (KG)
	TUBING MAIN IPS/EHIPS	TUBING TAP IPS/EHIPS	L	C	D	A	
WTT2151010	1	1	3-1/8 (79.38)	3-11/16 (93.66)	2-11/16 (68.26)	1 (25.4)	.9 (.41)
WTT2151210	1-1/4	1	3 (76.2)	4-15/16 (125.41)	2-13/16 (71.44)	1 (25.4)	1.0 (.45)
WTT2151410	1-1/2	1	3 (76.2)	4-15/16 (125.41)	2-11/16 (68.26)	1 (25.4)	1.0 (.45)
WTT2151412	1-1/2	1-1/4	3-1/2 (88.9)	5-11/16 (144.46)	3-7/16 (87.31)	1 (25.4)	1.1 (.50)
WTT2151414	1-1/2	1-1/2	3-1/4 (82.55)	6-1/2 (165.1)	3-3/4 (95.25)	1-1/2 (38.1)	1.4 (.64)
WTT2152010	2	1	3-1/8 (79.38)	5-5/16 (134.44)	2-1/2 (63.5)	1-3/8 (34.92)	2.8 (1.27)
WTT2152012	2	1-1/4	3-1/4 (82.55)	6-3/16 (157.16)	3-3/16 (80.96)	1-1/2 (38.1)	1.5 (.68)
WTT2152014	2	1-1/2	3-1/2 (88.9)	6-9/16 (166.69)	3-9/16 (90.49)	1-1/2 (38.1)	1.7 (.77)
WTT2152020	2	2	4 (101.6)	7-5/16 (185.74)	4-3/8 (111.12)	1-1/2 (38.1)	2.1 (.95)
WTT2152410	2-1/2	1	3-1/4 (82.55)	5 (127.0)	2-3/16 (55.56)	1 (25.4)	1.3 (.60)
WTT2152412	2-1/2	1-1/4	3-1/4 (82.55)	6-3/16 (157.16)	2-15/16 (74.61)	1-1/2 (38.1)	1.6 (.72)
WTT2152414	2-1/2	1-1/2	3-1/2 (88.9)	6-9/16 (166.69)	3-5/16 (84.14)	1-1/2 (38.1)	1.9 (.86)
WTT2152420	2-1/2	2	4 (101.6)	7-3/4 (196.85)	4-5/16 (109.54)	1-3/4 (44.45)	2.2 (1.0)
WTT2152424	2-1/2	2-1/2	4-1/2 (114.3)	8-7/8 (225.42)	5-3/16 (131.76)	2 (50.8)	3.2 (1.45)
WTT2153012	3	1-1/4	3-1/4 (82.55)	6-1/4 (158.75)	2-5/8 (66.68)	1-1/2 (38.1)	1.8 (.82)
WTT2153014	3	1-1/2	3-1/2 (88.9)	6-1/16 (153.99)	2-7/16 (61.91)	1-1/2 (38.1)	1.9 (.86)
WTT2153020	3	2	4 (101.6)	7-3/4 (196.85)	3-3/8 (85.72)	1-3/4 (44.45)	2.6 (1.18)
WTT2153024	3	2-1/2	4-3/8 (111.12)	8-15/16 (227.01)	4-7/8 (123.82)	2 (50.8)	3.0 (1.36)
WTT2153030	3	3	5-1/2 (139.7)	10 (254.0)	6-1/4 (158.75)	1-3/4 (44.45)	5.0 (2.27)

Continued on next page.

TEES WELDMENT ALUMINUM TUBE TO TWO TUBE (CONTINUED)

CATALOG NUMBER	ALUMINUM CONDUCTOR RANGE		DIMENSIONS INCHES (MM)				APPROX. WT. EACH LBS. (KG)
	TUBING MAIN IPS/EHIPS	TUBING TAP IPS/EHIPS	L	C	D	A	
WTT2153414	3-1/2	1-1/2	3-1/2 (88.9)	6-9/16 (166.69)	2-11/16 (68.26)	1-1/2 (38.1)	1.9 (.86)
WTT2153420	3-1/2	2	4 (101.6)	7-3/4 (196.85)	3-5/8 (92.08)	1-3/4 (44.45)	2.6 (1.18)
WTT2153424	3-1/2	2-1/2	4-3/8 (111.12)	9-3/16 (233.36)	4-3/4 (120.65)	2 (50.8)	3.5 (1.59)
WTT2153430	3-1/2	3	6 (152.4)	10 (254)	6 (152.4)	1-3/4 (44.45)	5.8 (2.63)
WTT2153434	3-1/2	3-1/2	6 (152.4)	11-11/16 (296.86)	7 (177.8)	2-1/2 (63.5)	6.6 (2.99)
WTT2154014	4	1-1/2	4-3/8 (111.12)	6-1/2 (165.1)	2-3/8 (60.32)	1-1/2 (38.1)	2.4 (1.09)
WTT2154020	4	2	4-3/8 (111.12)	8 (203.2)	3-3/8 (85.72)	2 (50.8)	3.1 (1.41)
WTT2154024	4	2-1/2	4-3/8 (111.12)	8-15/16 (227.01)	4-3/8 (111.12)	2 (50.8)	3.9 (1.77)
WTT2154030	4	3	5-1/8 (130.18)	11-1/4 (285.75)	5-11/16 (144.46)	3 (76.2)	6.9 (3.13)
WTT2154034	4	3-1/2	6 (152.4)	11-3/16 (284.16)	6-11/16 (169.86)	2 (50.8)	6.4 (2.9)
WTT2154040	4	4	5-1/2 (139.7)	11-1/8 (282.58)	6-1/4 (158.75)	2-3/8 (60.32)	5.6 (2.54)
WTT2155020	5	2	5-1/8 (130.18)	8-1/16 (204.79)	3-1/8 (79.38)	1-3/4 (44.45)	3.6 (1.63)
WTT2155024	5	2-1/2	4-3/8 (111.12)	8-7/8 (225.42)	3-3/4 (95.25)	2 (50.8)	2.4 (1.09)
WTT2155030	5	3	5-1/8 (130.18)	10-5/16 (277.81)	5-5/16 (134.94)	2-1/2 (63.5)	6.6 (2.99)
WTT2155034	5	3-1/2	6-1/8 (155.58)	11-7/8 (301.62)	6-5/16 (160.34)	2-1/2 (63.5)	6.54 (2.97)
WTT2155040	5	4	6-1/2 (165.1)	12-7/16 (315.91)	7-1/8 (180.98)	2-1/4 (57.15)	6.5 (2.95)
WTT2156020	6	2	5 (127)	7-5/16 (185.74)	2-5/16 (58.74)	1-1/4 (31.75)	3.6 (1.63)
WTT2156024	6	2-1/2	5 (127)	8-7/16 (214.31)	3-3/16 (80.96)	1-1/2 (38.1)	3.75 (1.7)
WTT2156030	6	3	5-1/8 (130.18)	10-15/16 (277.81)	4-3/4 (120.65)	2-1/2 (63.5)	6.2 (2.81)
WTT2156040	6	4	6-1/8 (155.58)	12-11/16 (322.26)	6-9/16 (166.69)	2-1/2 (63.5)	9.0 (4.08)

TEES WELDMENT ALUMINUM TUBE TO FLAT

ALUMINUM

WTTFR

Aluminum alloy weldment. Range taking tee for connecting aluminum tubing main to flat bar. Tongue holes have NEMA spacing. Contact surfaces on both sides of tongue. Contact sealant is recommended for pads after welding.

Material: **Casting**—356-T6 aluminum alloy

Note: To obtain 90 degree transverse type, add 90 to catalog number. Example: WTTFR3060D90.

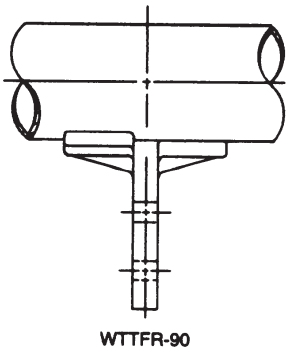

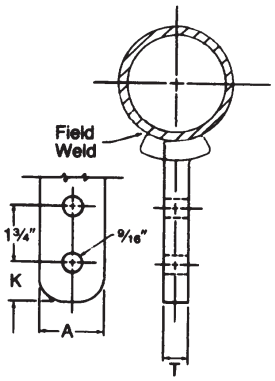

Fig. 1

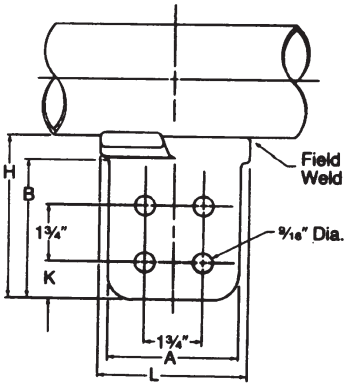

Fig. 2

Product Data & Conductor Size

CATALOG NUMBER	FIG. NO.	ALUMINUM CONDUCTOR RANGE IPS/EHIPS	DIMENSIONS INCHES (MM)						APPROX. WT. EACH LBS. (KG)
			L	A	H	B	T	K	
WTTFR1024B2	1	1 - 2 1/2	2-3/4 (69.85)	2 (50.8)	3-7/8 (98.42)	3-1/4 (82.55)	5/8 (15.88)	5/8 (15.88)	.63 (.28)
WTTFR1024C	2	1 - 2 1/2	3-7/8 (98.42)	3 (76.2)	3-7/8 (98.42)	3-1/4 (82.55)	5/8 (15.88)	5/8 (15.88)	.81 (.37)
WTTFR1024D	2	1 - 2 1/2	4 (101.6)	4 (101.6)	4-5/8 (117.48)	4-1/8 (104.78)	1/2 (12.7)	1-1/8 (28.58)	.85 (.39)
WTTFR3060B2	1	3-6	3 (76.2)	2 (50.8)	4 (101.6)	3-1/4 (82.55)	3/4 (19.05)	5/8 (15.88)	.64 (.29)
WTTFR3060C	2	3-6	4-1/4 (107.95)	3 (76.2)	4 (101.6)	3-1/4 (82.55)	3/4 (19.05)	5/8 (15.88)	1.0 (.45)
WTTFR3060D	2	3-6	4 (101.6)	4 (101.6)	4-5/8 (117.48)	4-1/8 (104.78)	3/4 (19.05)	1-1/8 (28.58)	1.6 (.72)
WTTFR6080D	2	6-8 & 8 O.D.	4-1/2 (114.3)	4 (101.6)	5 (127.0)	4-1/4 (107.95)	1 (25.4)	1-1/8 (28.58)	2.4 (1.09)

ALUMINUM
ORT21

TEE TAPS COMPRESSION CABLE TO PAD - OPEN RUN AAC, AAAC, ACAR AND ACSR CONDUCTORS

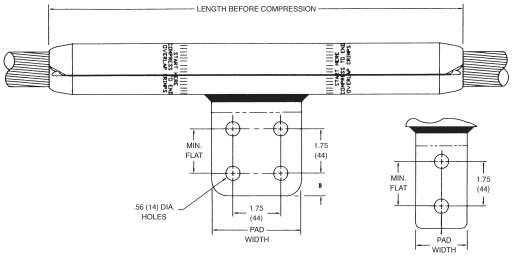

Tapers and pad are coated with protective strippable plastic. Pad holes have NEMA spacing.

Material: Barrel Extruded Aluminum Alloy Tube
Pad-Pure Cast Aluminum

IDENTIFICATION:
CONDUCTOR TYPE & DIAMETER RANGE DIE SIZE, MINIMUM PRESS SIZE, DATE CODE, FARGO UNI-GRIP CATALOG NO.

Product Data & Conductor Size

FARGO CATALOG NUMBER	CONDUCTOR RANGE (1)			PAD DETAILS		LENGTH BEFORE COMPR. IN (MM)	DIE SIZE (2)	MINI-MUM PRESS (TONS)	NET WEIGHT LB (KG)
	O.D. IN/(MM)	AAC SIZE KCMIL	ACSR SIZE KCMIL (STR)	BOLT HOLES	WIDTH IN (MM)				
ORT2107	0.595 - 0.679 (15.1 - 17.2)	300, 336.4, 350	266.8 (18/1) (6/7) (26/7)	2	2.0 (51)	11.3 (287)	07CD	12	0.84 (0.37)
ORT2108	0.680 - 0.765 (17.3 - 19.4)	350, 397.5, 400	336.4 (18/1) (26/7) (30/7), 397.5 (18/1)	2	2.0 (51)	12.7 (323)	08CD	12	1.1 (0.48)
ORT2109 ORT2109C	0.766 - 0.855 (19.5 - 21.7)	450, 477, 500, 550	397.5 (24/7) (26/7) (30/7), 477 (18/1) (24/7)	2 4	2.0 (51) 3.0 (76)	13.4 (340) 14.4 (366)	09CD	12	1.4 (0.61) 1.5 (0.65)
ORT2110 ORT2110C	0.856 - 0.950 (21.7 - 24.1)	556.5, 600, 636, 650	477 (26/7) (30/7), 556.5 (18/1) (24/7) (26/7), 636 (18/1) (36/1)	2 4	2.0 (51) 3.0 (76)	14.3 (363) 15.3 (389)	10CD 24AH	60	1.7 (0.74) 1.8 (0.78)
ORT2111	0.950 - 1.045 (24.2 - 26.5)	700, 715.5, 750, 795	556.5 (30/7), 605 (24/7) (26/7) (30/19), 636 (18/1) – (30/19), 666 (24/7) (26/7), 715.5 (24/7)	4	3.0 (76)	16.3 (414)	11CD	60	2.5 (1.09)
ORT2112 ORT2112D	1.026 - 1.131 (26.1 - 28.7)	795, 800, 874.5, 900, 954	715.5 (24/7) (26/7) (30/19), 795 (24/7) (26/7) (45/7) (54/7), 795 (36/1), 900 (45/7)	4	3.0 (76) 4.0 (102)	17.3 (439) 18.3 (465)	12CD	60	3.1 (1.35) 3.3 (1.50)
ORT2113 ORT2113D	1.140 - 1.235 (29.0 - 31.4)	1000, 1033.5,	795 (30/19)	4	3.0 (76) 4.0 (102)	18.5 (470) 19.5 (495)	13CD 30AH	60	3.6 (1.57) 3.8 (1.66)
		1100, 1113	900 (54/7), 954 (45/7) (54/7), 1033.5 (36/1) (45/7)	4			13CD		
ORT2114 ORT2114D	1.236 - 1.330 (31.5 - 33.8)	1192.5, 1200, 1250 1272, 1300	954 (30/19), 1033.5 (54/7), 1113 (45/7) (54/19), 1192.5 (45/7)	4	3.0 (76) 4.0 (102)	19.8 (503) 20.8 (528)	14CD 34AH	60	4.6 (2.00) 4.8 (2.09)
ORT2115 ORT2115D	1.331 - 1.425 (33.9 - 36.2)	1351,5, 1400, 1431, 1500, 1510.5	1192.5 (54/19), 1272 (45/7) (54/19), 1351.5 (45/7) (54/19)	4	3.0 (76) 4.0 (102)	20.7 (526) 21.7 (551)	15CD 36AH	60	5.5 (2.40) 5.7 (2.48)
ORT2116 ORT2116D	1.426 - 1.520 (36.3 - 38.6)	1590, 1600, 1700	1431 (45/7) (54/19), 1510.5 (45/7) (54/19), 1590 (45/7)	4	3.0 (76) 4.0 (102)	21.6 (549) 22.6 (574)	16CD 38AH	60	6.1 (2.66) 6.3 (2.74)
ORT2117	1.521 - 1.615 (38.7 - 41.0)	1750, 1800, 1900	1590 (54/19) 1780 (84/19), 1869 (68/7)	4	4.0 (102)	23.5 (597)	17CD	60	7.8 (3.40)
ORT2119	1.630 - 1.805 (41.4 - 45.8)	2000, 2250, 2300	2034.5 (72/7), 2057 (76/19), 2167 (72/7)	4	4.0 (102)	25.4 (645)	19CD 44AH	100	10.2 (4.43)
		–	2156 (84/19), 2312 (76/19)	4			19CD		

(1) These tee taps also approved application on AAAC and ACAR conductors within the diameter ranges listed.
(2) Hex dies not available for some sleeve & conductor combinations. If no AH die listed for conductor, use only the CD die shown.
(3) Install with Fargo type UJC or, for lowest resistance connection, type HTJC inhibitor compound.
(4) Tees are EHV rated where conductor is 1.0 in. (25.4 mm) O.D. or larger, and pad connection is shielded.

TEE TAPS COMPRESSION CABLE TO CABLE - OPEN RUN AAC, ALLOY, ACAR AND ACSR CONDUCTORS

ALUMINUM
ORT22

Tap barrel is prefilled with inhibitor. Tee connector is sealed in UV resistant clear plastic.

Material: Extruded Aluminum Alloy Tube

IDENTIFICATION:

RUN

CONDUCTOR TYPE & DIAMETER RANGE
DIE SIZE, MINIMUM PRESS SIZE
PART NUMBER
DATE CODE

TAP

CONDUCTOR DIAMETER RANGE
DIE SIZE, MINIMUM PRESS SIZE

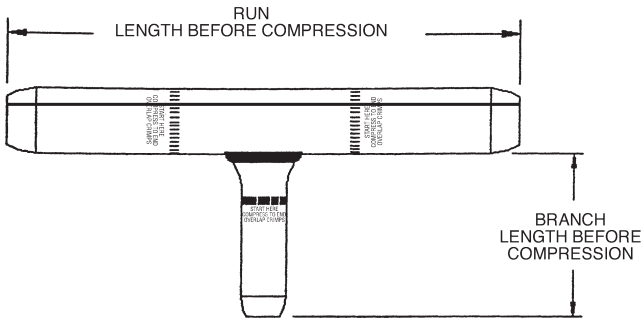

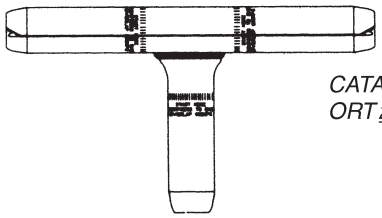

CATALOG NO.
ORT 22 XX XX
TAP CODE
RUN CODE
PRODUCT SERIES

Product Data & Conductor Size

CONDUCTOR RANGE (1)			RUN OR TAP CODE	LENGTH BEFORE COMPR.		DIE SIZE	MINIMUM PRESS SIZE (TONS)	NET WEIGHT LB (KG)
O.D. IN (MM)	AAC SIZE KCMIL	ACSR SIZE KCMIL (STR)		RUN IN (MM)	TAP IN (MM)			
0.595 - 0.679 (15.1 - 17.2)	300, 336.4, 350	266.8 (18/1) (6/7) (26/7)	07	10.7 (272)	3.6 (91)	07CD	12	0.51 (0.23)
0.680 - 0.765 (17.3 - 19.4)	350, 397.5, 400	300 (26/7), 336.4 (18/1) (26/7) (30/7), 395.5 (18/1)	08	12.3 (311)	4.1 (105)	08CD 76AH	12	0.76 (0.34)
0.766 - 0.855 (19.5 - 21.7)	450, 477, 500, 550	397.5 (24/7) (26/7) (30/7), 477 (18/1) (24/7)	09	13.8 (350)	4.6 (118)	09CD	12	1.10 (0.49)
0.856 - 0.950 (21.7 - 24.1)	556.5, 600, 636, 650	477 (26/7) (30/7), 556.5 (18/1) (24/7) (26/7) 636 (18/1) (36/1)	10	14.3 (363)	5.2 (131)	10CD 24AH	60	1.40 (0.63)
0.950 - 1.045 (24.2 - 26.5)	700, 715, 750, 795	556.5 (30/7), 605 (24/7) (26/7) (30/19) 636 (24/7) (26/7) (30/19) 666 (24/7) (26/7) 715.5 (24/7)	11	15.7 (400)	5.7 (144)	11CD	60	1.90 (0.86)
1.026 - 1.131 (26.1 - 28.7)	795, 800, 874.5, 900, 954	715.5 (26/7) (30/19), 795 (24/7) (26/7) (45/7) 795 (54/7) 795 (36/1) 900 (45/7)	12	17.2 (436)	6.2 (157)	12CD	60	2.40 (1.09)
1.140 - 1.235 (29.0 - 31.4)	1000, 1033.5	795.5 (30/19)	13	18.6 (473)	6.7 (170)	13CD 30AH	60	3.00 (1.36)
	1100, 1113	795.5 (30/19), 900 (54/7), 954 (45/7 (54/7) 1033.5 (36/1) (45/7)				13CD		
1.236 - 1.330 (31.5 - 33.8)	1192.5, 1200, 1250, 1272, 1300	954 (30/19), 1113 (45/7) (54/19), 1192.5 (45/7), 1272 (36/1)	14	20.1 (509)	7.2 (183)	14CD 34AH	60	3.80 (1.73)
1.331 - 1.425 (33.9 - 36.2)	1351.5, 1400, 1431, 1500, 1510.5	1192.5 (54/19), 1272 (45/7) (54/19), 1351.5 (45/7) (54/19)	15	21.5 (546)	7.7 (197)	15CD 36AH	60	4.70 (2.14)

Continued on next page.

TEE TAPS
COMPRESSION
CABLE TO CABLE - OPEN RUN
AAC, ALLOY, ACAR AND ACSR CONDUCTORS
(CONTINUED)

Product Data & Conductor Size

CONDUCTOR RANGE (1)			RUN OR TAP CODE	LENGTH BEFORE		DIE SIZE	MINIMUM PRESS SIZE (TONS)	NET WEIGHT LB (KG)
O.D. IN (MM)	AAC SIZE KCMIL	ACSR SIZE KCMIL (STR)		RUN IN (MM)	TAP IN (MM)			
1.426 - 1.520	1590, 1600, 1700	1431 (45/7) (54/19), 1510.5 (45/7) (54/19), 1590 (45/7)	16	21.3 (541)	8.2 (210)	16CD 38AH	60	5.30 (2.41)
1.521 - 1.615	1750, 1800, 1900	1590 (54/19), 1780	17	22.6 (575)	8.8 (223)	17CD 40AH	60	6.30 (2.86)
1.630 - 1.805	2000, 2250, 2300	2034.5 (72/7), 2057 (76/19) 2167 (72/7)	19	25.3 (643)	9.8 (249)	19CD 44AH	100	8.90 (4.04)
	-	2156 (84/19), 2312 (76/19)				19CD		

CATALOG NO.
ORT 22 XX XX

- *XX* → *TAP CODE*
- *XX* → *RUN CODE*
- *22* → *PRODUCT SERIES*

NOTES:
(1) These tee taps also approved application on AAAC and ACAR conductors within the diameter ranges listed.
(2) Standard Hex dies not available for some sleeve & conductor combinations. If no AH die listed for conductor, use only the CD die shown.
(3) Install with Fargo type UJC or, for lowest resistance connection, type HTJC inhibitor compound.
(4) Tees are EHV rated where main and tap conductors are 1.0 in. (25.4 mm) O.D. or larger.

TEE TAPS
COMPRESSION COPPER
CABLE TO CABLE

COPPER
BCTCC

Copper compression tee for connecting a continuous run copper cable to a copper cable tap.

Material: CDA 110 copper

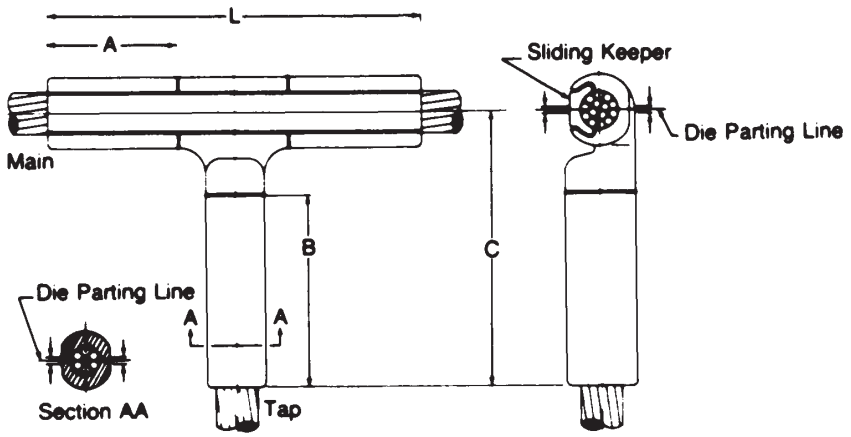

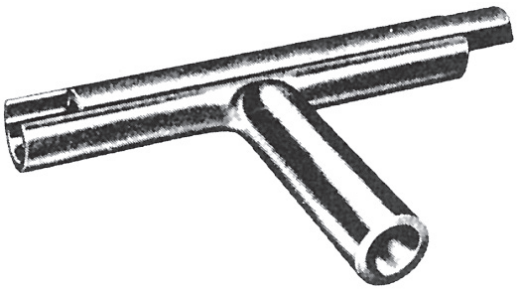

SC 37

Product Data & Conductor Size

CATALOG NUMBER	COPPER CONDUCTOR RANGE				DIE REF.		DIMENSIONS INCHES (MM)				APPROX. WT. EACH LBS. (KG)
	MAIN		TAP								
	CABLE	DIA.	CABLE	DIA.	MAIN	TAP	L	A	C	B	
BCTCC025024	250 MCM	.575 (14.60)	4/0 Str.	.522 (13.26)	.840	.840	8 (203.2)	3-1/2 (88.9)	4-1/2 (114.3)	3 (76.2)	1.2 (.5)
BCTCC025025	250 MCM	.575 (14.60)	250 MCM	.575 (14.60)	.840	.840	8 (203.2)	3-1/2 (88.9)	4-1/2 (114.3)	3 (76.2)	1.0 (.5)
BCTCC050050	500 MCM	.813 (20.65)	500 MCM	.813 (20.65)	1.125	1.125	10 (254.0)	4-7/16 (112.72)	5-9/16 (141.3)	4 (101.6)	1.4 (.6)

CONVENTIONAL COMPRESSION DIE INFORMATION

DIE INDEX	KEARNEY	ALCOA	BURNDY	T&B
.840	.840 OR .849	74AH	249	76
1.000	1.000	75AH	251	
1.125	1-1./8	76AH	490,347,316	96
1.312	1-5/16	20AH	327,317,426,300	106
1.500	1-1/2	24AH	318,261,608	125
1.843	K6030AH	30AH	292,302,352,579	150
2.125	2-1/8	34AH	422,575	160,161
2.375	2-3/8	38AH	478,728	189
2.937	2-15/16	48AH		250

NOTES:
1. Crimps should be overtap and start from the inside working outward with the last crimp extended past the end of the connector.
2. It is recommended that a light coat of lubricant (such as Anderson's 155 grease) be applied to the crimping face of the dies.

COPPER

BCTCF

TEES
COMPRESSION COPPER
CABLE TO FLAT

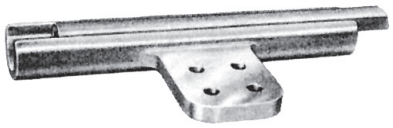

Copper compression tee for connecting a continuous copper cable to flat pad. Pad holes have NEMA spacing with contact surfaces on both sides.

Material: CDA 110 copper

Refer to table on previous page for tool and die information.

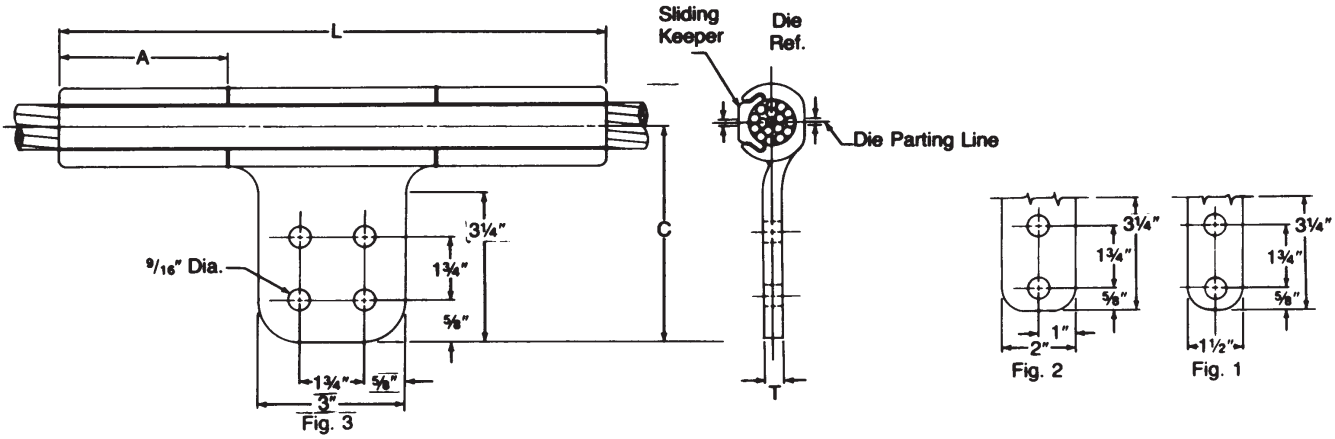

Product Data & Conductor Size

CATALOG NUMBER	FIG. NO.	COPPER CONDUCTOR RANGE		DIE REF.	DIMENSIONS INCHES (MM)				APPROX. WT. EACH LBS. (KG.)
		CABLE	DIA.		L	A	C	T	
BCTCF024B	1	4/0 Str.	.528 (13.41)	.840	8 (203.2)	3-1/4 (82.5)	4-1/2 (114.3)	1/4 (6.4)	1.3 (.6)
BCTCF025B	1	250 MCM	.575 (14.60)	.840	8 (203.2)	3-1/4 (82.5)	4-1/2 (114.3)	1/4 (6.4)	1.3 (.6)
BCTCF025C	3			.840	8 (203.2)	2-1/2 (63.5)	4-1/2 (114.3)	1/4 (6.4)	1.8 (.8)
BCTCF050B2	2	500 MCM	.813 (20.65)	1.125	10 (254.0)	4-1/8 (104.8)	4-9/16 (115.9)	1/4 (6.4)	1.8 (.8)
BCTCF050C	3			1.125	10 (254.0)	3-1/2 (88.9)	4-9/16 (115.9)	1/4 (6.4)	2.3 (1.0)
BCTCF075C	3	750 MCM	.998 (25.35)	1.500	11 (279.4)	4 (101.6)	4-5/8 (117.5)	1/4 (6.4)	4.2 (1.9)
BCTCF100C	3	1000 MCM	1.152 (29.26)	1.500	11 (279.4)	4 (101.6)	4-3/4 (120.7)	1/4 (6.4)	3.0 (1.4)

HUBBELL

SUBSTATION CONNECTORS

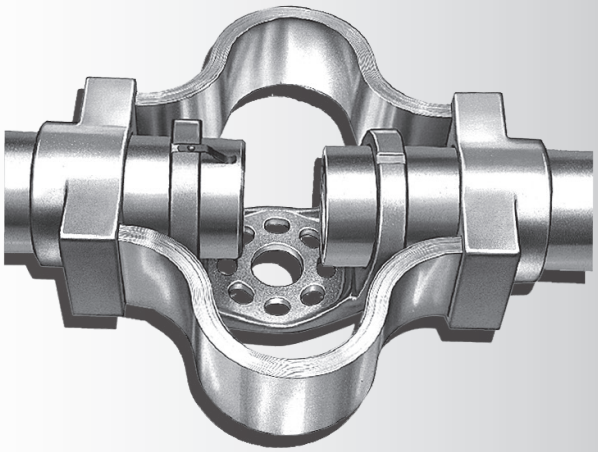

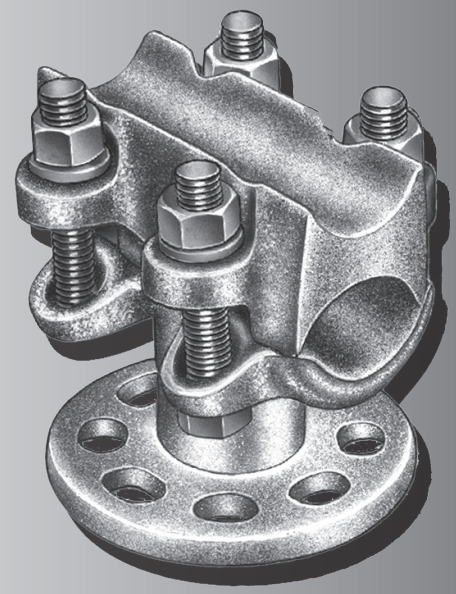

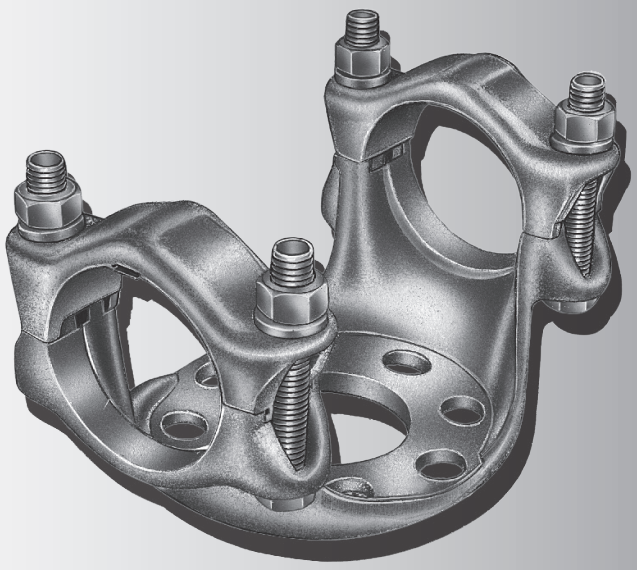

SECTION SD

BUS SUPPORTS

Aluminum Bolted
Aluminum Weldment
Bronze Bolted

BUS SUPPORTS

BOLTED/ALUMINUM

ACS ..... CABLE TO INSULATOR SD-1
ADCS ..... TWO CABLE OR TUBES TO INSULATOR SD-3
ASR ..... CABLE OR TUBE TO INSULATOR SD-2
ATSF ..... TUBE TO INSULATOR SD-5
AUDE ..... VERTICAL, TUBE TO INSULATOR SD-7
AUR ..... TUBE TO INSULATOR SD-4
AURC ..... TUBE TO INSULATOR (COUPLER) SD-6
AURF ..... EXPANSION, TUBE TO INSULATOR SD-8

BOLTED/BRONZE

BHX ..... FLAT BAR TO INSULATOR SD-15
BVX ..... VERTICAL RIGID, FLAT BAR TO INSULATOR SD-17
BVXA ..... VERTICAL SLIP TYPE, FLAT BAR TO INSULATOR SD-16
CDSB ..... TWO CABLES OR TUBES TO INSULATOR SD-12
CSSB ..... CABLE OR TUBE TO INSULATOR SD-11
ICA ..... CABLE OR TUBE TO INSULATOR SD-10
UDE ..... VERTICAL, TUBE TO INSULATOR SD-14
UP ..... TUBE TO INSULATOR SD-13

WELDMENT/ALUMINUM

WTH ..... TUBE TO INSULATOR SD-20
WUDE ..... TUBE TO INSULATOR SD-23
WURE ..... TUBE TO INSULATOR SD-19
WURF ..... EXPANSION, TUBE TO INSULATOR SD-22

BUS SUPPORTS ALUMINUM CABLE TO INSULATOR

ALUMINUM
ACS

Aluminum alloy bus support for aluminum cable. Clamping bolts have hex-stops for one-wrench installation.

Cap screws are supplied for upright mounting.

Material: **Castings**—356-T6 aluminum alloy
Clamping hardware—aluminum alloy
Mounting hardware—galvanized steel

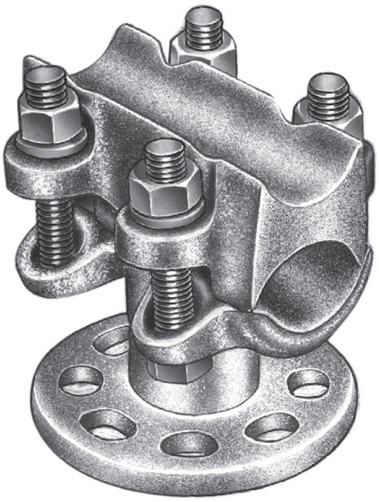

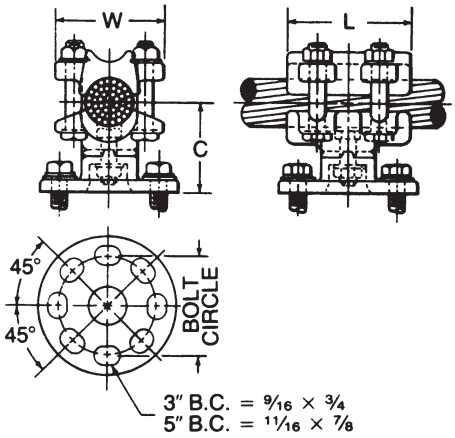

SD 1

Product Data & Conductor Size

CATALOG NUMBER	CABLE RANGE		CABLE DIAMETER (MM)		BOLT CIRCLE DIA.	DIMENSIONS INCHES (MM)			APPROX. WT. EACH LBS. (KG)
	AAC	ACSR	SMALL GROOVE	LARGE GROOVE		L	C	W	
ACS63	#4-250 MCM	#4-4/0	.232-.500 (5.9)-(12.7)	.500-.575 (12.5)-(14.6)	3	3 (76.2)	2-5/8 (69.9)	2-7/16 (61.9)	1.9 (.86)
ACS65	#4-250 MCM	#4-4/0			5	3 (76.2)	2-5/8 (69.9)	2-7/16 (61.9)	2.8 (1.27)
ACS93	4/0-600 MCM	4/0-477	.522-.656 (13.3)-(16.7)	.656-.893 (16.7)-(22.7)	3	3-1/4 (82.6)	2-3/4 (69.9)	2-11/16 (68.2)	2.2 (1.0)
ACS95	4/0-600 MCM	4/0-477			5	3-1/2 (88.9)	2-3/4 (69.9)	2-11/16 (68.2)	3.1 (1.41)
ACS133	600-1250 MCM	556.5-1113	.870-1.125 (21.1)-(28.6)	1.125-1.293 (28.6)-(32.8)	3	3-3/4 (95.3)	3 (76.2)	3-3/16 (80.9)	2.5 (1.14)
ACS135	600-1250 MCM	556.5-1113			5	3-3/4 (95.3)	3 (76.2)	3-3/16 (80.9)	3.4 (1.55)
ACS163	1250-2000 MCM	1113-1780	1.289-1.379 (32.0)-(35.0)	1.345-1.632 (34.2)-(41.5)	3	4-1/2 (114.3)	3-1/8 (79.4)	3-9/16 (80.9)	3.1 (1.41)
ACS165	1250-2000 MCM	1113-1780			5	4-1/2 (114.3)	3-1/8 (79.4)	3-9/16 (80.9)	3.9 (1.77)
*ACS183	2000-2500 MCM	2167-2500 MCM	1.632-1.824 (41.5)-(46.3)		3	4-3/4 (120.6)	3-1/4 (82.6)	3-5/8 (92.1)	4.3 (1.95)
*ACS185	2000-2500 MCM	2167-2500 MCM			5	4-3/4 (120.6)	3-1/4 (82.6)	3-5/8 (92.1)	4.5 (2.05)
†*ACS215	2500-3000 MCM	—	1.824-2.00 (46.3)-(50.8)		5	2-3/4 (69.9)	3 (76.2)	3-7/8 (98.4)	3.8 (1.72)
ACS225	3500	—	2.00-2.20 (50.8)-(55.88)		5	5 (127)	4 (101.6)	4-11/16 (119.1)	6.8 (3.08)

** Do not have reversible cable caps.*
† Furnished with one-piece body.

ALUMINUM

ASR

BUS SUPPORTS ALUMINUM CABLE OR TUBE TO INSULATOR

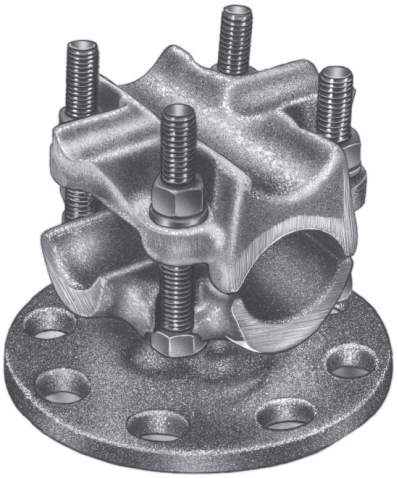

Aluminum alloy bus support for aluminum cable or tubing.

Cap screws are supplied for upright mounting.

Material: **Castings**—356-T6 aluminum alloy
Clamping hardware—aluminum alloy
Mounting hardware—galvanized steel

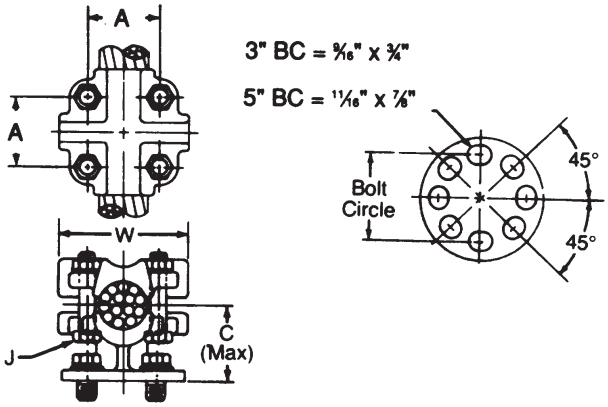

SD 2

Product Data & Conductor Size

CATALOG NUMBER	CONDUCTOR RANGE				BOLT CIRCLE DIA.	DIMENSIONS INCHES (MM)				APPROX. WT. EACH LBS. (KG)
	CABLE			TUBING IPS						
	AAC	ACSR	DIA.			A	C	W	W	
ASR2003	4/0-2000 MCM	134.6-1780 MCM	.522-1.632 (13.26-41.45)	1/4-1	3	2-1/2 (63.5)	3-1/8 (79.4)	4-1/2 (114.3)	1/2 (12.7)	4.2 (1.9)
ASR2005	4/0-2000 MCM	134.6-1780 MCM	.522-1.632 (13.26-41.45)	1/4-1	5	2-1/2 (63.5)	3-1/8 (79.4)	4-1/2 (114.3)	1/2 (12.7)	4.8 (2.18)
ASR3003	600-3000 MCM	556.5-2156 MCM	.891-1.998 (22.63-50.75)	1/2-1-1/2	3	2-3/4 (69.9)	3-1/4 (82.6)	4-3/4 (120.7)	1/2 (12.7)	4.9 (2.2)
ASR3005	600-3000 MCM	556.5-2156 MCM	.891-1.998 (22.63-50.75)	1/2-1-1/2	5	2-3/4 (69.9)	3-1/4 (82.6)	4-3/4 (120.7)	1/2 (12.7)	5.5 (2.5)

BUS SUPPORTS ALUMINUM TWO CABLES OR TUBES TO INSULATOR

ALUMINUM

ADCS

Aluminum alloy bus support for two parallel aluminum cables or tubes. Clamping bolts have hex-stops for one- wrench installation. Normally the ADCS is installed to the cap of the insulator. To install to the base of the insulator, add 'B' as a suffix.

Cap screws are supplied for upright mounting.

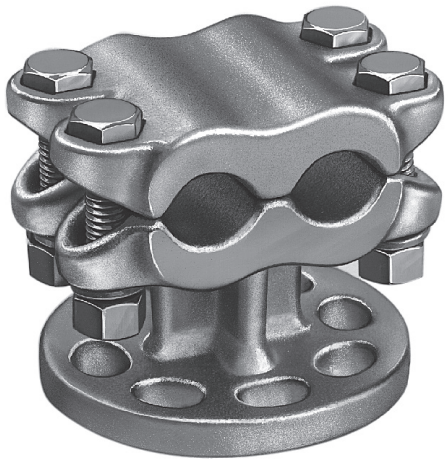

Material: **Castings**—356-T6 aluminum alloy
Clamping hardware—aluminum alloy
Mounting hardware—galvanized steel

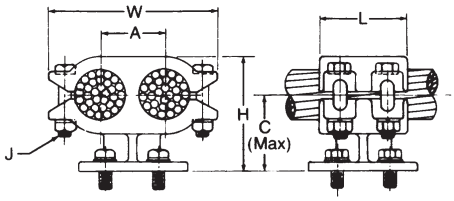

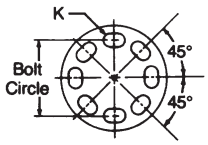

SD 3

Product Data & Conductor Size

CATALOG NUMBER	CONDUCTOR RANGE CABLE AAC	CONDUCTOR RANGE CABLE ACSR	CONDUCTOR RANGE CABLE DIA.	CONDUCTOR RANGE TUBING IPS	BOLT CIRCLE DIA.	DIMENSIONS INCHES (MM) L	H	C	W	A	J	K	APPROX. WT. EACH LBS. (KG)
ADCS503	250-556.5 MCM	159-477 MCM	.574-.875 (14.58-22.22)	3/8 -1/2	3	2-1/2 (63.5)	3-1/8 (79.4)	2-1/2 (63.5)	4 (101.6)	1-1/4 (31.75)	1/2 (12.7)	9/16 x 3/4	2.6 (1.2)
ADCS505	250-556.5 MCM	159-477 MCM	.574-.875 (14.58-22.22)	3/8 -1/2	5	2-1/2 (63.5)	3-1/8 (79.4)	2-1/2 (63.5)	4 (101.6)	1-1/4 (31.75)	1/2 (12.7)	11/16 x 7/8	2.9 (1.3)
ADCS753	550-900 MCM	556.5-795 MCM	.853-1.108 (21.67-28.14)	1/2	3	3 (76.2)	3-1/4 (82.6)	2-3/4 (69.85)	4-1/2 (114.3)	1-1/2 (38.1)	1/2 (12.7)	9/16 x 3/4	2.7 (1.2)
ADCS755	550-900 MCM	556.5-795 MCM	.853-1.108 (21.67-28.14)	1/2	5	3 (76.2)	3-1/4 (82.6)	2-3/4 (69.85)	4-9/16 (115.9)	1-1/2 (38.1)	1/2 (12.7)	11/16 x 7/8	2.8 (1.27)
ADCS1003	800-1113 MCM	795-1033.5 MCM	1.031-1.250 (26.19-31.75)	3/4-1	3	3-1/2 (88.9)	4-1/8 (104.78)	3 (76.2)	4-7/8 (123.82)	1-3/4 (44.45)	1/2 (12.7)	9/16 x 3/4	4.3 (2.0)
ADCS1005	800-1113 MCM	795-1033.5 MCM	1.031-1.250 (26.19-31.75)	3/4-1	5	3-1/2 (88.9)	4-1/4 (107.95)	3 (76.2)	4-7/8 (123.82)	1-3/4 (44.45)	1/2 (12.7)	11/16 x 7/8	4.8 (2.2)
ADCS1503	1192.5-1510.5 MCM	1113-1431 MCM	1.258-1.427 (31.95-36.24)	1	3	2-1/2 (63.5)	3-7/8 (98.42)	2-3/4 (69.85)	4-7/8 (123.82)	1-7/8 (47.62)	3/8 (9.52)	9/16 x 3/4	3.9 (1.8)
ADCS1505	1192.5-1510.5 MCM	1113-1431 MCM	1.258-1.427 (31.95-36.24)	1	5	3-1/2 (88.9)	4-3/4 (120.65)	3-3/8 (85.72)	5-1/4 (133.35)	1-7/8 (47.62)	1/2 (12.7)	11/16 x 7/8	4.9 (2.2)
ADCS2003	1300-2000 MCM	1272-1780 MCM	1.314-1.632 (33.38-41.45)	1-1/4	3	4-1/2 (114.3)	5 (127.0)	3-1/4 (82.55)	6-1/4 (158.75)	2-1/4 (57.15)	5/8 (15.88)	9/16 x 3/4	5.6 (2.6)
ADCS2005	1300-2000 MCM	1272-1780 MCM	1.314-1.632 (33.38-41.45)	1-1/4	5	4-1/2 (114.3)	5 (127.0)	3-1/4 (82.55)	6-1/4 (158.75)	2-1/4 (57.15)	5/8 (15.88)	11/16 x 7/8	6.2 (2.8)
ADCS2505	2000-2500 MCM	2034.5-2312 MCM	1.630-1.824 (41.4-46.33)	1-1/4	5	3-1/2 (88.9)	5-5/8 (142.88)	4 (101.6)	5-3/4 (146.05)	2-1/8 (53.98)	1/2 (12.7)	11/16 x 7/8	7.1 (3.2)
ADCS3005	3000 MCM	—	1.998 (50.75)	1-1/2	5	3-3/8 (92.08)	5 (127.0)	3-1/4 (82.55)	7 (177.8)	2-1/2 (63.5)	5/8 (15.88)	11/16 x 7/8	8.0 (3.6)

BUS SUPPORTS
ALUMINUM TUBE TO INSULATOR

ALUMINUM
AUR

Aluminum alloy bus support for aluminum tubing. Caps may be rotated to provide slip-free or rigid clamping. Stainless steel static eliminator springs are standard. Clamping bolts have hex-stops for one-wrench installation.

Cap screws are supplied for upright mounting.

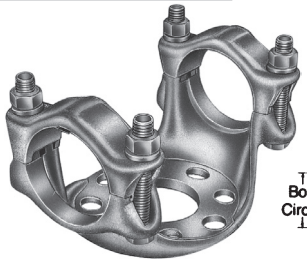

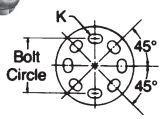

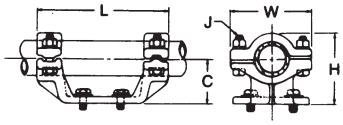

Material: **Castings**—356-T6 aluminum alloy
Clamping hardware—aluminum alloy
Mounting hardware—galvanized steel

Product Data & Conductor Size

CATALOG NUMBER	CONDUCTOR SIZE IPS/EHIPS	BOLT CIRCLE DIA.	DIMENSIONS INCHES (MM)						APPROX. WT. EACH LBS. (KG)
			L	H	C	W	J	K	
AUR063	3/4	3	7-3/8 (187.32)	2-7/8 (73.02)	2 (50.8)	3-3/8 (85.72)	3/8 (9.52)	9/16 x 3/4	2.2 (1.0)
AUR065	3/4	5	9-3/8 (238.12)	3-1/8 (79.38)	2-1/4 (57.15)	3-3/8 (85.72)	1/2 (12.7)	11/16 x 7/8	3.1 (1.4)
AUR103	1	3	7-3/8 (187.32)	3 (76.2)	2 (50.8)	3-5/8 (92.08)	1/2 (12.7)	9/16 x 3/4	2.4 (1.1)
AUR105	1	5	9-3/8 (238.12)	3-1/4 (82.55)	2-1/4 (57.15)	3-5/8 (92.08)	1/2 (12.7)	11/16 x 7/8	3.2 (1.4)
AUR123	1-1/4	3	7-3/8 (187.32)	3-1/2 (88.9)	2-1/4 (57.15)	4 (101.6)	1/2 (12.7)	9/16 x 3/4	2.6 (1.2)
AUR125	1-1/4	5	9-3/8 (238.12)	2 (50.8)	2-3/8 (60.32)	4 (101.6)	1/2 (12.7)	11/16 x 7/8	3.2 (1.5)
AUR143	1-1/2	3	7-3/8 (187.32)	3-7/8 (98.42)	2-1/2 (63.5)	4-1/8 (104.78)	1/2 (12.7)	9/16 x 3/4	3.3 (1.5)
AUR145	1-1/2	5	9-3/8 (238.12)	4 (101.6)	2-1/2 (63.5)	4-1/8 (104.78)	1/2 (12.7)	11/16 x 7/8	3.4 (1.5)
AUR203	2	3	7-1/2 (190.5)	4-3/8 (111.12)	2-3/4 (69.85)	4-3/4 (120.65)	1/2 (12.7)	9/16 x 3/4	3.2 (1.4)
AUR205	2	5	9-1/2 (241.3)	4-3/8 (111.12)	2-3/4 (69.85)	4-3/4 (120.65)	1/2 (12.7)	11/16 x 7/8	4.4 (2.0)
AUR243	2-1/2	3	8-1/4 (209.55)	5 (127.0)	3-1/8 (79.38)	5-5/8 (142.88)	1/2 (12.7)	9/16 x 3/4	3.9 (1.8)
AUR245	2-1/2	5	10-1/4 (260.35)	5-1/8 (130.18)	3-1/8 (79.38)	5-5/8 (142.88)	1/2 (12.7)	11/16 x 7/8	5.6 (2.5)
AUR303	3	3	8-3/8 (212.72)	5-7/8 (149.22)	3-5/8 (92.08)	6-1/4 (158.75)	5/8 (15.88)	9/16 x 3/4	5.2 (2.4)
AUR305	3	5	10 (254.0)	6 (152.4)	3-5/8 (92.08)	6-1/4 (158.75)	5/8 (15.88)	11/16 x 7/8	5.9 (2.7)
AUR343	3-1/2	3	8-3/8 (212.72)	6-1/2 (165.1)	4 (101.6)	6-7/8 (174.62)	5/8 (15.88)	9/16 x 3/4	5.8 (2.6)
AUR345	3-1/2	5	10-3/8 (263.52)	6-7/8 (174.62)	4 (101.6)	6-7/8 (174.62)	5/8 (15.88)	11/16 x 7/8	6.2 (2.8)
AUR403	4	3	8-1/4 (209.55)	7-1/4 (184.15)	4-1/2 (114.3)	7-3/8 (187.32)	5/8 (15.88)	9/16 x 3/4	6.4 (2.9)
AUR405	4	5	10-1/4 (260.35)	7-1/4 (184.15)	4-1/2 (114.3)	7-3/8 (187.32)	5/8 (15.88)	11/16 x 7/8	7.4 (3.3)
AUR503	5	3	10 (254.0)	8-1/4 (209.550	4-7/8 (123.82)	8-1/4 (209.55)	5/8 (15.88)	9/16 x 3/4	8.1 (3.7)
AUR505	5	5	10-5/8 (269.88)	8-1/4 (209.550	4-7/8 (123.82)	8-1/4 (209.55)	5/8 (15.88)	11/16 x 7/8	9.5 (4.3)
AUR603	6	3	9-3/8 (238.12)	9-1/4 (234.95)	5-3/8 (136.52)	9-3/8 (238.12)	5/8 (15.88)	9/16 x 3/4	9.8 (4.4)
AUR605	6	5	11-1/2 (292.1)	9-1/4 (234.95)	5-3/8 (136.52)	9-3/8 (238.12)	5/8 (15.88)	11/16 x 7/8	10.9 (4.9)

BUS SUPPORTS ALUMINUM TUBE TO INSULATOR

ALUMINUM
ATSF

Aluminum alloy, slip fit bus support for aluminum tubing. The adjustable base slots permit rotation up to 90 degrees for alignment.

Cap screws are supplied for upright mounting.

Material: **Castings**—356-T6 aluminum alloy
Mounting hardware—galvanized steel

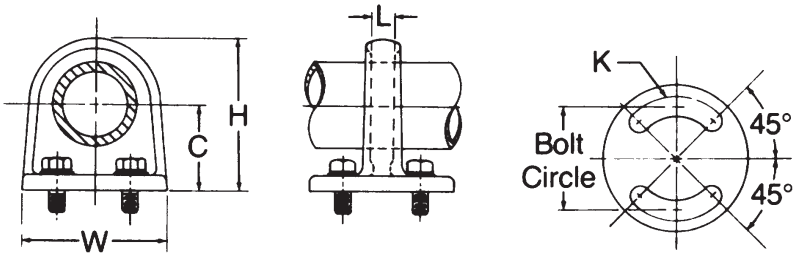

Product Data & Conductor Size

CATALOG NUMBER	CONDUCTOR SIZE IPS/EHIPS	BOLT CIRCLE DIA.	DIMENSIONS INCHES (MM)					APPROX. WT. EACH LBS. (KG)
			L	H	C	W	K	
ATSF103	1	3	1/2 (12.7)	3-3/8 (85.72)	2 (50.8)	4-1/4 (107.95)	9/16	1.5 (.68)
ATSF105	1	5	1/2 (12.7)	3-1/2 (88.9)	2-1/4 (57.15)	6-1/4 (158.75)	11/16	1.7 (.77)
ATSF143	1-1/2	3	1/2 (12.7)	4-1/8 (104.78)	2-1/2 (63.5)	4-1/4 (107.95)	9/16	1.7 (.77)
ATSF145	1-1/2	5	1/2 (12.7)	4-1/8 (104.78)	2-1/2 (63.5)	6-1/4 (158.75)	11/16	2.3 (1.0)
ATSF203	2	3	5/8 (15.88)	4-5/8 (117.48)	2-3/4 (69.85)	4-1/4 (107.95)	9/16	1.9 (.86)
ATSF205	2	5	5/8 (15.88)	4-5/8 (117.48)	2-3/4 (69.85)	6-1/4 (158.75)	11/16	2.8 (1.3)
ATSF243	2-1/2	3	3/4 (19.05)	5-3/8 (136.52)	3-1/8 (79.38)	4-1/4 (107.95)	9/16	2.2 (1.0)
ATSF245	2-1/2	5	3/4 (19.05)	5-3/8 (136.52)	3-1/8 (79.38)	6-1/4 (158.75)	11/16	3.5 (1.6)
ATSF303	3	3	1 (25.4)	6-1/4 (158.75)	3-5/8 (92.08)	4-1/4 (107.95)	9/16	3.2 (1.5)
ATSF305	3	5	1 (25.4)	6-1/8 (155.58)	3-5/8 (92.08)	6-1/4 (158.75)	11/16	3.7 (1.7)
ATSF343	3-1/2	3	1 (25.4)	7-1/8 (180.98)	4 (101.6)	4-1/4 (107.95)	9/16	3.9 (1.8)
ATSF345	3-1/2	5	1 (25.4)	6-7/8 (174.62)	4 (101.6)	6-1/4 (158.75)	11/16	4.3 (1.9)
ATSF403	4	3	1-1/8 (28.58)	7-5/8 (193.68)	4-1/2 (114.3)	4-1/4 (107.95)	9/16	4.1 (1.9)
ATSF405	4	5	1-1/8 (28.58)	7-5/8 (193.68)	4-1/2 (114.3)	6-1/4 (158.75)	11/16	4.6 (2.1)
ATSF505	5	5	1-1/8 (28.58)	8-3/4 (222.25)	4-7/8 (123.83)	6-1/4 (158.75)	11/16	5.3 (2.4)
ATSF605	6	5	1-1/8 (28.58)	9-5/8 (244.48	5-3/8 (136.53)	6-1/4 (158.75)	11/16	6.1 (2.8)

ALUMINUM

AURC

BUS SUPPORTS ALUMINUM TUBE TO INSULATOR (COUPLER)

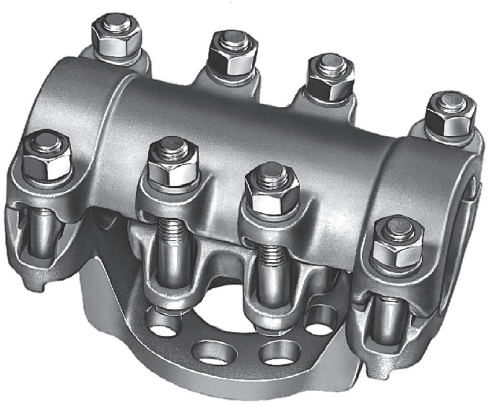

Aluminum alloy, rigid clamping bus support-coupler for aluminum tubing. Clamping bolts have hex-stops for onewrench installation.

Cap screws are supplied for upright mounting.

Material: **Castings**—356-T6 aluminum alloy
Clamping hardware—aluminum alloy
Mounting hardware—galvanized steel

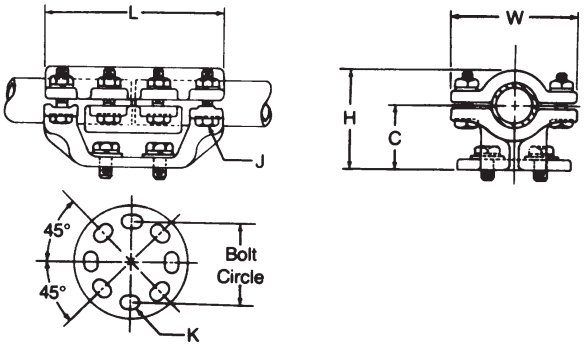

SD 6

Product Data & Conductor Size

CATALOG NUMBER	CONDUCTOR SIZE IPS/EHIPS	BOLT CIRCLE DIA.	DIMENSIONS INCHES (MM)						APPROX. WT. EACH LBS. (KG)
			L	C	H	W	J	K	
AURC143	1-1/2	3	7-3/8 (187.32)	2-1/2 (63.5)	3-7/8 (98.42)	4-1/8 (104.78)	1/2 (12.7)	9/16 x 3/4	4.9 (2.2)
AURC145	1-1/2	5	9-3/8 (238.12)	2-1/2 (63.5)	4 (101.6)	4-1/8 (104.78)	1/2 (12.7)	11/16 x 7/8	5.2 (2.4)
AURC203	2	3	7-1/2 (190.5)	2-3/4 (69.85)	4-3/8 (111.12)	4-3/4 (120.65)	1/2 (12.7)	9/16 x 3/4	5.1 (2.3)
AURC205	2	5	9-1/2 (241.3)	2-3/4 (69.85)	4-3/8 (111.12)	4-3/4 (120.65)	1/2 (12.7)	11/16 x 7/8	6.2 (2.8)
AURC243	2-1/2	3	8-1/4 (209.55)	3-1/8 (79.38)	5 (127.0)	5-5/8 (142.88)	1/2 (12.7)	9/16 x 3/4	6.6 (3.0)
AURC245	2-1/2	5	10-1/4 (260.35)	3-1/8 (79.38)	5-1/8 (130.18)	5-5/8 (142.88)	5/8 (15.88)	11/16 x 7/8	7.5 (3.4)
AURC303	3	3	8-3/8 (212.72)	3-5/8 (92.08)	5-7/8 (149.22)	6-1/4 (158.75)	5/8 (15.88)	9/16 x 3/4	9.0 (4.1)
AURC305	3	5	10 (254.0)	3-5/8 (92.08)	6 (152.4)	6-1/4 (158.75)	5/8 (15.88)	11/16 x 7/8	10.1 (4.6)
AURC343	3-1/2	3	8-3/8 (212.72)	4 (101.6)	6-1/2 (165.1)	6-7/8 (174.62)	5/8 (15.88)	9/16 x 3/4	9.6 (4.4)
AURC345	3-1/2	5	10-3/8 (263.52)	4 (101.6)	6-7/8 (174.62)	6-7/8 (174.62)	5/8 (15.88)	11/16 x 7/8	10.4 (4.7)
AURC403	4	3	8-1/4 (209.55)	4-1/2 (114.3)	7-1/4 (184.15)	7-3/8 (187.32)	5/8 (15.88)	9/16 x 3/4	10.8 (4.9)
AURC405	4	5	10-1/4 (260.35)	4-1/2 (114.3)	7-1/4 (184.15)	7-3/8 (187.32)	5/8 (15.88)	11/16 x 7/8	12.5 (5.7)

BUS SUPPORTS ALUMINUM VERTICAL TUBE TO INSULATOR

ALUMINUM

AUDE

Aluminum alloy bus support for vertical deadending aluminum tubing. Clamping bolts have hex-stops for one-wrench installation.

Cap screws are supplied for upright mounting.

Material: **Castings**—356-T6 aluminum alloy
Clamping hardware—aluminum alloy
Mounting hardware—galvanized steel

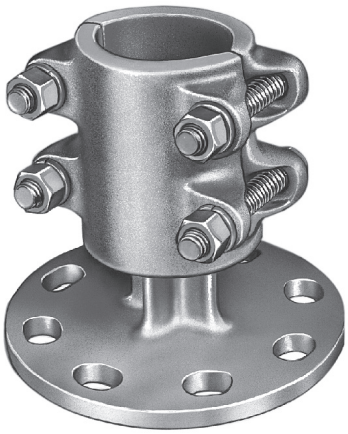

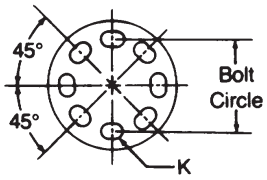

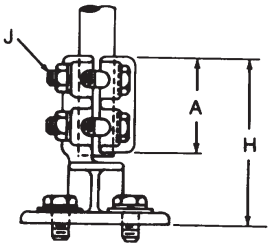

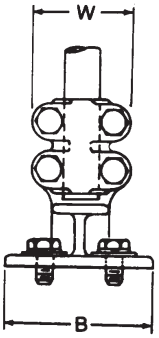

SD 7

Product Data & Conductor Size

CATALOG NUMBER	CONDUCTOR SIZE IPS/EHIPS	BOLT CIRCLE DIA.	DIMENSIONS INCHES (MM)						APPROX. WT. EACH LBS. (KG)
			H	A	W	B	J	K	
AUDE103	1	3	5-1/8 (130.18)	2-3/4 (69.85)	3-1/4 (82.55)	4-1/4 (107.95)	1/2 (12.7)	9/16 x 3/4	2.3 (1.0)
AUDE105	1	5	5-1/8 (130.18)	2-3/4 (69.85)	3-1/4 (82.55)	6-1/4 (158.75)	1/2 (12.7)	11/16 x 7/8	2.8 (1.3)
AUDE123	1-1/4	3	5-1/2 (139.7)	3 (76.2)	3-5/8 (92.08)	4-1/4 (107.95)	1/2 (12.7)	9/16 x 3/4	2.7 (1.2)
AUDE125	1-1/4	5	5-1/2 (139.7)	3 (76.2)	3-5/8 (92.08)	6-1/4 (158.75)	1/2 (12.7)	11/16 x 7/8	3.2 (1.5)
AUDE143	1-1/2	3	5-3/4 (146.05)	3-1/4 (82.55)	3-7/8 (98.42)	4-1/4 (107.95)	1/2 (12.7)	9/16 x 3/4	3.1 (1.4)
AUDE145	1-1/2	5	5-3/4 (146.05)	3-1/4 (82.55)	3-7/8 (98.42)	6-1/4 (158.75)	1/2 (12.7)	11/16 x 7/8	3.6 (1.6)
AUDE203	2	3	5-7/8 (149.22)	3-1/2 (88.9)	4-3/8 (111.12)	4-1/4 (107.95)	1/2 (12.7)	9/16 x 3/4	3.2 (1.5)
AUDE205	2	5	5-7/8 (149.22)	3-1/2 (88.9)	4-3/8 (111.12)	6-1/4 (158.75)	1/2 (12.7)	11/16 x 7/8	3.9 (1.8)
AUDE243	2-1/2	3	6-5/8 (168.28)	3-3/4 (95.25)	5-1/4 (133.35)	4-1/4 (107.95)	5/8 (15.88)	9/16 x 3/4	4.0 (1.8)
AUDE245	2-1/2	5	6-5/8 (168.28)	3-3/4 (95.25)	5-1/4 (133.35)	6-1/4 (158.75)	5/8 (15.88)	11/16 x 7/8	4.6 (2.1)
AUDE303	3	3	6-5/8 (168.28)	(101.6)	5-7/8 (149.22)	4-1/4 (107.95)	5/8 (15.88)	9/16 x 3/4	5.3 (2.4)
AUDE305	3	5	6-5/8 (168.28)	(101.6)	5-7/8 (149.22)	6-1/4 (158.75)	5/8 (15.88)	11/16 x 7/8	5.8 (2.6)
AUDE403	4	3	6-3/4 (171.45)	4-1/4 (107.95)	7 (177.8)	4-1/4 (107.95)	5/8 (15.88)	9/16 x 3/4	6.3 (2.9)
AUDE405	4	5	6-5/8 (168.28)	4-1/4 (107.95)	7 (177.8)	6-1/4 (158.75)	5/8 (15.88)	11/16 x 7/8	7.0 (3.2)

ALUMINUM

AURF

BUS SUPPORTS ALUMINUM EXPANSION TUBE TO INSULATOR

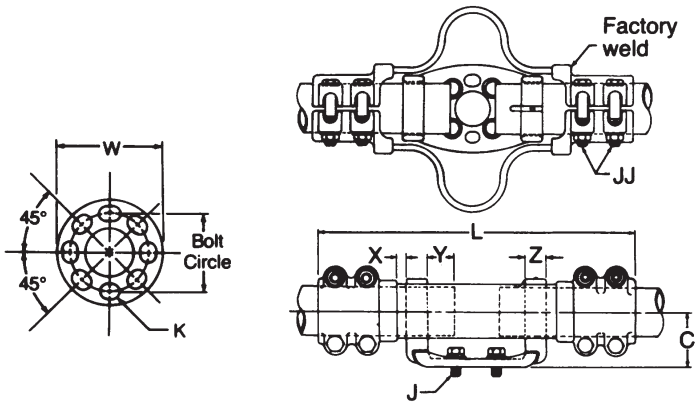

Aluminum alloy expansion bus support for aluminum tubing. Clamping bolts have hex-stops for one-wrench installation.

Cap screws are supplied for upright mounting. Contact sealant is recommended.

Material: **Castings**—356-T6 aluminum alloy
Factory formed laminated shunt—aluminum
Clamping hardware—aluminum alloy
Mounting hardware—galvanized steel

Note: To specify extra heavy (schedule 80 EHIPS) tubing, add "H" to catalog number; Example: AURFH405.

Refer to chart DC-6536 on page SD-9 for installation instructions.

Product Data & Conductor Size

CATALOG NUMBER	CONDUCTOR SIZE IPS/EHIPS	BOLT CIRCLE DIA.	DIMENSIONS INCHES (MM)							APPROX. WT. EACH LBS. (KG)
			L	C	W	Z	J	JJ	K	
AURF203	2	3◊	16-7/8 (428.62)	2-3/4 (69.85)	4-1/4 (107.95)	3/4 (19.05)	1/2 (12.7)	1/2 (12.7)	9/16 x 3/4	11.0 (5.0)
AURF205	2	5◊◊	19-7/8 (504.82)	2-3/4 (69.85)	6-1/4 (158.75)	3/4 (19.05)	5/8 (15.88)	1/2 (12.7)	11/16 x 7/8	11.8 (5.4)
AURF243	2-1/2	3◊	17-1/2 (444.5)	3-1/8 (79.38)	4-1/4 (107.95)	3/4 (19.05)	1/2 (12.7)	5/8 (15.88)	9/16 x 3/4	12.8 (5.8)
AURF245	2-1/2	5◊◊	20-5/8 (523.88)	3-1/8 (79.38)	6-1/4 (158.75)	3/4 (19.05)	5/8 (15.88)	5/8 (15.88)	11/16 x 7/8	13.7 (6.2)
AURF303	3	3◊	17-3/4 (450.85)	3-5/8 (92.08)	4-1/4 (107.95)	13/16 (20.64)	1/2 (12.7)	5/8 (15.88)	9/16 x 3/4	15.2 (6.9)
AURF305	3	5◊◊	20-7/8 (530.22)	1/2 (101.6)	6-1/4 (158.75)	13/16 (20.64)	5/8 (15.88)	5/8 (15.88)	11/16 x 7/8	16.3 (7.4)
AURF343	3-1/2	3◊	18-1/4 (463.55)	4 (101.6)	1/2-1/4 (107.95)	1 (25.4)	1/2 (12.7)	5/8 (15.88)	9/16 x 3/4	23.7 (10.8)
AURF345	3-1/2	5◊◊	21-3/8 (542.92)	4-1/2 (114.3)	6-1/4 (158.75)	1 (25.4)	5/8 (15.88)	5/8 (15.88)	11/16 x 7/8	25.3 (11.5)
AURF403	4	3◊	18-1/4 (463.55)	4-1/2 (114.3)	4-1/4 (107.95)	1 (25.4)	1/2 (12.7)	5/8 (15.88)	9/16 x 3/4	24.8 (11.3)
AURF405	4	5◊◊	21-5/8 (549.28)	4 (101.6)	6-1/4 (158.75)	1-1/4 (31.75)	5/8 (15.88)	5/8 (15.88)	11/16 x 7/8	24.6 (11.2)
AURF505	5	5◊◊	23-5/8 (600.08)	4-7/8 (123.82)	6-1/4 (158.75)	1-1/4 (31.75)	5/8 (15.88)	5/8 (15.88)	11/16 x 7/8	25.8 (11.7)
AURF605	6	5◊◊	26-1/8 (663.58)	5-3/8 (136.52)	6-1/4 (158.75)	1-1/2 (38.1)	5/8 (15.88)	5/8 (15.88)	11/16 x 7/8	26.3 (11.9)

Designed for: ◊ 3 1-1/8" expansion, 80 ft. total maximum bus length (both sides), ◊◊ 3 2-1/8" expansion, 160 ft. total maximum bus length (both sides).

INSTALLATION CHART
DC-6536

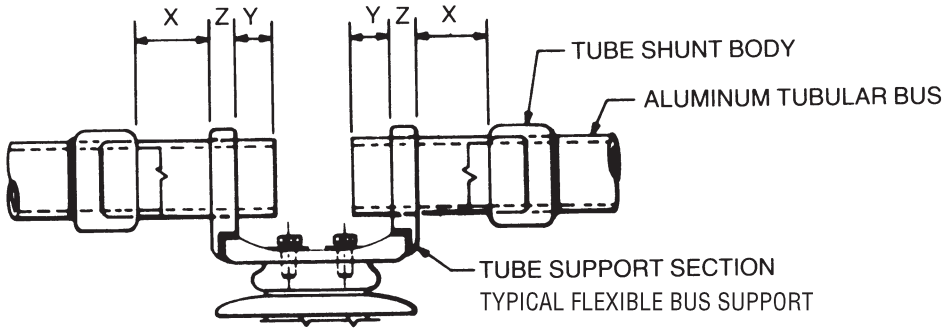

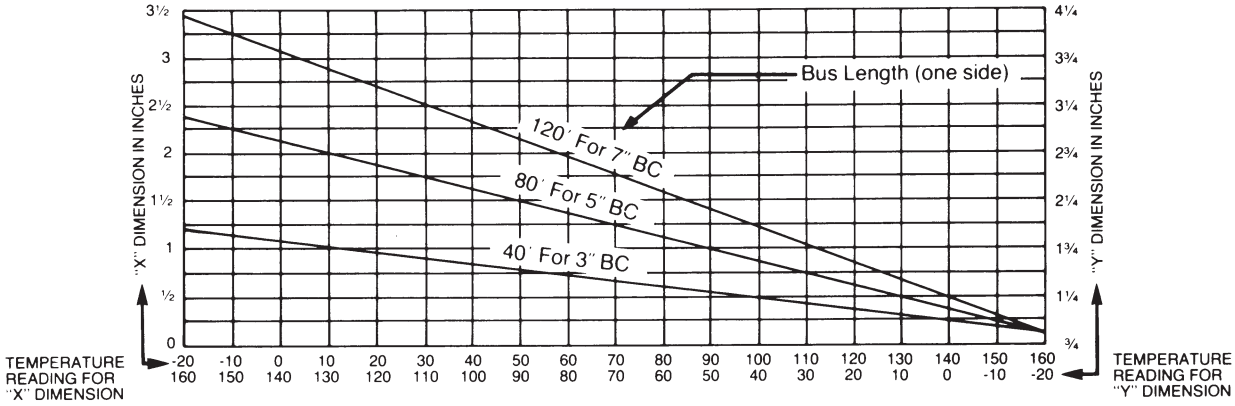

HOW TO USE CHART

1. Determine tubular bus temperature and locate this temperature on the "Temperature Reading for 'X' Dimension" scale.
2. Locate the intersection of the given bus length and the temperature reading.
3. Read "X" dimension setting from this intersection point.
4. Determine "Y" dimension in a similar manner.
5. Determine "Z" dimension from applicable ANDERSON connector assembly. The location of the tube-shunt body from the end of the tube may be determined by adding X + Y + Z.
6. Repeat this procedure for the tubular bus on the other side of the connector.
7. Do not exceed given bus length for each particular bolt circle.

BRONZE

ICA

BUS SUPPORTS BRONZE CABLE OR TUBE TO INSULATOR

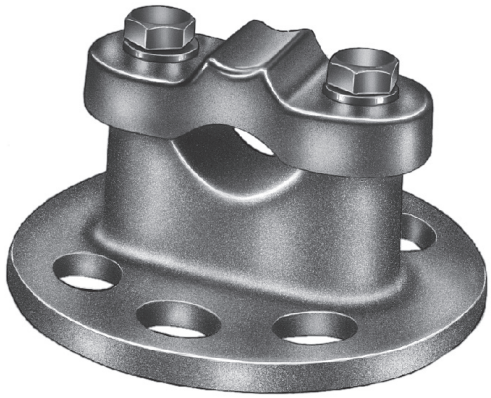

Bronze alloy bus support for copper cable or tubing.

Cap screws are supplied for upright mounting.

Material: **Castings**—bronze alloy
Clamping hardware—silicon bronze or stainless steel
Mounting hardware—galvanized steel

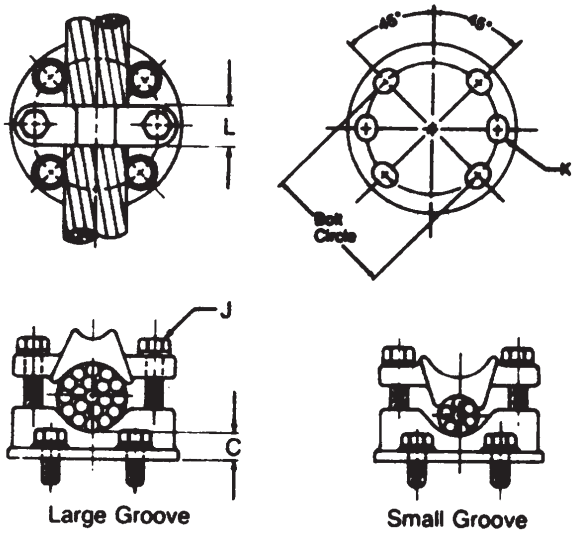

Product Data & Conductor Size

CATALOG NUMBER	COPPER CONDUCTOR RANGE			BOLT CIRCLE DIA.	DIMENSIONS INCHES (MM)				APPROX. WT. EACH LBS. (KG)
	CABLE	CABLE DIA.	TUBING IPS		L	C	J	K	
ICA0253	#8 — 250 MCM	.128- .575 (3.25- 14.60)	1/8-1/4	3	1 (25.4)	5/8 (15.88)	3/8 (9.52)	9/16 x 3/4	2.0 (.91)
ICA0255	#8 — 250 MCM	.128- .575 (3.25- 14.60)	1/8-1/4	5	1 (25.4)	1-1/8 (28.58)	3/8 (9.52)	11/16 x 7/8	3.8 (1.72)
ICA1003	4/0 — 1000 MCM	.460- 1.152 (11.68- 29.26)	1/4-3/4	3	1 (25.4)	1 (25.4)	3/8 (9.52)	9/16 x 3/4	2.5 (1.13)
ICA1005	4/0 — 1000 MCM	.460- 1.152 (11.68- 29.26)	1/4-3/4	5	1 (25.4)	1 (25.4)	3/8 (9.52)	11/16 x 7/8	4.7 (2.13)
ICA2003	500 — 2000 MCM	.811- 1.632 (20.60- 41.45)	1/2-1-1/4	3	1 (25.4)	1 (25.4)	1/2 (12.7)	9/16 x 3/4	2.9 (1.32)
ICA2005	500 — 2000 MCM	.811- 1.632 (20.60- 41.45)	1/2-1-1/4	5	1-1/4 (31.75)	1 (25.4)	1/2 (12.7)	11/16 x 7/8	4.5 (2.04)
ICA3003	1000 — 3000 MCM	1.152- 1.998 (29.26- 50.75)	1-2	3	1-1/4 (31.75)	1-1/4 (31.75)	1/2 (12.7)	9/16 x 3/4	3.4 (1.54)
ICA3005	1000 — 3000 MCM	1.152- 1.998 (29.26- 50.75)	1-2	5	1-1/4 (31.75)	1-1/4 (31.75)	1/2 (12.7)	11/16 x 7/8	5.4 (2.45)

BUS SUPPORTS
BRONZE
CABLE OR TUBE TO INSULATOR

BRONZE
CSSB

Heavy duty, bronze alloy bus support for copper cable or tubing.

Cap screws are supplied for upright mounting.

Material: **Castings**—bronze alloy
Clamping hardware—silicon bronze or stainless steel
Mounting hardware—galvanized steel

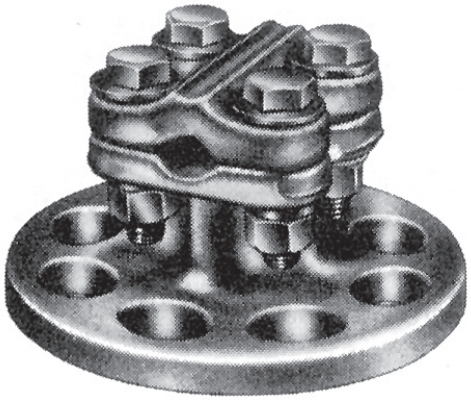

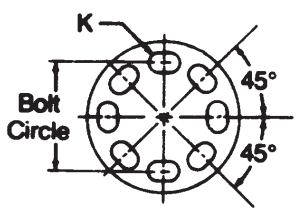

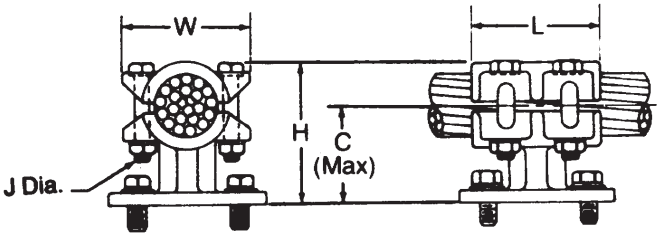

Product Data & Conductor Size

CATALOG NUMBER	COPPER CONDUCTOR RANGE			BOLT CIRCLE DIA.	DIMENSIONS INCHES (MM)						APPROX. WT. EACH LBS. (KG)
	CABLE	CABLE DIA.	TUBING IPS		L	H	C	W	J	K	
CSSB403	#8 — 4/0 Str.	.128- .528 (3.25- 13.41)	1/4	3	2-1/4 (57.15)	2-1/2 (63.5)	1-3/4 (44.45)	2-1/4 (57.15)	3/8 (9.52)	9/16 x 3/4	1.2 (.54)
CSSB405	#8 — 4/0 Str.	.128- .528 (3.25- 13.41)	1/4	5	2-1/4 (57.15)	2-1/2 (63.5)	1-3/4 (44.45)	2-1/4 (57.15)	3/8 (9.52)	11/16 x 7/8	3.0 (1.36)
CSSB503	250 — 500 MCM	.574- .813 (14.58- 20.65)	3/8 -1/2	3	2-1/4 (57.15)	2-7/8 (73.02)	2 (50.8)	2-1/4 (57.15)	3/8 (9.52)	9/16 x 3/4	1.8 (.82)
CSSB505	250 — 500 MCM	.574- .813 (14.58- 20.65)	3/8 -1/2	5	2-1/4 (57.15)	2-7/8 (73.02)	2 (50.8)	2-1/4 (57.15)	3/8 (9.52)	11/16 x 7/8	3.3 (1.50)
CSSB753	550 — 750 MCM	.853- .998 (21.67- 25.35)	1/2	3	2-1/2 (63.5)	3 (76.2)	2-1/8 (53.98)	2-5/8 (66.68)	3/8 (9.52)	9/16 x 3/4	2.9 (1.32)
CSSB755	550 — 750 MCM	.853- .998 (21.67- 25.35)	1/2	5	2-1/2 (63.5)	3 (76.2)	2-1/8 (53.98)	2-5/8 (66.68)	3/8 (9.52)	11/16 x 7/8	3.8 (1.72)
CSSB1003	800 — 1000 MCM	1.031- 1.152 (26.19- 29.26)	3/4	3	2-1/2 (63.5)	3-3/8 (85.72)	2-3/8 (60.32)	2-3/4 (69.85)	3/8 (9.52)	9/16 x 3/4	4.1 (1.86)
CSSB1005	800 — 1000 MCM	1.031- 1.152 (26.19- 29.26)	3/4	5	2-1/2 (63.5)	3-3/8 (85.72)	2-3/8 (60.32)	2-3/4 (69.85)	3/8 (9.52)	11/16 x 7/8	6.1 (2.77)
CSSB1503	1250 — 1500 MCM	1.288- 1.412 (32.72- 35.86)	1	3	2-1/2 (63.5)	3-3/4 (95.25)	2-5/8 (66.68)	2-7/8 (73.02)	3/8 (9.52)	9/16 x 3/4	6.4 (2.90)
CSSB1505	1250 — 1500 MCM	1.288- 1.412 (32.72- 35.86)	1	5	2-1/2 (63.5)	3-3/4 (95.25)	2-5/8 (66.68)	2-7/8 (73.02)	3/8 (9.52)	11/16 x 7/8	6.7 (3.04)
CSSB2003	1500 — 2000 MCM	1.411- 1.632 (35.84- 41.45)	1	3	2-1/2 (63.5)	4 (101.6)	2-3/4 (69.85)	3 (76.2)	3/8 (9.52)	9/16 x 3/4	4.7 (2.13)
CSSB2005	1500 — 2000 MCM	1.411- 1.632 (35.84- 41.45)	1	5	2-1/2 (63.5)	4 (101.6)	2-3/4 (69.85)	3 (76.2)	3/8 (9.52)	11/16 x 7/8	6.7 (3.04)
CSSB2503	2000 — 2500 MCM	1.630- 1.824 (41.40- 46.33)	1-1/4	3	2-1/2 (63.5)	4-1/4 (107.95)	2-7/8 (73.02)	3-3/8 (85.72)	3/8 (9.52)	9/16 x 3/4	4.7 (2.13)
CSSB2505	2000 — 2500 MCM	1.630- 1.824 (41.40- 46.33)	1-1/4	5	2-1/2 (63.5)	4-1/4 (107.95)	2-7/8 (73.02)	3-3/8 (85.72)	3/8 (9.52)	11/16 x 7/8	6.5 (2.95)

BRONZE

CDSB

BUS SUPPORTS BRONZE TWO CABLES OR TUBES TO INSULATOR

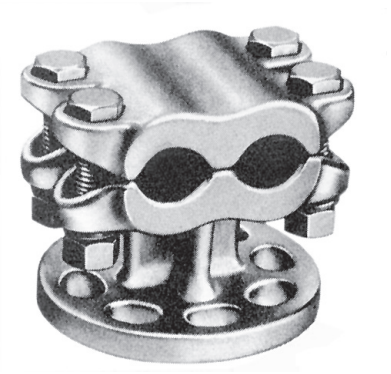

Heavy duty, bronze alloy bus support for two copper cables or tubes.

Cap screws are supplied for upright mounting.

Material: **Castings**—bronze alloy
Clamping hardware—silicon bronze or stainless steel
Mounting hardware—galvanized steel

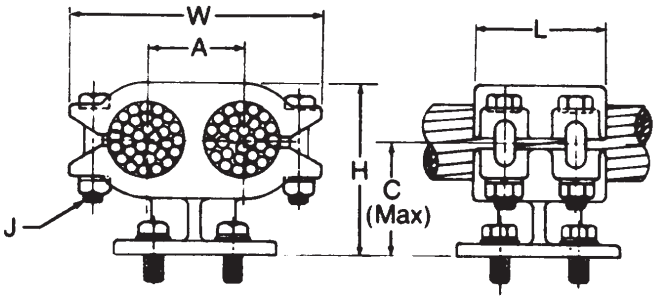

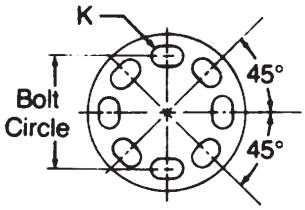

SD 12

Product Data & Conductor Size

CATALOG NUMBER	COPPER CONDUCTOR RANGE		BOLT CIRCLE DIA.	DIMENSIONS INCHES (MM)							APPROX. WT. EACH LBS. (KG)
	CABLE	TUBING IPS		L	H	C	W	A	J	K	
CDSB403	#8 — 4/0 Str.	1/8--1/4	3	2-1/4 (57.15)	3-1/4 (82.55)	2-1/4 (57.15)	3-3/4 (95.25)	1 (25.4)	3/8 (9.52)	9/16 x 3/4	4.6 (2.09)
CDSB405	#8 — 4/0 Str.	1/8--1/4	5	2-1/4 (57.15)	3-1/4 (82.55)	2-1/4 (57.15)	3-3/4 (95.25)	1 (25.4)	3/8 (9.52)	11/16 x 7/8	5.0 (2.27)
CDSB503	250 — 500 MCM	3/8 -1/2	3	2-1/4 (57.15)	3-1/4 (82.55)	2-3/8 (60.32)	3-5/8 (92.08)	1-1/4 (31.75)	3/8 (9.52)	9/16 x 3/4	4.0 (1.81)
CDSB505	250 — 500 MCM	3/8 -1/2	5	2-1/4 (57.15)	3-1/4 (82.55)	2-3/8 (60.32)	3-5/8 (92.08)	1-1/4 (31.75)	3/8 (9.52)	11/16 x 7/8	5.8 (2.63)
CDSB753	550 — 750 MCM	1/2	3	3 (76.2)	3-7/8 (98.42)	2-3/4 (69.85)	4-1/2 (114.3)	1-1/2 (38.1)	1/2 (12.7)	9/16 x 3/4	7.8 (3.54)
CDSB755	550 — 750 MCM	1/2	5	3 (76.2)	3-7/8 (98.42)	2-3/4 (69.85)	4-1/2 (114.3)	1-1/2 (38.1)	1/2 (12.7)	11/16 x 7/8	10.3 (4.67)
CDSB1003	800 — 1000 MCM	3/4	3	2-1/2 (63.5)	3-5/8 (92.08)	2-5/8 (66.68)	4-1/2 (114.3)	1-3/4 (44.45)	3/8 (9.52)	9/16 x 3/4	5.1 (2.31)
CDSB1005	800 — 1000 MCM	3/4	5	2-1/2 (63.5)	3-5/8 (92.08)	2-5/8 (66.68)	4-1/2 (114.3)	1-3/4 (44.45)	3/8 (9.52)	11/16 x 7/8	7.2 (3.26)
CDSB1503	1250 — 1500 MCM	1	3	2-1/2 (63.5)	3-7/8 (98.42)	2-3/4 (69.85)	4-7/8 (123.82)	1-7/8 (47.62)	3/8 (9.52)	9/16 x 3/4	5.1 (2.31)
CDSB1505	1250 — 1500 MCM	1	5	2-1/2 (63.5)	3-7/8 (98.42)	2-3/4 (69.85)	4-7/8 (123.82)	1-7/8 (47.62)	3/8 (9.52)	11/16 x 7/8	7.1 (3.22)

BUS SUPPORTS BRONZE TUBE TO INSULATOR

BRONZE
UP

Bronze alloy bus support for copper tubing. Slip-free or rigid clamping can be obtained by rotating cap 180 degrees. Static eliminator springs are standard.

Cap screws are supplied for upright mounting.

Material: **Castings**—bronze alloy
Clamping hardware—silicon bronze or stainless steel
Mounting hardware—galvanized steel
Spring—stainless steel

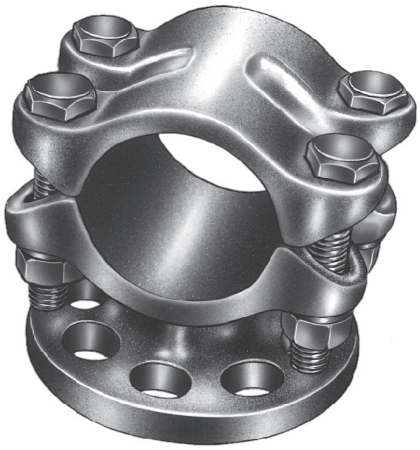

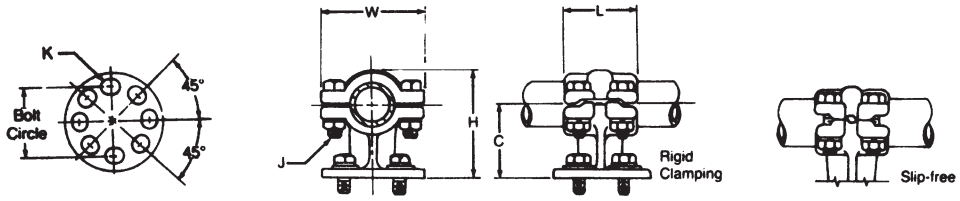

Product Data & Conductor Size

CATALOG NUMBER	CONDUCTOR SIZE IPS	BOLT CIRCLE DIA.	DIMENSIONS INCHES (MM)						APPROX. WT. EACH LBS. (KG)
			L	H	C	W	J	K	
UP063	3/4	3	2 (50.8)	2-7/8 (73.02)	2 (50.8)	3 (76.2)	3/8 (9.52)	9/16 x 3/4	3.7 (1.68)
UP065	3/4	5	2 (50.8)	3-1/8 (79.38)	2-1/4 (57.15)	3 (76.2)	3/8 (9.52)	11/16 x 7/8	6.3 (2.86)
UP103	1	3	2 (50.8)	3 (76.2)	2 (50.8)	3-1/4 (82.55)	3/8 (9.52)	9/16 x 3/4	3.8 (1.72)
UP105	1	5	2 (50.8)	3-1/4 (82.55)	2-1/4 (57.15)	3-1/4 (82.55)	3/8 (9.52)	11/16 x 7/8	6.4 (2.90)
UP123	1-1/4	3	2-3/4 (69.85)	3-1/2 (88.9)	2-1/4 (57.15)	4 (101.6)	1/2 (12.7)	9/16 x 3/4	5.4 (2.45)
UP125	1-1/4	5	2-3/4 (69.85)	3-5/8 (92.08)	2-3/8 (60.32)	4 (101.6)	1/2 (12.7)	11/16 x 7/8	7.9 (3.58)
UP143	1-1/2	3	3 (76.2)	4 (101.6)	2-1/2 (63.5)	4-1/4 (107.95)	1/2 (12.7)	9/16 x 3/4	6.3 (2.86)
UP145	1-1/2	5	3 (76.2)	4 (101.6)	2-1/2 (63.5)	4-1/4 (107.95)	1/2 (12.7)	11/16 x 7/8	8.5 (3.86)
UP203	2	3	3 (76.2)	4-3/8 (111.12)	2-3/4 (69.85)	4-7/8 (123.82)	1/2 (12.7)	9/16 x 3/4	6.4 (2.90)
UP205	2	5	3 (76.2)	4-3/8 (111.12)	2-3/4 (69.85)	4-7/8 (123.82)	1/2 (12.7)	11/16 x 7/8	9.0 (4.08)
UP243	2-1/2	3	3 (76.2)	5 (127.0)	3-1/8 (79.38)	5-5/8 (142.88)	1/2 (12.7)	9/16 x 3/4	7.8 (3.54)
UP245	2-1/2	5	3 (76.2)	5 (127.0)	3-1/8 (79.38)	5-5/8 (142.88)	1/2 (12.7)	11/16 x 7/8	9.9 (4.49)
UP303	3	3	3 (76.2)	5-7/8 (149.22)	3-5/8 (92.08)	6-3/4 (171.45)	5/8 (15.88)	9/16 x 3/4	9.9 (4.49)
UP305	3	5	3 (76.2)	5-7/8 (149.22)	3-5/8 (92.08)	6-3/4 (171.45)	5/8 (15.88)	11/16 x 7/8	12.1 (5.49)
UP343	3-1/2	3	3-1/4 (82.55)	6-1/2 (165.1)	4 (101.6)	7-1/2 (190.5)	5/8 (15.88)	9/16 x 3/4	12.2 (5.53)
UP345	3-1/2	5	3-1/4 (82.55)	6-1/2 (165.1)	4 (101.6)	7-1/2 (190.5)	5/8 (15.88)	11/16 x 7/8	14.6 (6.62)
UP403	4	3	3-1/2 (88.9)	7-1/4 (184.15)	4-1/2 (114.3)	8 (203.2)	5/8 (15.88)	9/16 x 3/4	14.7 (6.68)
UP405	4	5	3-1/2 (88.9)	7-1/4 (184.15)	4-1/2 (114.3)	8 (203.2)	5/8 (15.88)	11/16 x 7/8	17.5 (7.85)

BRONZE

UDE

BUS SUPPORTS BRONZE VERTICAL TUBE TO INSULATOR

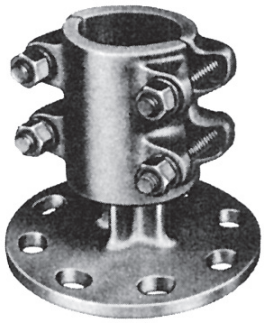

Bronze alloy bus support for vertical deadending copper tubing. Clamping bolts have hex-stops for one-wrench installation.

Cap screws are supplied for upright mounting.

Material: **Castings**—bronze alloy
Clamping hardware—silicon bronze or stainless steel
Mounting hardware—galvanized steel

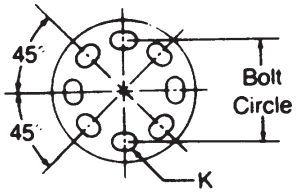

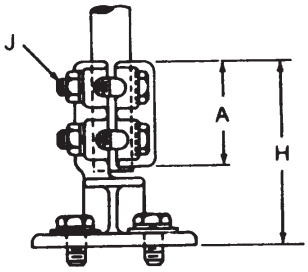

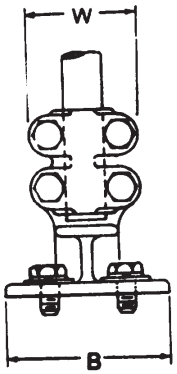

SD 14

Product Data & Conductor Size

CATALOG NUMBER	CONDUCTOR SIZE IPS	BOLT CIRCLE DIA.	DIMENSIONS INCHES (MM)					APPROX. WT. EACH LBS. (KG)
			H	A	W	J	K	
UDE063	3/4	3	5 (127.0)	3-1/8 (79.38)	2-1/2 (63.5)	3/8 (9.52)	9/16 x 3/4	4.6 (2.09)
UDE103	1	3	5 (127.0)	3-1/8 (79.38)	2-7/8 (73.02)	3/8 (9.52)	9/16 x 3/4	5.3 (2.40)
UDE105	1	5	5 (127.0)	3-1/8 (79.38)	2-7/8 (73.02)	3/8 (9.52)	11/16 x 7/8	6.1 (2.77)
UDE123	1-1/4	3	4-3/4 (120.65)	2-7/8 (73.02)	3-5/8 (92.08)	1/2 (12.7)	9/16 x 3/4	5.8 (2.63)
UDE125	1-1/4	5	4-3/4 (120.65)	2-7/8 (73.02)	3-5/8 (92.08)	1/2 (12.7)	11/16 x 7/8	6.5 (2.95)
UDE143	1-1/2	3	5-1/4 (133.35)	3-1/8 (79.38)	3-3/4 (95.25)	1/2 (12.7)	9/16 x 3/4	6.3 (2.86)
UDE145	1-1/2	5	5-1/4 (133.35)	3-1/8 (79.38)	3-3/4 (95.25)	1/2 (12.7)	11/16 x 7/8	9.0 (4.08)
UDE203	2	3	5-7/8 (149.22)	3-5/8 (92.08)	4-3/8 (111.12)	1/2 (12.7)	9/16 x 3/4	9.5 (4.31)
UDE205	2	5	5-7/8 (149.22)	3-5/8 (92.08)	4-3/8 (111.12)	1/2 (12.7)	11/16 x 7/8	9.8 (4.44)

BUS SUPPORTS
BRONZE
FLAT BAR TO INSULATOR

BRONZE
BHX

Bronze alloy bus support for copper flat bar.

Cap screws are supplied for upright mounting.

Material: **Castings**—bronze alloy
Clamping hardware—silicon bronze or stainless steel
Mounting hardware—galvanized steel

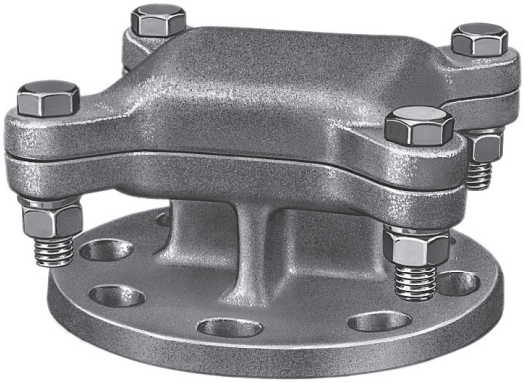

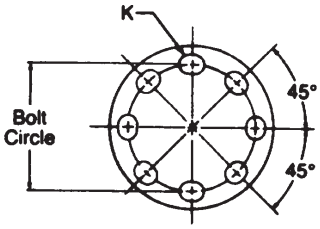

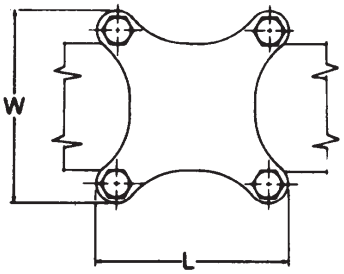

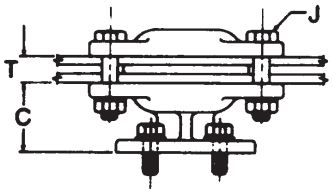

SD 15

Product Data & Conductor Size

CATALOG NUMBER	FLAT BAR SIZE INCHES	BOLT CIRCLE DIA.	DIMENSIONS INCHES (MM)						APPROX. WT. EACH LBS. (KG)
			L	C	T	W	J	K	
BHX403T	4	3	5-7/8 (149.22)	2-1/2 (63.5)	*	5-7/8 (149.22)	1/2 (12.7)	9/16 x 3/4	8.0 (3.63)
BHX405T	4	5	5-7/8 (149.22)	2-1/2 (63.5)	*	5-7/8 (149.22)	1/2 (12.7)	11/16 x 7/8	10.5 (4.76)
BHX503T	5	3	6-7/8 (174.62)	2-1/2 (63.5)	*	6-7/8 (174.62)	1/2 (12.7)	9/16 x 3/4	10.9 (4.94)
BHX603T	6	3	8-1/4 (209.55)	2-1/2 (63.5)	*	8-1/4 (209.55)	5/8 (15.88)	9/16 x 3/4	14.9 (6.76)
BHX605T	6	5	8-1/4 (209.55)	2-1/2 (63.5)	*	8-1/4 (209.55)	5/8 (15.88)	11/16 x 7/8	17.3 (7.85)

** Total thickness of bars and spacers to be specified. Example: BHX20334*

BRONZE

BVXA

BUS SUPPORTS BRONZE VERTICAL SLIP TYPE FLAT BAR TO INSULATOR

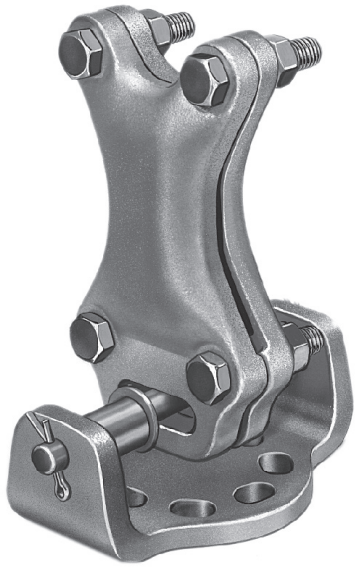

Bronze alloy, slide type bus support for copper flat bar. Roller allows 3 5/8" bus expansion.

Cap screws are supplied for upright mounting.

Material: **Castings**—bronze alloy
Clamping hardware—silicon bronze or stainless steel
Mounting hardware—galvanized steel
Roller—stainless steel

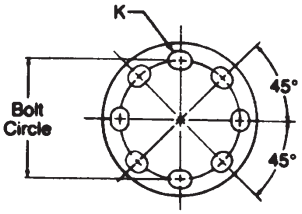

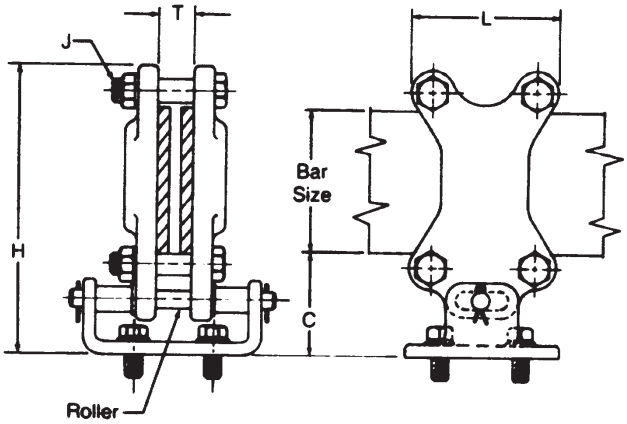

SD 16

Product Data & Conductor Size

CATALOG NUMBER	FLAT BAR SIZE INCHES	BOLT CIRCLE DIA.	DIMENSIONS INCHES (MM)						APPROX. WT. EACH LBS. (KG)
			L	H	C	T	J	K	
BVXA403T	4	3	3-7/8 (98.42)	8 (203.2)	3 (76.2)	*	1/2 (12.7)	9/16 x 3/4	8.9 (4.04)
BVXA503T	5	3	4-7/8 (123.82)	9 (228.6)	3 (76.2)	*	1/2 (12.7)	9/16 x 3/4	9.7 (4.40)
BVXA505T	5	5	4-7/8 (123.82)	9 (228.6)	3 (76.2)	*	1/2 (12.7)	11/16 x 7/8	12.9 (5.85)
BVXA603T	6	3	6-1/4 (158.75)	10-3/8 (263.52)	3 (76.2)	*	5/8 (15.88)	9/16 x 3/4	18.3 (8.30)

** Total thickness of bars and spacers to be specified. Example: BVXA403112*

BUS SUPPORTS BRONZE VERTICAL RIGID FLAT BAR TO INSULATOR

BRONZE
BVX

Bronze alloy bus support for copper flat bar.

Cap screws are supplied for upright mounting.

Material: **Castings**—bronze alloy
Clamping hardware—silicon bronze or stainless steel
Mounting hardware—galvanized steel

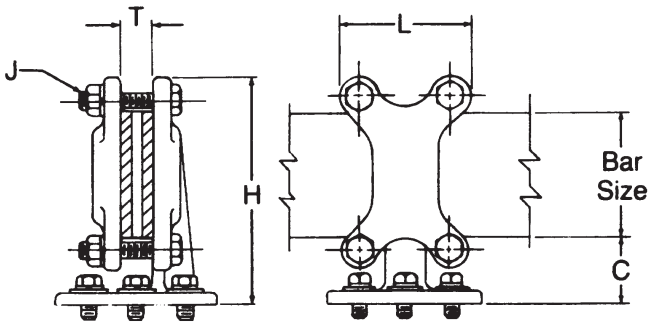

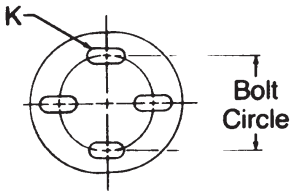

SD 17

Product Data & Conductor Size

CATALOG NUMBER	FLAT BAR SIZE		BOLT CIRCLE DIA.	DIMENSIONS INCHES (MM)						APPROX. WT. EACH LBS. (KG)
	MAIN	TAP		L	H	C	T	J	K	
BVX403T	4	2	3	3-7/8 (98.42)	8 (203.2)	3 (76.2)	*	1/2 (12.7)	9/16 x 3/4	8.8 (3.99)
BVX405T	4	2	5	5-3/4 (146.05)	7-7/8 (200.02)	3 (76.2)	*	1/2 (12.7)	11/16 x 7/8	10.1 (4.58)
BVX503T	5	3	3	4-3/4 (120.65)	8-7/8 (225.42)	3 (76.2)	*	1/2 (12.7)	9/16 x 3/4	9.4 (4.26)
BVX603T	6	4	3	6-1/4 (158.75)	10-1/4 (260.35)	3-1/8 (79.38)	*	5/8 (15.88)	9/16 x 3/4	16.3 (7.39)
BVX605T	6	4	5	6 (152.4)	10-3/8 (263.52)	3-1/8 (79.38)	*	5/8 (15.88)	11/16 x 7/8	17.6 (7.98)

** Total thickness of bars and spacers to be specified; example: BVX4031*

ALUMINUM WELDMENT CONNECTORS

INTRODUCTION

Welded joints of aluminum conductors offer advantages over bolted and compression fittings in performance and economy for certain applications. This is especially true when the proper welding method (MIG or TIG) and the proper weldment connectors are selected.

The best electrical joints are obtained when quality connectors of proven performance, that are backed by a reputable connector manufacturer, are installed with the proper welding methods.

Electric arc welding, with an inert gas shield, provides electrically and mechanically sound joints that require no special surface preparation other than cleaning of the joint to be welded. There is no contact resistance in a properly welded joint. The resulting connection is highly efficient and adds very little bulk to the conductors.

From an economic standpoint, welded joints are more feasible in larger substations that can justify the services of experienced welders and the use of the proper welding apparatus. Practically all types of joints for joining aluminum angle bar, sheet and tubular bus are possible through the use of proper welding accessories. It is also practical to weld tubular bus to cable and cable terminal joints through proper welding techniques and cable connectors. Of course, proper provision must be made to free the cable of high stresses in the vicinity of the weld because of the annealed conductor strands.

Many techniques have been developed for the welded assembly of aluminum conductors in substations, but certain ones have been found to offer more advantages than others. Accessories in the form of cast aluminum weldment connectors have been developed to facilitate the joining and supporting of aluminum conductors. These connectors, as developed by Anderson, have been designed to provide:

1. Rigid support and proper alignment.
2. Fast assembly without need for tedious forming and fitting of bus.
3. Continuous welds of regular contours that provide a weld area equivalent to 1-10% of the cross sectional area of the connector.
4. Neat appearance without bulky additions beyond the size and shape of the conductors.
5. Smooth contours suitable for high voltage applications where corona and R.I.V. level are of concern.
6. Flexible couplers to compensate for expansion and contraction of bus.
7. Many other features available for specific applications.

Anderson supplies cast weldment fittings of 356 aluminum alloy which are heat treated to T6 condition for applications requiring high strength and good electrical conductivity. It is wise to choose the filler alloy on the basis of the parent metal alloys to be joined. A poor choice can cause various difficulties, i.e.,

1. Low strength.
2. Weld cracking.
3. Poor corrosion resistance.
4. Poor color matching.
5. Difficulty in welding.

The filler rod material recommended by Anderson for joining 356-T6 cast aluminum fittings to EC grade aluminum conductor materials is 4043 alloy. This filler material has a typical conductivity of 40 per cent (IACS). Although it would appear that a purer material should be used for welding aluminum castings and the EC grades of conductor materials, the resulting joint usually has a lower resistance than an equivalent length of conductor. Also, a further point for consideration is that 4043 alloy is considerably easier to weld than the higher purity filler materials.

For more information on Welding Methods and Apparatus, see reference section ST.

BUS SUPPORTS ALUMINUM WELDMENT TUBE TO INSULATOR

ALUMINUM

WURE

Aluminum alloy horizontal weldment bus support for aluminum tubing. Designed for slip-fit or rigid applications.

Cap screws are supplied for upright mounting. Static eliminator spring furnished as standard.

Material: **Castings**—356-T6 aluminum alloy
Mounting hardware—galvanized steel
Static spring—stainless steel

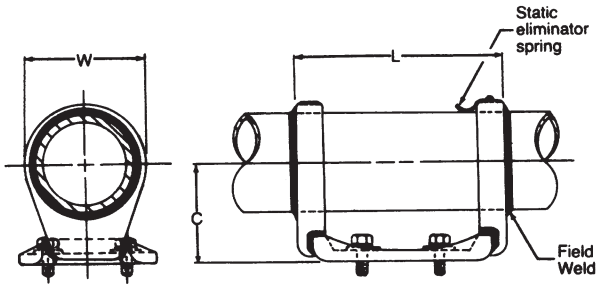

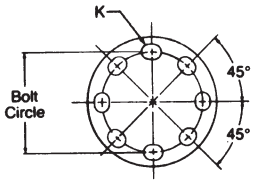

Product Data & Conductor Size

CATALOG NUMBER	ALUMINUM CONDUCTOR SIZE IPS /EHIPS	BOLT CIRCLE DIA.	DIMENSIONS INCHES (MM)				APPROX. WT. EACH LBS. (KG)
			L	C	W	K	
WURE103	1	3	6-1/2 (165.1)	2 (50.8)	3 (76.2)	9/16 x 3/4	1.5 (.68)
WURE123	1-1/4	3	6-1/2 (165.1)	2-1/2 (63.5)	3 (76.2)	9/16 x 3/4	1.7 (.77)
WURE143	1-1/2	3	6-1/2 (165.1)	2-1/2 (63.5)	3 (76.2)	9/16 x 3/4	1.7 (.77)
WURE145	1-1/2	5	9-1/8 (231.78)	2-1/2 (63.5)	3 (76.2)	11/16 x 7/8	2.3 (1.04)
WURE203	2	3	6-1/2 (165.1)	2-3/4 (69.85)	3-1/4 (82.55)	9/16 x 3/4	2.5 (1.13)
WURE205	2	5	9-1/8 (231.78)	2-3/4 (69.85)	3-1/4 (82.55)	11/16 x 7/8	3.0 (1.36)
WURE243	2-1/2	3	6-1/2 (165.1)	3-1/8 (79.38)	3-3/4 (95.25)	9/16 x 3/4	2.8 (1.27)
WURE245	2-1/2	5	9-1/8 (231.78)	3-1/8 (79.38)	3-3/4 (95.25)	11/16 x 7/8	3.2 (1.45)
WURE303	3	3	6-1/2 (165.1)	3-5/8 (92.08)	4-1/2 (114.3)	9/16 x 3/4	2.7 (1.22)
WURE305	3	5	9-1/8 (231.78)	3-5/8 (92.08)	4-1/2 (114.3)	11/16 x 7/8	3.4 (1.54)
WURE343	3-1/2	3	6-1/2 (165.1)	4 (101.6)	5-1/4 (133.35)	9/16 x 3/4	4.2 (1.90)
WURE345	3-1/2	5	9-1/8 (231.78)	4 (101.6)	5-1/4 (133.35)	11/16 x 7/8	4.7 (2.13)
WURE403	4	3	6-1/2 (165.1)	4-1/2 (114.3)	5- 5/8 (142.88)	9/16 x 3/4	3.9 (1.77)
WURE405	4	5	9-3/8 (238.12)	4-1/2 (114.3)	5- 5/8 (142.88)	11/16 x 7/8	5.7 (2.58)
WURE505	5	5	9-3/8 (238.12)	4-7/8 (123.82)	6-3/4 (171.45)	11/16 x 7/8	6.1 (2.77)
WURE605	6	5	9-7/8 (250.82)	5- 3/8 (136.52)	7-3/4 (196.85)	11/16 x 7/8	6.9 (3.13)

BUS SUPPORTS ALUMINUM WELDMENT TUBE TO INSULATOR

ALUMINUM

WTH

Aluminum alloy horizontal weldment bus support for aluminum tubing. Designed for slip-fit or rigid applications.

Cap screws are supplied for upright mounting. Static eliminator spring furnished as standard.

Material: **Castings**—356-T6 aluminum alloy
Mounting hardware—galvanized steel
Static spring—stainless steel

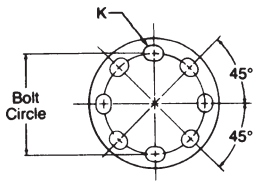

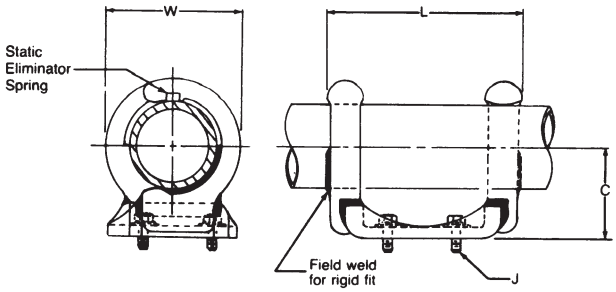

Product Data & Conductor Size

CATALOG NUMBER	ALUMINUM CONDUCTOR SIZE IPS /EHIPS	BOLT CIRCLE DIA.	DIMENSIONS INCHES (MM)					APPROX. WT. EACH LBS. (KG)
			L	C	W	J	K	
WTH103	1	3	6-3/4 (171.45)	2 (50.8)	3 (76.2)	1/2 (12.7)	9/16 x 3/4	2.2 (2.0)
WTH105	1	5	9-3/8 (238.12)	2-1/4 (57.15)	3 (76.2)	5/8 (15.88)	11/16 x 7/8	2.7 (1.22)
WTH123	1-1/4	3	6-3/4 (171.45)	2-1/4 (57.15)	3-1/4 (82.55)	1/2 (12.7)	9/16 x 3/4	2.0 (.91)
WTH125	1-1/4	5	9-3/8 (238.12)	2-3/8 (60.32)	3-1/4 (82.55)	5/8 (15.88)	11/16 x 7/8	2.3 (1.04)
WTH143	1-1/2	3	6-3/4 (171.45)	2-1/2 (63.5)	3-1/2 (88.9)	1/2 (12.7)	9/16 x 3/4	2.04 (1.09)
WTH145	1-1/2	5	9-3/8 (238.12)	2-1/2 (63.5)	3-1/2 (88.9)	5/8 (15.88)	11/16 x 7/8	3.2 (1.45)
WTH203	2	3	6-3/4 (171.45)	2-3/4 (69.85)	4 (101.6)	1/2 (12.7)	9/16 x 3/4	2.5 (1.13)
WTH205	2	5	9-3/8 (238.12)	2-3/4 (69.85)	4 (101.6)	5/8 (15.88)	11/16 x 7/8	3.7 (1.68)
WTH243	2-1/2	3	6-3/4 (171.45)	3-1/8 (79.38)	4-1/2 (114.3)	1/2 (12.7)	9/16 x 3/4	2.6 (1.18)
WTH245	2-1/2	5	9-3/8 (238.12)	3-1/8 (79.38)	4-1/2 (114.3)	5/8 (15.88)	11/16 x 7/8	3.8 (1.72)
WTH303	3	3	6-3/4 (171.45)	3-5/8 (92.08)	5-1/2 (139.7)	1/2 (12.7)	9/16 x 3/4	3.0 (1.36)
WTH305	3	5	9-3/8 (238.12)	3-5/8 (92.08)	5-1/2 (139.7)	5/8 (15.88)	11/16 x 7/8	4.1 (1.86)
WTH343	3-1/2	3	6-3/4 (171.45)	4 (101.6)	5-7/8 (149.22)	1/2 (12.7)	9/16 x 3/4	2.7 (1.22)
WTH345	3-1/2	5	9-3/8 (238.12)	4 (101.6)	5-7/8 (149.22)	5/8 (15.88)	11/16 x 7/8	3.6 (1.63)
WTH403	4	3	9-1/8 (231.78)	4-1/2 (114.3)	6-1/2 (165.1)	1/2 (12.7)	9/16 x 3/4	3.9 (1.77)
WTH405	4	5	9-3/8 (238.12)	4-1/2 (114.3)	6-1/2 (165.1)	5/8 (15.88)	11/16 x 7/8	4.8 (2.18)
WTH407	4	7	11-3/4 (298.45)	4-1/2 (114.3)	6-1/2 (165.1)	5/8 (15.88)	13/16 x 1	5.5 (10.6)

Continued on next page.

BUS SUPPORTS ALUMINUM WELDMENT TUBE TO INSULATOR (CONTINUED)

Product Data & Conductor Size

CATALOG NUMBER	ALUMINUM CONDUCTOR SIZE IPS /EHIPS	BOLT CIRCLE DIA.	DIMENSIONS INCHES (MM)					APPROX. WT. EACH LBS. (KG)
			L	C	W	J	K	
WTH503	5	3	9-3/8 (238.12)	4-7/8 (123.82)	7-7/8 (200.02)	1/2 (12.7)	9/16 x 3/4	4.6 (2.09)
WTH505	5	5	9-3/8 (238.12)	4-7/8 (123.82)	7-7/8 (200.02)	5/8 (15.88)	11/16 x 7/8	5.0 (2.27)
WTH507	5	7	11-3/4 (298.42)	4-7/8 (123.82)	7-7/8 (200.02)	3/4 (19.05)	13/16 x 1	5.7 (2.58)
WTH603	6	3	9-3/8 (238.12)	5-3/8 (136.52)	9-1/8 (231.78)	1/2 (12.7)	9/16 x 3/4	4.9 (2.22)
WTH605	6	5	9-3/8 (238.12)	5-3/8 (136.52)	9-1/8 (231.78)	5/8 (15.88)	11/16 x 7/8	5.7 (2.58)
WTH607	6	7	11-3/4 (298.42)	5-3/8 (136.52)	9-1/8 (231.78)	3/4 (19.05)	13/16 x 1	6.9 (3.13)

ALUMINUM

WURF

BUS SUPPORTS ALUMINUM WELDMENT EXPANSION TUBE TO INSULATOR

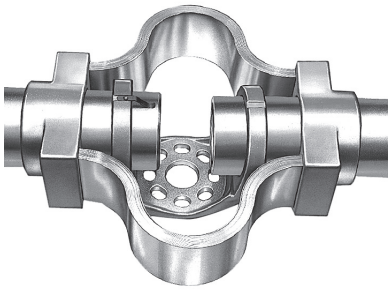

Refer to chart DC-6536 on page SD-9 for installation instructions.

Aluminum alloy, horizontal weldment, expansion bus support for aluminum tubing. Add "H" to catalog number (WURFH) if schedule 80 EHIPS tubing is to be used. Static eliminator spring is furnished as standard.

Cap screws are supplied for upright mounting.

Material: **Castings**—356-T6 aluminum alloy
Factory formed laminated shunt—aluminum
Hardware—galvanized steel
Static spring—stainless steel

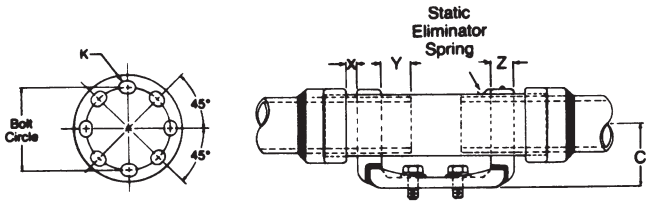

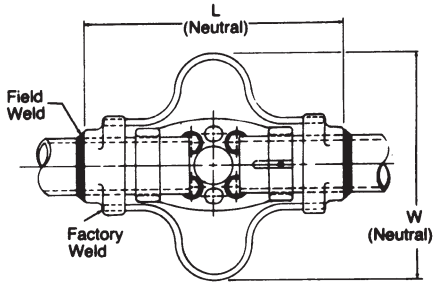

SD 22

Product Data & Conductor Size

CATALOG NUMBER	ALUMINUM CONDUCTOR SIZE IPS	BOLT CIRCLE DIA.	DIMENSIONS INCHES (MM)					APPROX. WT. EACH LBS. (KG)
			L	C	Z	W	K	
WURF203	2	3 ◊	11 (279.4)	2-3/4 (69.85)	3/4 (19.05)	12-3/8 (314.32)	9/16 x 3/4	7.7 (3.49)
WURF205	2	5 ◊◊	14-1/8 (358.78)	2-3/4 (69.85)	3/4 (19.05)	13 (330.2)	11/16 x 7/8	9.1 (4.13)
WURF243	2-1/2	3 ◊	11 (279.4)	3-1/8 (79.38)	3/4 (19.05)	10-5/8 (269.88)	9/16 x 3/4	7.8 (3.54)
WURF245	2-1/2	5 ◊◊	14-1/8 (358.78)	3-1/8 (79.38)	3/4 (19.05)	12-7/8 (327.02)	11/16 x 7/8	9.9 (4.49)
WURF303	3	3 ◊	11 (279.4)	3-5/8 (92.08)	13/16 (20.64)	13-3/8 (339.72)	9/16 x 3/4	11.2 (5.08)
WURF305	3	5 ◊◊	14-1/8 (358.78)	3-5/8 (92.08)	13/16 (20.64)	15-7/8 (403.22)	11/16 x 7/8	12.6 (5.72)
WURF343	3-1/2	3 ◊	11 (279.4)	4 (101.6)	1 (25.4)	14 (355.6)	9/16 x 3/4	18.4 (8.35)
WURF345	3-1/2	5 ◊◊	14-1/8 (358.78)	4 (101.6)	1 (25.4)	14-3/8 (365.12)	11/16 x 7/8	21.9 (9.93)
WURF403	4	3 ◊	11 (279.4)	4-1/2 (114.3)	1 (25.4)	14-3/4 (374.65)	9/16 x 3/4	20.8 (9.43)
WURF405	4	5 ◊◊	14-3/8 (365.12)	4-1/2 (114.3)	1-1/4 (31.75)	17 (431.8)	11/16 x 7/8	19.8 (8.98)
WURF503	5	3 ◊	11-1/2 (292.1)	4-7/8 (123.82)	1-1/4 (31.75)	17 (431.8)	9/16 x 3/4	27.4 (12.43)
WURF505	5	5 ◊◊	14-3/8 (365.12)	4-7/8 (123.82)	1-1/4 (31.75)	18-1/8 (460.38)	11/16 x 7/8	23.1 (10.48)
WURF605	6	5 ◊◊	14-7/8 (377.82)	5-3/8 (136.52)	1-1/2 (38.1)	19-1/4 (488.95)	11/16 x 7/8	32.7 (14.83)

Designed for ◊ 3 1-1/8" expansion, 80 ft. maximum total bus length (both sides)
◊◊ 3 2-1/8" expansion, 160 ft. maximum total bus length (both sides)

BUS SUPPORTS ALUMINUM WELDMENT TUBE TO INSULATOR

ALUMINUM
WUDE

Aluminum alloy, vertical weldment bus support for tubing. Cap screws are supplied for upright mounting.

Material: **Castings**—356-T6 aluminum alloy
Hardware—galvanized steel

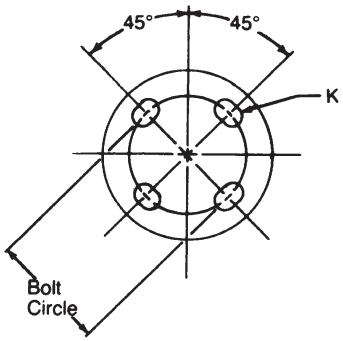

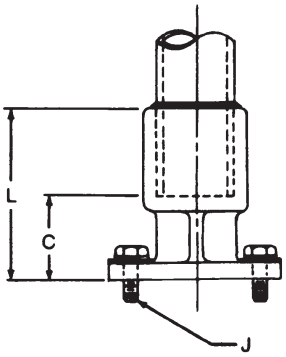

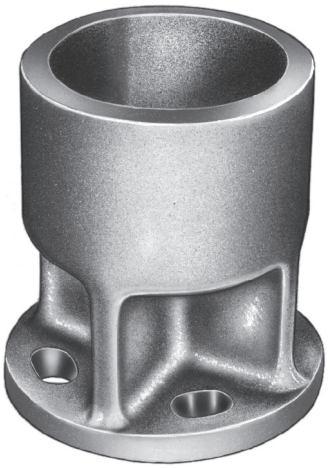

SD 23

Product Data & Conductor Size

CATALOG NUMBER	ALUMINUM CONDUCTOR SIZE IPS/EHIPS	BOLT CIRCLE DIA.	DIMENSIONS INCHES (MM)				APPROX. WT. EACH LBS. (KG)
			L	C	J	K	
WUDE123	1-1/4	3	2-7/8 (73.02)	1-7/8 (47.62)	1/2 (12.7)	9/16 x 3/4	1.6 (.72)
WUDE143	1-1/2	3	3-3/8 (85.72)	2-1/8 (53.98)	1/2 (12.7)	9/16 x 3/4	1.9 (.86)
WUDE203	2	3	4 (101.6)	2-1/4 (57.15)	1/2 (12.7)	9/16 x 3/4	2.1 (.95)
WUDE205	2	5	4 (101.6)	2-1/4 (57.15)	5/8 (15.88)	11/16 x 7/8	3.2 (1.45)
WUDE243	2-1/2	3	4-1/2 (115.4)	2-1/2 (63.5)	1/2 (12.7)	9/16 x 3/4	2.5 (1.13)
WUDE245	2-1/2	5	4-1/2 (115.4)	2-1/2 (63.5)	5/8 (15.88)	11/16 x 7/8	3.4 (1.54)
WUDE303	3	3	5 (127.0)	2-1/2 (63.5)	1/2 (12.7)	9/16 x 3/4	2.7 (1.22)
WUDE305	3	5	5 (127.0)	2-1/2 (63.5)	5/8 (15.88)	11/16 x 7/8	3.8 (1.72)
WUDE343	3-1/2	3	4-3/4 (120.65)	2-3/4 (69.85)	1/2 (12.7)	9/16 x 3/4	3.5 (1.59)
WUDE345	3-1/2	5	4-3/4 (120.65)	2-3/4 (69.85)	5/8 (15.88)	11/16 x 7/8	4.5 (2.04)
WUDE403	4	3	5 (127.0)	2-3/4 (69.85)	1/2 (12.7)	9/16 x 3/4	3.9 (1.77)
WUDE405	4	5	5 (127.0)	2-3/4 (69.85)	5/8 (15.88)	11/16 x 7/8	5.0 (2.27)
WUDE505	5	5	5-1/4 (133.35)	2-3/4 (69.85)	5/8 (15.88)	11/16 x 7/8	6.5 (2.95)

SUBSTATION CONNECTORS

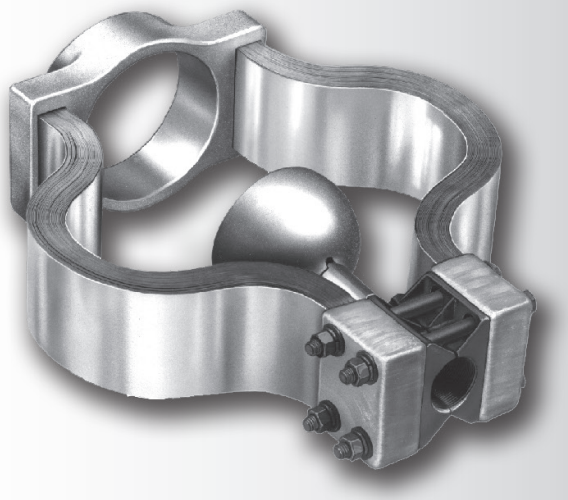

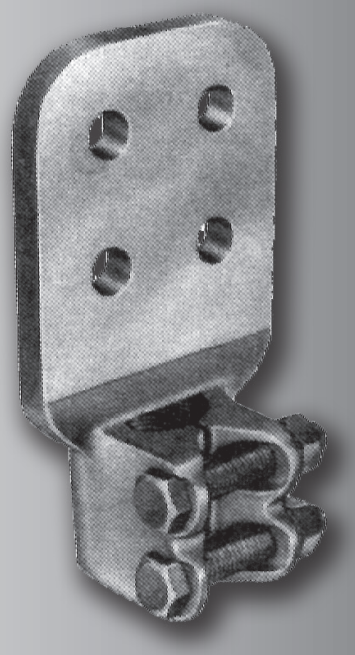

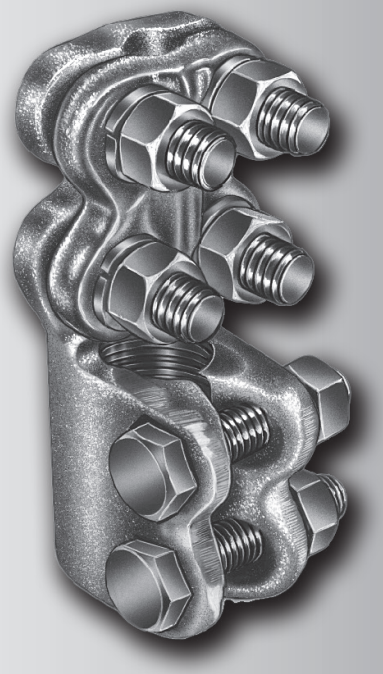

SECTION S

STUD CONNECTORS

Aluminum Bolted

Bronze Bolted

STUD CONNECTORS

BOLTED/ALUMINUM

ADSC ..... STUD TO CABLE SE-1
ADSF ..... STUD TO FLAT SE-5
ADST ..... STUD TO TUBE SE-3
DSATL ..... STUD TO TUBE SE-6

WELDMENT/ALUMINUM

WSATL ..... WELDMENT EXPANSION, STUD TO TUBE SE-8

BOLTED/BRONZE

D2S ..... STUD TO TWO CABLES OR TUBES SE-12
DS ..... STUD TO CABLE OR TUBE SE-11
DSC ..... STUD TO CABLE SE-9
DST ..... STUD TO TUBE SE-13
DSTL ..... EXPANSION, STUD TO TUBE SE-14
HDSF ..... STUD TO FLAT SE-16

STUD CONNECTORS BOLTED ALUMINUM STUD TO CABLE

ALUMINUM
ADSC

Aluminum alloy stud connector for connecting aluminum cable to aluminum or copper equipment stud. Clamping bolts have hex-stops for one-wrench installation. Contact sealant is factory installed in connector stud threads and is recommended for conductor installation.

Material: **Casting**–356-T6 Aluminum Alloy
Hardware – Aluminum Alloy

Note: To specify 90 degree connector, add "90" to catalog number.
Example: ADSC11139012

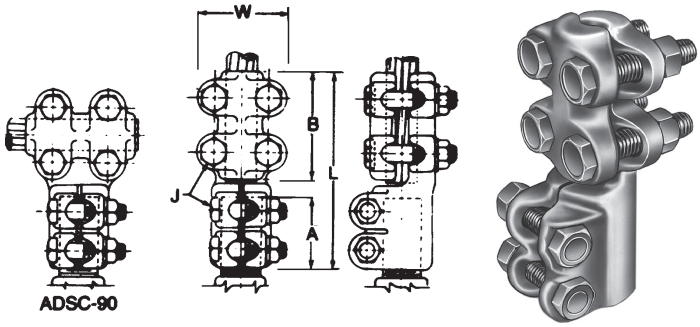

Product Data & Conductor Size

CATALOG NUMBER	STUD DIA./THD.	CONDUCTOR RANGE			DIMENSIONS INCHES (MM)					APPROX. WT. EACH LBS. (KG)
		AAC	ACSR	DIA.	L	A	B	W	J	
*ADSC06616	3/4 - 16	#4 Sol.-250 MCM	#4-4/0 Str.	.232-.575 (5.89-14.60)	5-3/4 (146.05)	2 (50.8)	3 (76.2)	2-1/2 (63.5)	1/2 (12.7)	1.0 (.45)
ADSC06716	3/4 - 16	250-400 MCM	4/0-336.4 MCM	.563-.744 (14.30-18.90)	5-3/4 (146.05)	2 (50.8)	3 (76.2)	2-1/2 (63.5)	1/2 (12.7)	1.1 (.50)
*ADSC10614	1 - 14	#4 Sol.-250 MCM	#4-4/0 Str.	.232-.575 (5.89-14.60)	5-5/8 (142.88)	2 (50.8)	3 (76.2)	2-1/2 (63.5)	1/2 (12.7)	1.1 (.50)
ADSC10714	1 - 14	250-400 MCM	4/0-336.4 MCM	.563-.744 (14.30-18.90)	5-3/4 (146.05)	2 (50.8)	3 (76.2)	2-1/2 (63.5)	1/2 (12.7)	1.2 (.54)
ADSC10914	1 - 14	350-600 MCM	336.4-477 MCM	.681-.893 (17.30-22.68)	5-7/8 (149.22)	2 (50.8)	3-1/4 (82.55)	2-3/4 (69.85)	1/2 (12.7)	1.4 (.64)
*ADSC11612	1-1/8 - 12	#4 Sol.-250 MCM	#4-4/0 Str.	.632-.575 (16.05-14.60)	5-3/4 (146.05)	2 (50.8)	3 (76.2)	2-1/2 (63.5)	1/2 (12.7)	1.2 (.54)
ADSC11712	1-1/8 - 12	250-400 MCM	4/0-336.4 MCM	.563-.744 (14.30-18.90)	5-5/8 (142.88)	2 (50.8)	3 (76.2)	2-1/2 (63.5)	1/2 (12.7)	1.3 (.59)
ADSC11912	1-1/8 - 12	350-600 MCM	336.4-477 MCM	.681-.893 (17.30-22.68)	5-7/8 (149.22)	2 (50.8)	3-1/4 (82.55)	2-3/4 (69.85)	1/2 (12.7)	1.6 (.72)
ADSC111112	1-1/8 - 12	600-900 MCM	556.5-795 MCM	.870-1.108 (22.10-28.14)	6-1/8 (155.58)	2 (50.8)	3-1/2 (88.9)	3 (76.2)	1/2 (12.7)	1.9 (.86)
ADSC111312	1-1/8 - 12	900-1250 MCM	715.5-1113 MCM	1.108-1.293 (28.14-32.84)	6-5/8 (168.28)	2-1/8 (53.98)	3-3/4 (95.25)	3-1/4 (82.55)	1/2 (12.7)	2.3 (1.0)
*ADSC12612	1-1/4 - 12	#4 Sol.-250 MCM	#4-4/0 Str.	.232-.575 (5.89-14.60)	5-3/4 (146.05)	2 (50.8)	3 (76.2)	2-1/2 (63.5)	1/2 (12.7)	1.2 (.54)
ADSC12712	1-1/4 - 12	250-400 MCM	4/0-336.4 MCM	.563-.744 (14.30-18.90)	5-3/4 (146.05)	2 (50.8)	3 (76.2)	2-1/2 (63.5)	1/2 (12.7)	1.3 (.59)
ADSC12912	1-1/4 - 12	350-600 MCM	336.4-477 MCM	.681-.893 (17.30-22.68)	6 (152.4)	2 (50.8)	3-1/4 (82.55)	2-3/4 (69.85)	1/2 (12.7)	1.6 (.72)
ADSC121112	1-1/4 - 12	600-900 MCM	556.5-795 MCM	.870-1.108 (22.10-28.14)	6-1/4 (158.75)	2 (50.8)	3-1/2 (88.9)	3 (76.2)	1/2 (12.7)	1.9 (.86)
ADSC121312	1-1/4 - 12	900-1250 MCM	715.5-1113 MCM	1.108-1.293 (28.14-32.84)	6-1/2 (165.1)	2 (50.8)	3-3/4 (95.25)	3-1/4 (82.55)	1/2 (12.7)	2.4 (1.1)
ADSC14712	1-1/2 - 12	250-400 MCM	4/0-336.4 MCM	.563-.744 (14.30-18.90)	5-3/4 (146.05)	2 (50.8)	3 (76.2)	2-1/2 (63.5)	1/2 (12.7)	1.3 (.59)
ADSC14912	1-1/2 - 12	350-600 MCM	336.4-477 MCM	.681-.893 (17.30-22.68)	6 (152.4)	2 (50.8)	3-1/4 (82.55)	2-3/4 (69.85)	1/2 (12.7)	1.5 (.68)
ADSC141112	1-1/2 - 12	600-900 MCM	556.5-795 MCM	.870-1.108 (22.10-28.14)	6-1/4 (158.75)	2 (50.8)	3-1/2 (88.9)	3 (76.2)	1/2 (12.7)	2.0 (.91)
ADSC141312	1-1/2 - 12	900-1250 MCM	715.5-1113 MCM	1.108-1.293 (28.14-32.84)	6-1/2 (165.1)	2 (50.8)	3-3/4 (95.25)	3-1/4 (82.55)	1/2 (12.7)	2.4 (1.09)

** Furnished with reversible cable caps.*
Continued on next page.

STUD CONNECTORS BOLTED ALUMINUM STUD TO CABLE (CONTINUED)

Product Data & Conductor Size

CATALOG NUMBER	STUD DIA./THD.	CONDUCTOR RANGE			DIMENSIONS INCHES (MM)					APPROX. WT. EACH LBS. (KG)
		AAC	ACSR	DIA.	L	A	B	W	J	
ADSC141612	1-1/2 - 12	1500-2000 MCM	1272-1590 MCM	1.382-1.632 (35.10-41.45)	7-1/4 (184.15)	2 (50.8)	4-1/2 (114.3)	3-5/8 (92.08)	1/2 (12.7)	2.9 (1.3)
ADSC16712	1-3/4 - 12	250-400 MCM	4/0-336.4 MCM	.563-.744 (14.30-18.90)	5-1/4 (133.35)	2 (50.8)	3 (76.2)	2-1/2 (63.5)	1/2 (12.7)	1.5 (.68)
ADSC161312	1-3/4 - 12	900-1250 MCM	715.5-1113 MCM	1.108-1.293 (28.14-32.84)	6-5/8 (168.28)	2 (50.8)	3-3/4 (95.25)	3-1/4 (82.55)	1/2 (12.7)	2.6 (1.18)
ADSC20912	2 - 12	350-600 MCM	336.4-477 MCM	.681-.893 (17.30-22.68)	6-1/8 (155.58)	2 (50.8)	3-1/4 (82.55)	2-3/4 (69.85)	1/2 (12.7)	1.6 (.72)
ADSC201112	2 - 12	600-900 MCM	556.5-795 MCM	.870-1.108 (22.10-28.96)	6-1/4 (158.75)	2 (50.8)	3-1/2 (88.9)	3 (76.2)	1/2 (12.7)	2.3 (1.04)
ADSC201312	2 - 12	900-1250 MCM	715.5-1113 MCM	1.108-1.293 (28.14-32.84)	6-1/2 (165.1)	2 (50.8)	3-3/4 (95.25)	3-1/8 (79.38)	1/2 (12.7)	2.6 (1.18)
ADSC201512	2 - 12	1250-1600 MCM	1113-1272 MCM	1.289-1.459 (32.74-37.06)	7 (177.8)	2 (50.8)	4-1/4 (107.95)	3-3/8 (85.72)	1/2 (12.7)	3.1 (1.41)

STUD CONNECTORS BOLTED ALUMINUM STUD TO TUBE

ALUMINUM
ADST

Aluminum alloy stud connector for connecting aluminum tubing to aluminum or copper equipment stud. Clamping bolts have hex-stops for one-wrench installation. Contact sealant is factory installed in connector stud threads and is recommended for conductor installation.

Material: **Casting**–356-T6 Aluminum Alloy
Hardware – Aluminum Alloy

Note: To specify 90 degree connector, add "90" to catalog number.
Example: ADST14209012

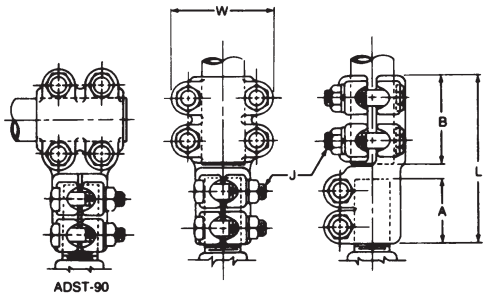

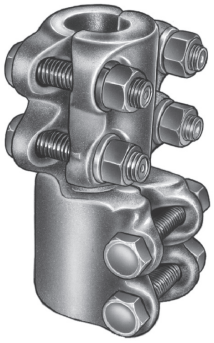

Product Data & Conductor Size

CATALOG NUMBER	STUD DIA./THD.	CONDUCTOR SIZE TUBING IPS/EHIPS	DIMENSIONS INCHES (MM) L	A	B	W	J	APPROX. WT. EACH LBS. (KG)
ADST061016	3/4 - 16	1	5-1/2 (139.7)	2-1/8 (53.98)	2-3/4 (69.85)	3-1/4 (82.55)	1/2 (12.7)	1.4 (.64)
ADST101214	1 - 14	1-1/4	5-3/4 (146.05)	2 (50.8)	3 (76.2)	3-5/8 (92.08)	1/2 (12.7)	2.3 (1.04)
ADST110612	1-1/8 - 12	3/4	5-1/4 (133.35)	2 (50.8)	2-1/2 (63.5)	3 (76.2)	1/2 (12.7)	1.5 (.68)
ADST111012	1-1/8 - 12	1	5-1/2 (139.7)	2-1/8 (53.98)	2-3/4 (69.85)	3-1/4 (82.55)	1/2 (12.7)	1.6 (.72)
ADST111212	1-1/8 - 12	1-1/4	5-3/4 (146.05)	2 (50.8)	3 (76.2)	3-5/8 (92.08)	1/2 (12.7)	2.3 (1.04)
ADST120612	1-1/4 - 12	3/4	5-3/8 (136.52)	2 (50.8)	2-1/2 (63.5)	3 (76.2)	1/2 (12.7)	1.5 (.68)
ADST121012	1-1/4 - 12	1	5-1/2 (139.7)	2 (50.8)	2-3/4 (69.85)	3-1/4 (82.55)	1/2 (12.7)	1.7 (.77)
ADST121212	1-1/4 - 12	1-1/4	5-1/2 (139.7)	2 (50.8)	2-3/4 (69.85)	3-5/8 (92.08)	1/2 (12.7)	2.4 (1.09)
ADST122012	1-1/4 - 12	2	6-1/4 (158.75)	2 (50.8)	3-1/2 (88.9)	4-3/8 (111.12)	1/2 (12.7)	3.5 (1.6)
ADST140612	1-1/2 - 12	3/4	5-1/4 (133.35)	2 (50.8)	2-1/2 (63.5)	3 (76.2)	1/2 (12.7)	1.8 (.82)
ADST141012	1-1/2 - 12	1	5-1/2 (139.7)	2 (50.8)	2-3/4 (69.85)	3-1/4 (82.55)	1/2 (12.7)	1.9 (.86)
ADST141212	1-1/2 - 12	1-1/4	5-3/4 (146.05)	2 (50.8)	3 (76.2)	3-5/8 (92.08)	1/2 (12.7)	2.7 (1.22)
ADST141412	1-1/2 - 12	1-1/2	6 (152.4)	2 (50.8)	3-1/4 (82.55)	3-7/8 (98.42)	1/2 (12.7)	2.9 (1.32)
ADST142012	1-1/2 - 12	2	6-3/8 (161.92)	2 (50.8)	3-1/2 (88.9)	4-3/8 (111.12)	1/2 (12.7)	3.9 (1.77)
ADST142412	1-1/2 - 12	2-1/2	6-1/2 (165.1)	2-1/4 (57.15)	3-3/4 (95.25)	4-1/4 (107.95)	1/2 (12.7)	4.1 (1.9)
ADST143012	1-1/2 - 12	3	7 (177.8)	2 (50.8)	4 (101.6)	5-1/2 (139.7)	1/2 (12.7)	4.3 (2.0)
ADST161012	1-3/4 - 12	1	5-1/2 (139.7)	2 (50.8)	2-3/4 (69.85)	3-1/4 (82.55)	1/2 (12.7)	2.0 (.91)
ADST161412	1-3/4 - 12	1-1/2	6 (152.4)	2 (50.8)	3-1/4 (82.55)	3-7/8 (98.42)	1/2 (12.7)	3.0 (1.36)

Continued on next page.

STUD CONNECTORS BOLTED ALUMINUM STUD TO TUBE (CONTINUED)

Product Data & Conductor Size

CATALOG NUMBER	STUD DIA./THD.	CONDUCTOR SIZE TUBING IPS/EHIPS	DIMENSIONS INCHES (MM) L	A	B	W	J	APPROX. WT. EACH LBS. (KG)
ADST163012	1-3/4 - 12	3	6-3/4 (171.45)	2 (50.8)	4 (101.6)	5-1/2 (139.7)	1/2 (12.7)	4.5 (2.0)
ADST201412	2 - 12	1-1/2	6 (152.4)	2 (50.8)	3-1/4 (82.55)	3-7/8 (98.42)	1/2 (12.7)	3.4 (1.54)
ADST202012	2 - 12	2	6-3/8 (161.92)	1-7/8 (47.62)	3-1/2 (88.9)	4-3/8 (111.12)	1/2 (12.7)	4.8 (2.18)
ADST202412	2 - 12	2-1/2	6-5/8 (168.28)	2 (50.8)	3-3/4 (95.25)	4-7/8 (123.82)	1/2 (12.7)	6.0 (2.72)
ADST203012	2 - 12	3	7 (177.80)	2 (50.8)	4 (101.6)	5-1/2 (139.7)	1/2 (12.7)	6.3 (2.9)
ADST241412	2-1/2 - 12	1-1/2	6-5/8 (168.28)	2-1/2 (63.5)	3-1/4 (82.55)	3-7/8 (96.42)	1/2 (12.7)	4.5 (2.04)
ADST303012	3 - 12	3	7-7/8 (200.03)	2-7/8 (73.03)	4 (101.6)	5-7/8 (149.23)	5/8 (15.88)	7.7 (3.49)
ADST304012	3 - 12	4	8-1/8 (206.38)	2-7/8 (73.03)	4-1/4 (107.95)	7 (177.8)	5/8 (15.88)	8.2 (3.72)
ADST305012	3 - 12	5	8-7/8 (225.43)	2-7/8 (73.03)	5 (127)	8 (203.2)	5/8 (15.88)	8.6 (3.9)

STUD CONNECTORS BOLTED ALUMINUM STUD TO FLAT

ALUMINUM
ADSF

Aluminum alloy stud connector for connecting aluminum flat to aluminum or copper equipment stud. Contact surfaces are finished on both sides of the pad. Clamping bolts have hex-stops for one-wrench installation. Contact sealant is factory installed in connector stud threads and is recommended for conductor installation.

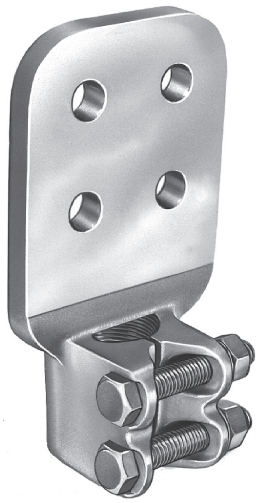

Material: **Casting**–356-T6 Aluminum Alloy
Stud Mounting Hardware – Aluminum Alloy

Note: To specify 90 degree connector, add suffix "90" to catalog number.
Example: ADSF141D389012

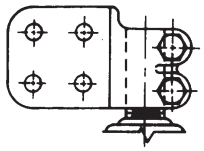

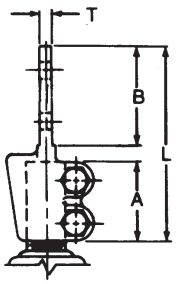

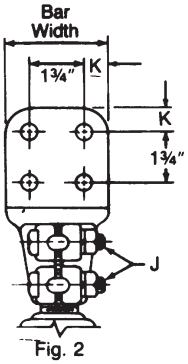

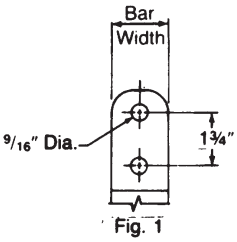

Product Data & Conductor Size

CATALOG NUMBER	STUD DIA./THD.	FIG. NO.	FLAT BAR WIDTH	DIMENSIONS INCHES (MM) L	A	B	T	J	K	APPROX. WT. EACH LBS. (KG)
ADSF101D3812	1 - 12	2	4	7-1/8 (180.98)	2 (50.8)	4-1/4 (107.95)	3/8 (9.52)	3/8 (9.52)	1-1/8 (28.58)	1.1 (.50)
ADSF111B23812	1-1/8 - 12	1	2	6-1/8 (155.58)	2 (50.8)	3-1/4 (82.55)	3/8 (9.52)	1/2 (12.7)	5/8 (15.88)	1.0 (.50)
ADSF111C3812	1-1/8 - 12	2	3	6-1/8 (155.58)	2 (50.8)	3-1/4 (82.55)	3/8 (9.52)	1/2 (12.7)	5/8 (15.88)	1.8 (.82)
ADSF111D3812	1-1/8 - 12	2	4	7 (177.8)	2 (50.8)	4-1/4 (107.95)	3/8 (9.52)	1/2 (12.7)	1-1/8 (28.58)	2.2 (1.0)
ADSF121C3812	1-1/4 - 12	2	3	6 (152.4)	2 (50.8)	3-1/4 (82.55)	3/8 (9.52)	1/2 (12.7)	5/8 (15.88)	1.9 (.86)
ADSF141C3812	1-1/2 - 12	2	3	6-1/4 (158.75)	2 (50.8)	3-1/4 (82.55)	3/8 (9.52)	1/2 (12.7)	5/8 (15.88)	2.3 (1.0)
ADSF141D3812	1-1/2 - 12	2	4	7-3/8 (187.32)	2 (50.8)	4-1/4 (107.95)	3/8 (9.52)	1/2 (12.7)	1-1/8 (28.58)	2.4 (1.1)
ADSF141D1212	1-1/2 - 12	2	4	7-3/8 (187.32)	2 (50.8)	4-1/4 (107.95)	1/2 (12.7)	1/2 (12.7)	1-1/8 (28.58)	2.6 (1.2)
ADSF141D3412	1-1/2 - 12	2	4	7 (177.8)	2 (50.8)	4-1/4 (107.95)	3/4 (19.05)	1/2 (12.7)	1-1/8 (28.58)	3.2 (1.45)
ADSF161D3812	1-3/4 - 12	2	4	7-3/8 (187.32)	2 (50.8)	4-1/4 (107.95)	3/8 (9.52)	1/2 (12.7)	1-1/8 (28.58)	4.0 (1.8)
ADSF201D1212	2 - 12	2	4	7-3/8 (187.32)	2 (50.8)	4-1/4 (107.95)	1/2 (12.7)	1/2 (12.7)	1-1/8 (28.58)	3.5 (1.6)
ADSF201D3412	2 - 12	2	4	7-3/8 (187.32)	2 (50.8)	4-1/4 (107.95)	3/4 (19.05)	1/2 (12.7)	1-1/8 (28.58)	4.0 (1.8)
ADSF301D3412	3 - 12	2	4	8-3/8 (212.72)	3 (76.2)	4-1/4 (107.95)	3/4 (19.05)	1/2 (12.7)	1-1/8 (28.58)	5.0 (2.3)

STUD CONNECTORS BOLTED ALUMINUM EXPANSION STUD TO TUBE

ALUMINUM

DSATL

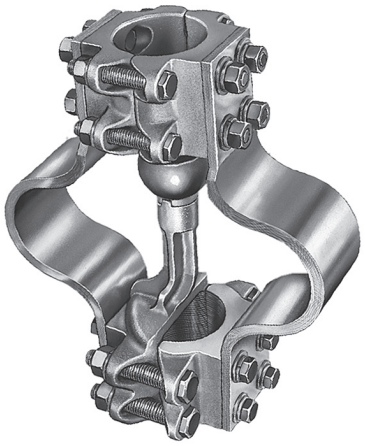

Aluminum and bronze alloy, expansion stud connector for connecting aluminum tubing to copper stud. Aluminum surfaces are assembled with contact sealant. Tubing guide ball and laminations are designed for use with standard (schedule 40 I.P.S.) tubing. Contact sealant is recommended.

Material: **Castings**—aluminum alloy—tube clamping and guide ball bronze alloy—stud clamping
Preformed laminated shunts—copper (tinned contacts)
Hardware–stainless steel and galvanized steel

Notes: (1) To specify 90 degree connector, add "90" to catalog number.
Example: DSATL1420G9012
(2) To specify extra heavy (schedule 80 EHIPS) tubing, add "H" to catalog number.
Example: DSATLH1420G12

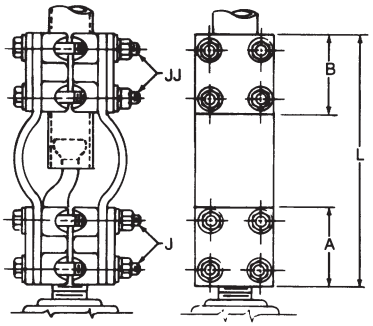

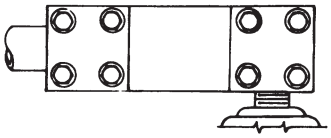

DSATL-90

SE 6

Product Data & Conductor Size

CATALOG NUMBER	STUD DIA./THD.	CONDUCTOR SIZE TUBING IPS	DIMENSIONS INCHES (MM) L	A	B	J	JJ	APPROX. WT. EACH LBS. (KG)
DSATL1110G12	1-1/8 - 12	1	12 (304.8)	3 (76.2)	2-3/4 (69.85)	1/2 (12.7)	1/2 (12.7)	10.8 (4.90)
DSATL1112G12	1-1/8 - 12	1-1/4	12 (304.8)	3 (76.2)	3 (76.2)	1/2 (12.7)	1/2 (12.7)	11.3 (5.12)
DSATL1114G12	1-1/8 - 12	1-1/2	12 (304.8)	3 (76.2)	3-1/4 (82.55)	1/2 (12.7)	1/2 (12.7)	11.5 (5.22)
DSATL1120G12	1-1/8 - 12	2	13-1/4 (336.55)	3 (76.2)	3-1/2 (88.9)	1/2 (12.7)	1/2 (12.7)	13.9 (6.30)
DSATL1210G12	1-1/4 - 12	1	12 (304.8)	3 (76.2)	2-3/4 (69.85)	1/2 (12.7)	1/2 (12.7)	10.9 (4.94)
DSATL1212G12	1-1/4 - 12	1-1/4	12 (304.8)	3 (76.2)	3 (76.2)	1/2 (12.7)	1/2 (12.7)	11.4 (5.17)
DSATL1214G12	1-1/4 - 12	1-1/2	12 (304.8)	3 (76.2)	3-1/4 (82.55)	1/2 (12.7)	1/2 (12.7)	12.0 (5.44)
DSATL1220G12	1-1/4 - 12	2	13 (330.2)	3 (76.2)	3-1/2 (88.9)	1/2 (12.7)	1/2 (12.7)	14.2 (6.44)
DSATL1410G12	1-1/2 - 12	1	13 (330.2)	3 (76.2)	2-3/4 (69.85)	1/2 (12.7)	1/2 (12.7)	11.8 (5.35)

Continued on next page.

STUD CONNECTORS BOLTED ALUMINUM EXPANSION STUD TO TUBE
Continued

Product Data & Conductor Size

CATALOG NUMBER	STUD DIA./THD.	CONDUCTOR SIZE TUBING IPS	DIMENSIONS INCHES (MM) L	A	B	J	JJ	APPROX. WT. EACH LBS. (KG)
DSATL1412G12	1-1/2 - 12	1-1/4	13 (330.2)	3 (76.2)	3 (76.2)	1/2 (12.7)	1/2 (12.7)	12.6 (5.72)
DSATL1414G12	1-1/2 - 12	1-1/2	13 (330.2)	3 (76.2)	3-1/4 (82.55)	1/2 (12.7)	1/2 (12.7)	12.8 (5.81)
DSATL1420G12	1-1/2 - 12	2	13 (330.2)	3 (76.2)	3 (76.2)	1/2 (12.7)	1/2 (12.7)	18.8 (8.53)
DSATL1424G12	1-1/2 - 12	2-1/2	13-3/8 (346.08)	3 (76.2)	3-3/4 (95.25)	1/2 (12.7)	1/2 (12.7)	24.4 (11.07)
DSATL1430G12	1-1/2 - 12	3	13 (330.2)	3 (76.2)	4 (101.6)	1/2 (12.7)	1/2 (12.7)	16.3 (7.39)
DSATL1614G12	1-3/4 - 12	1-1/2	13 (330.2)	3 (76.2)	3-1/4 (82.55)	1/2 (12.7)	1/2 (12.7)	13.2 (5.99)
DSATL1620G12	1-3/4 - 12	2	13 (330.2)	3 (76.2)	3-1/2 (88.9)	1/2 (12.7)	1/2 (12.7)	14.9 (6.76)
DSATL1630G12	1-3/4 - 12	3	13 (330.2)	3 (76.2)	4 (101.6)	1/2 (12.7)	1/2 (12.7)	16.8 (7.62)
DSATL2020G12	2 - 12	2	13 (330.2)	3 (76.2)	3-1/2 (88.9)	1/2 (12.7)	1/2 (12.7)	21.8 (9.89)
DSATL2024G12	2 - 12	2-1/2	13-1/4 (336.5)	3 (76.2)	3-3/4 (95.25)	1/2 (12.7)	1/2 (12.7)	28.3 (12.84)
DSATL2030G12	2 - 12	3	13 (330.2)	3 (76.2)	4 (101.6)	1/2 (12.7)	1/2 (12.7)	28.9 (13.11)
DSATL2034G12	2 - 12	3-1/2	13 (330.2)	3 (76.2)	4-1/4 (107.95)	1/2 (12.7)	1/2 (12.7)	30.3 (13.74)
DSATL2040G12	2 - 12	4	13-1/2 (342.9)	3 (76.2)	3-1/2 (88.9)	1/2 (12.7)	1/2 (12.7)	26.2 (11.88)
DSATL2420G12	2-1/2 - 12	2	13 (330.2)	3 (76.2)	3 (76.2)	1/2 (12.7)	1/2 (12.7)	25.2 (11.43)
DSATL2424G12	2-1/2 - 12	2-1/2	13 (330.2)	3 (76.2)	3-3/4 (95.25)	1/2 (12.7)	1/2 (12.7)	25.8 (11.70)
DSATL2430G12	2-1/2 - 12	3	13 (330.2)	3 (76.2)	4 (101.6)	1/2 (12.7)	1/2 (12.7)	26.4 (11.98)
DSATL2440G12	2-1/2 - 12	4	13 (330.2)	3 (76.2)	4 (101.6)	1/2 (12.7)	1/2 (12.7)	28.4 (12.88)
DSATL3020G12	3 - 12	2	13 (330.2)	3 (76.2)	3-3/4 (95.25)	1/2 (12.7)	1/2 (12.7)	20.3 (9.21)
DSATL3024G12	3 - 12	2-1/2	13-3/4 (349.22)	3 (76.2)	3-3/4 (95.25)	1/2 (12.7)	1/2 (12.7)	21.1 (9.57)
DSATL3030G12	3 - 12	3	13 (330.2)	3 (76.2)	4 (101.6)	1/2 (12.7)	1/2 (12.7)	30.9 (14.02)
DSATL3034G12	3 - 12	3-1/2	13 (330.2)	3 (76.2)	3 (76.2)	1/2 (12.7)	1/2 (12.7)	31.4 (14.24)
DSATL3040G12	3 - 12	4	13 (330.2)	3 (76.2)	4 (101.6)	1/2 (12.7)	1/2 (12.7)	34.4 (15.60)
DSATL3430G12	3-1/2 - 12	3	13 (330.2)	3 (76.2)	4 (101.6)	1/2 (12.7)	1/2 (12.7)	36.8 (16.69)
DSATL4030G12	4 - 12	3	13 (330.2)	3 (76.2)	4 (101.6)	1/2 (12.7)	1/2 (12.7)	38.9 (17.64)
DSATL4040G12	4 - 12	4	13 (330.2)	3 (76.2)	4 (101.6)	1/2 (12.7)	1/2 (12.7)	42.5 (19.28)

ALUMINUM

WSATL

STUD CONNECTORS BOLTED ALUMINUM WELDMENT EXPANSION STUD TO TUBE

Aluminum alloy weldment, expansion stud connector for connecting aluminum tubing to equipment stud. Designed for 3 one inch expansion. Specify "H" in catalog number (WSATLH-) if schedule 80 EHIPS tubing is to be used. Proper guide ball and lamination will be furnished. Copper clad aluminum transition plates are used between laminations and stud body.

Material:
- **Stud body & cap**—bronze alloy
- **Tubing body**—356-T6 aluminum alloy
- **Preformed laminated shunt**–aluminum
- **Guide Ball**—aluminum alloy
- **Shunt mounting hardware**—stainless steel

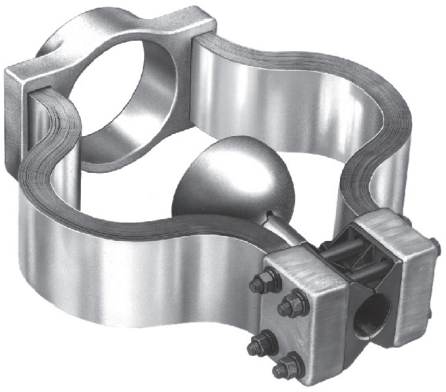

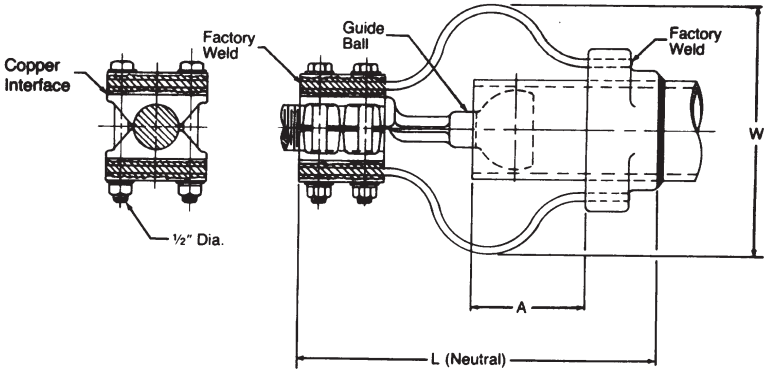

SE 8

Product Data & Conductor Size

CATALOG NUMBER	STUD DIA./THD.	ALUMINUM CONDUCTOR SIZE IPS	DIMENSIONS INCHES (MM)			APPROX. WT. EACH LBS. (KG)
			L	A	W	
WSATL1420G12	1-1/2 - 12	2	11-3/8 (288.92)	4-5/8 (117.48)	8-1/4 (209.55)	7.9 (3.58)
WSATL1424G12	1-1/2 - 12	2-1/2	11-3/8 (288.92)	4-1/2 (114.3)	8-3/8 (212.72)	8.3 (3.76)
WSATL1430G12	1-1/2 - 12	3	11-3/8 (288.92)	4-3/8 (111.12)	8-5/8 (219.08)	9.6 (4.35)
WSATL1434G12	1-1/2 - 12	3-1/2	11-3/8 (288.92)	4-5/8 (117.48)	9-3/8 (238.12)	11.2 (5.08)
WSATL2020G12	2 - 12	2	11-5/8 (295.28)	4-7/8 (123.82)	9 (228.6)	13.6 (6.17)
WSATL2030G12	2 - 12	3	11-5/8 (295.28)	4-1/2 (114.3)	9-1/2 (241.3)	15.1 (6.85)
WSATL2040G12	2 - 12	4	11-5/8 (295.28)	3-3/4 (95.25)	11-1/8 (282.58)	16.9 (7.66)

STUD CONNECTORS BOLTED BRONZE STUD TO CABLE

BRONZE
DSC

Bronze alloy stud connector for connecting copper cable to equipment stud. Clamping bolts have hexstops for one-wrench installation. All sizes furnished with reversible cable caps.

Material: **Castings**–Bronze Alloy
Hardware–Silicon Bronze or Stainless Steel

Note: To specify 90 degree connector, insert "90" into catalog number.
Example: DSC140509012

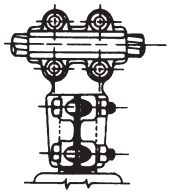

DSC-90

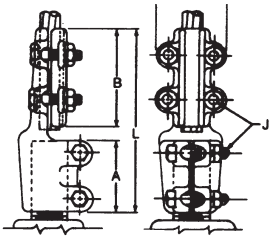

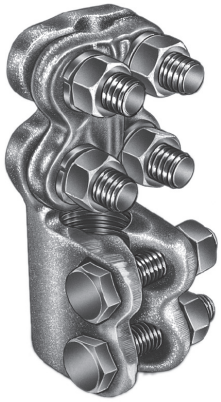

Product Data & Conductor Size

CATALOG NUMBER	STUD DIA./THD.	COPPER CONDUCTOR RANGE		DIMENSIONS INCHES (MM)					APPROX. WT. EACH LBS. (KG)
		CABLE	DIA.	L	A	B	W	J	
DSC04025133	1/2 - 13	#4-Sol.—250-MCM	.204 -.575 (5.18-14.6)	5-1/4 (133.35)	2-1/4 (57.15)	2-5/8 (66.68)	1-7/8 (47.62)	3/8 (9.52)	1.9 (.86)
DSC06025163	3/4 - 16	#4-Sol.—250-MCM	.204 -.575 (5.18-14.6)	5-1/8 (130.18)	2-1/4 (57.15)	2-1/2 (63.5)	1-7/8 (47.62)	3/8 (9.52)	2.0 (.91)
DSC10025143	1 - 14	#4-Sol.—250-MCM	.204 -.575 (5.18-14.6)	5-1/8 (130.18)	2-1/4 (57.15)	2-1/2 (63.5)	1-7/8 (47.62)	3/8 (9.52)	2.6 (1.18)
DSC10050143	1 - 14	1/0-Sol.—500-MCM	.325-.813 (8.26-20.65)	5-3/8 (136.52)	2-1/4 (57.15)	2-3/4 (69.85)	2-1/8 (53.98)	3/8 (9.52)	2.7 (1.22)
DSC1008014	1 - 14	2/0-Sol.—800-MCM	.365-1.031 (9.27-26.19)	5-3/8 (136.52)	2-1/4 (57.15)	2-3/4 (69.85)	2-7/8 (73.02)	1/2 (12.7)	4.6 (2.09)
DSC11025123	1-1/8 - 12	#4-Sol.—250-MCM	.204-.575 (5.18- -14.6)	5-1/8 (130.18)	2-1/4 (57.15)	2-1/2 (63.5)	1-7/8 (47.62)	3/8 (9.52)	2.3 (1.04)
DSC1102512	1-1/8 - 12	#4-Sol.—250-MCM	.204-.575 (5.18- -14.6)	5-1/4 (133.35)	2-1/4 (57.15)	2-1/2 (63.5)	2-3/8 (60.32)	1/2 (12.7)	3.7 (1.68)
DSC1105012	1-1/8 - 12	1/0-Sol.—500-MCM	.325-.813 (8.26-20.65)	5-1/2 (139.7)	2-1/4 (57.15)	2-3/4 (69.85)	2-1/2 (63.5)	1/2 (12.7)	4.3 (1.95)
DSC1108012	1-1/8 - 12	2/0-Sol.—800-MCM	.365-1.031 (9.27-26.19)	5-1/2 (139.7)	2-1/4 (57.15)	2-3/4 (69.85)	2-7/8 (73.02)	1/2 (12.7)	4.7 (2.13)
DSC12025123	1-1/4 - 12	#4-Sol.—250-MCM	.204 -.575 (5.18-14.6)	5-1/4 (133.35)	2-1/4 (57.15)	2-1/2 (63.5)	1-7/8 (47.62)	3/8 (9.52)	3.8 (1.72)
DSC12050123	1-1/4 - 12	1/0-Sol.—500-MCM	.325-.813 (8.26-20.65)	5-5/8 (142.88)	2-1/4 (57.15)	2-3/4 (69.85)	2-1/8 (53.98)	3/8 (9.52)	4.5 (2.04)
DSC1208012	1-1/4 - 12	2/0-Sol.—800-MCM	.365-1.031 (9.27-26.19)	5-1/2 (139.7)	2-1/4 (57.15)	2-3/4 (69.85)	2-7/8 (73.02)	1/2 (12.7)	5.4 (2.45)
DSC1210012	1-1/4 - 12	4/0-Str.—1000-MCM	.522-1.152 (13.26-29.26)	6-3/8 (161.92)	2-1/4 (57.15)	3-1/2 (88.9)	2-3/8 (60.32)	1/2 (12.7)	5.5 (2.49)
DSC14025123	1-1/2 - 12	#4-Sol.—250-MCM	.204 -.575 (5.18-14.6)	5-1/4 (133.35)	2-1/4 (57.15)	2-1/2 (63.5)	1-7/8 (47.62)	3/8 (9.52)	3.6 (1.63)
DSC1405012	1-1/2 - 12	1/0-Sol.—500-MCM	.325-.813 (8.26-20.65)	5-1/2 (139.7)	2-1/4 (57.15)	2-3/4 (69.85)	2-1/2 (63.5)	1/2 (12.7)	5.0 (2.27)
DSC1408012	1-1/2 - 12	2/0-Sol.—800-MCM	.365-1.031 (9.27-26.19)	5-3/8 (136.52)	2-1/4 (57.15)	2-3/4 (69.85)	2-7/8 (73.02)	1/2 (12.7)	5.5 (2.49)
DSC1410012	1-1/2 - 12	4/0-Str.—1000-MCM	.522-1.152 (13.26-29.26)	6-1/4 (158.75)	2-1/4 (57.15)	3-1/2 (88.9)	2-7/8 (73.02)	1/2 (12.7)	6.0 (2.72)
DSC1415012	1-1/2 - 12	250—1500-MCM	.574-1.412 (14.5 -35.86)	8 (203.2)	3-1/4 (82.55)	4-1/2 (114.3)	3-1/8 (79.38)	1/2 (12.7)	6.6 (2.99)

Continued on next page.

STUD CONNECTORS BOLTED BRONZE STUD TO CABLE (CONTINUED)

Product Data & Conductor Size

CATALOG NUMBER	STUD DIA./THD.	COPPER CONDUCTOR RANGE		DIMENSIONS INCHES (MM)					APPROX. WT. EACH LBS. (KG)
		CABLE	DIA.	L	A	B	W	J	
DSC1605012	1-3/4 - 12	1/0 Sol. — 500 MCM	.325- .813 (8.26- 20.65)	5-1/2 (139.7)	2-1/4 (57.15)	2-3/4 (69.85)	2-1/2 (63.5)	1/2 (12.7)	5.6 (2.54)
DSC1610012	1-3/4 - 12	4/0 Str. — 1000 MCM	.522- 1.152 (13.26- 29.26)	6-1/4 (158.75)	2-1/4 (57.15)	3-1/2 (88.9)	3 (76.2)	1/2 (12.7)	6.3 (2.86)
DSC2008012	2 - 12	2/0 Sol. — 800 MCM	.365- 1.031 (9.27- 26.19)	5-1/2 (139.7)	2-1/4 (57.15)	2-3/4 (69.85)	2-7/8 (73.02)	1/2 (12.7)	6.0 (2.72)
DSC2010012	2 - 12	4/0 Str. — 1000 MCM	.522- 1.152 (13.26- 29.26)	6-1/8 (155.58)	2-1/4 (57.15)	3-1/2 (88.9)	2-7/8 (73.02)	1/2 (12.7)	6.9 (3.13)
DSC2015012	2 - 12	250 — 1500 MCM	.574- 1.412 (14.58- 35.86)	6-3/4 (171.45)	2-1/4 (57.15)	3-3/4 (95.25)	3-3/8 (85.72)	1/2 (12.7)	8.6 (3.90)
DSC2020012	2 - 12	500 — 2000 MCM	.811- 1.632 (20.60- 41.45)	6-7/8 (174.62)	2-1/4 (57.15)	4 (101.6)	3-3/8 (85.72)	3/8 (9.52)	8.7 (3.95)
DSC2408012	2-1/2 - 12	2/0 Sol. — 800 MCM	.365- 1.031 (9.27- 26.19)	6-1/8 (155.58)	2-3/4 (69.85)	2-3/4 (69.85)	2-7/8 (73.02)	1/2 (12.7)	7.8 (3.54)
DSC2410012	2-1/2 - 12	4/0 Str. — 1000 MCM	.522- 1.152 (13.26- 29.26)	6-3/4 (171.45)	2-3/4 (69.85)	3-1/2 (88.9)	3 (76.2)	1/2 (12.7)	8.0 (3.63)
DSC3010012	3 - 12	4/0 Str. — 1000 MCM	.522- 1.152 (13.26- 29.26)	7-3/8 (187.32)	3-1/4 (82.55)	3-1/2 (88.9)	2-7/8 (73.02)	1/2 (12.7)	10.3 (4.67)
DSC3015012	3 - 12	250 — 1500 MCM	.574- 1.412 (14.58- 35.86)	7-5/8 (193.68)	3-1/4 (82.55)	3-3/4 (95.25)	3-3/8 (85.72)	1/2 (12.7)	12.0 (5.44)

STUD CONNECTORS BOLTED BRONZE STUD TO CABLE OR TUBE

BRONZE
DS

Bronze alloy stud connector for connecting copper cable or tube to equipment stud. A wide range of cable or a limited range of tubing may accommodate a straight or 90 degree connection.

Material: **Casting**–Bronze Alloy
Hardware – Silicon Bronze or Stainless Steel

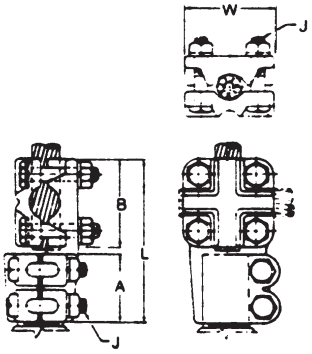

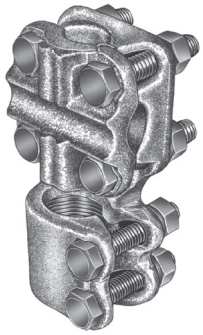

Product Data & Conductor Size

CATALOG NUMBER	STUD DIA./THD.	COPPER CONDUCTOR RANGE			DIMENSIONS INCHES (MM)					APPROX. WT. EACH LBS. (KG)
		CABLE	CABLE DIA.	TUBING IPS	L	A	B	W	J	
DS0605016	3/4 - 16	#6 Sol. — 500 MCM	.162-.813 (4.11- 20.65)	3/8 - 1/2	4-7/8 (123.82)	2-1/4 (57.15)	2-1/4 (57.15)	2-1/4 (57.15)	3/8 (9.52)	2.9 (1.32)
DS0610016	3/4 - 16	#2 Sol. — 1000 MCM	.258-1.152 (6.55- 29.26)	3/8 - 3/4	5-5/8 (142.88)	2-1/4 (57.15)	3 (76.2)	3 (76.2)	1/2 (12.7)	5.4 (2.45)
DS1002514	1 - 14	#6 Sol. — 250 MCM	.162- .575 (4.11- 14.60)	—	4-1/2 (114.3)	2-1/4 (57.15)	1-7/8 (47.62)	1-7/8 (47.62)	3/8 (9.52)	2.8 (1.27)
DS1005014	1 - 14	#6 Sol. — 500 MCM	.162-.813 (4.11- 14.60)	5/8 - 1/2	4-7/8 (123.82)	2-1/4 (57.15)	2-1/4 (57.15)	2-1/4 (57.15)	3/8 (9.52)	2.9 (1.32)
DS1010014	1 - 14	#2 Sol. — 1000 MCM	.258-1.152 (6.55- 29.26)	3/8 - 3/4	5-5/8 (142.88)	2-1/4 (57.15)	3 (76.2)	3 (76.2)	1/2 (12.7)	5.9 (2.68)
DS1102512	1-1/8 - 12	#6 Sol. — 250 MCM	.162- .575 (4.11- 14.60)	—	4-5/8 (117.48)	2-1/4 (57.15)	1-7/8 (47.62)	1-7/8 (47.62)	3/8 (9.52)	2.7 (1.22)
DS1105012	1-1/8 - 12	#6 Sol. — 500 MCM	.162-.813 (4.11- 20.65)	3/8 - 1/2	4-7/8 (123.82)	2-1/4 (57.15)	2-1/4 (57.15)	2-1/4 (57.15)	3/8 (9.52)	3.2 (1.45)
DS1110012	1-1/8 - 12	#2 Sol. — 1000 MCM	.258-1.152 (6.55- 29.26)	3/8 - 3/4	5-5/8 (142.88)	2-1/4 (57.15)	3 (76.2)	3 (76.2)	1/2 (12.7)	5.9 (2.68)
DS1120012	1-1/8 - 12	4/0 Sol. — 2000 MCM	.460- 1.632 (11.68- 41.45)	3/8 - 1-1/4	6-1/4 (158.75)	2-1/4 (57.15)	3-3/8 (85.72)	3-3/8 (85.72)	1/2 (12.7)	8.4 (3.81)
DS1202512	1-1/4 - 12	#6 Sol. — 250 MCM	.162- .575 (4.11- 14.60)	—	4-5/8 (117.48)	2-1/4 (57.15)	1-7/8 (47.62)	1-7/8 (47.62)	3/8 (9.52)	3.3 (1.50)
DS1205012	1-1/4 - 12	#6 Sol. — 500 MCM	.162-.813 (4.11- 20.65)	3/8 - 1/2	4-7/8 (123.82)	2-1/4 (57.15)	2-1/4 (57.15)	2-1/4 (57.15)	3/8 (9.52)	3.7 (1.68)
DS1210012	1-1/4 - 12	#2 Sol. — 1000 MCM	.258-1.152 (6.55- 29.26)	3/8 - 3/4	5-5/8 (142.88)	2-1/4 (57.15)	3 (76.2)	3 (76.2)	1/2 (12.7)	6.5 (2.95)
DS1402512	1-1/2 - 12	#6 Sol. — 250 MCM	.162- .575 (4.11- 14.60)	—	4-1/2 (114.3)	2-1/4 (57.15)	1-7/8 (47.62)	1-7/8 (47.62)	3/8 (9.52)	3.6 (1.63)
DS1405012	1-1/2 - 12	#6 Sol. — 500 MCM	.162-.813 (4.11- 14.60)	3/8 - 1/2	5 (127.0)	2-1/4 (57.15)	2-1/4 (57.15)	2-1/4 (57.15)	3/8 (9.52)	3.9 (1.77)
DS1410012	1-1/2 - 12	#2 Sol. — 1000 MCM	.258-1.152 (6.55- 29.26)	3/8 - 3/4	5-5/8 (142.88)	2-1/4 (57.15)	3 (76.2)	3 (76.2)	1/2 (12.7)	7.0 (3.18)
DS1420012	1-1/2 - 12	4/0 Sol. — 2000 MCM	.460- 1.632 (11.68- 41.45)	3/8 - 1-1/4	6-1/8 (155.58)	2-1/4 (57.15)	3-3/8 (85.72)	3-3/8 (85.72)	1/2 (12.7)	9.1 (4.13)
DS1620012	1-3/4 - 12	4/0 Sol. — 2000 MCM	.460- 1.632 (11.68- 41.45)	3/8 - 1-1/4	6-1/8 (155.58)	2-1/4 (57.15)	3-3/8 (85.72)	3-3/8 (85.72)	1/2 (12.7)	9.3 (4.22)
DS2010012	2 - 12	#2 Sol. — 1000 MCM	.258-1.152 (6.55- 29.26)	3/8 - 3/4	6-1/4 (158.75)	2-1/4 (57.15)	3-3/8 (85.72)	3-3/8 (85.72)	1/2 (12.7)	9.2 (4.17)
DS2020012	2 - 12	4/0 Sol. — 2000 MCM	.460- 1.632 (11.68- 41.45)	3/8 - 1-1/4	6-1/4 (158.75)	2-1/4 (57.15)	3-3/8 (85.72)	3-3/8 (85.72)	1/2 (12.7)	9.5 (4.31)

BRONZE

D2S

STUD CONNECTORS BOLTED BRONZE STUD TO TWO CABLES OR TUBES

Bronze alloy stud connector for connecting two copper cables or tubes to equipment stud. A wide range of cable or a limited range of tubing may accommodate straight or 90 degree connections. Clamping bolts have hex-stops for one-wrench installation.

Material: **Casting**–Bronze Alloy
Hardware – Silicon Bronze or Stainless Steel

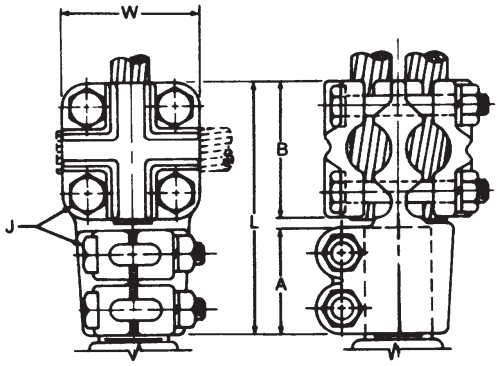

Product Data & Conductor Size

CATALOG NUMBER	STUD DIA./THD.	COPPER CONDUCTOR RANGE			DIMENSIONS INCHES (MM)					APPROX. WT. EACH LBS. (KG)
		CABLE	CABLE DIA.	TUBING IPS	L	A	B	W	J	
D2S0605016	3/4 - 16	#6 Sol. — 500 MCM	.162-.813 (4.11- 20.65)	3/8 - 1/2	4-7/8 (123.82)	2-1/4 (57.15)	2-1/4 (57.15)	2-1/4 (57.15)	3/8 (9.52)	2.9 (1.32)
D2S1005014	1 - 14	#6 Sol. — 500 MCM	.162-.813 (4.11- 20.65)	3/8 - 1/2	4-3/4 (120.65)	2-1/4 (57.15)	2-1/4 (57.15)	2-1/4 (57.15)	3/8 (9.52)	3.4 (1.54)
D2S1010014	1 - 14	#2 Sol. — 1000 MCM	.258-1.152 (6.55- 29.26)	3/8- 3/4	5-3/4 (146.05)	2-1/4 (57.15)	3 (76.2)	3 (76.2)	1/2 (12.7)	7.0 (3.18)
D2S1105012	1-1/8 - 12	#6 Sol. — 500 MCM	.162-.813 (4.11- 14.60)	3/8 - 1/2	4-7/8 (123.82)	2-1/4 (57.15)	2-1/4 (57.15)	2-1/4 (57.15)	3/8 (9.52)	3.5 (1.59)
D2S1110012	1-1/8 - 12	#2 Sol. — 1000 MCM	.258-1.152 (6.55- 29.26)	3/8 - 3/4	5-5/8 (142.88)	2-1/4 (57.15)	3 (76.2)	3 (76.2)	1/2 (12.7)	7.1 (3.22)
D2S1210012	1-1/4 - 12	#2 Sol. — 1000 MCM	.258-1.152 (6.55- 29.26)	3/8- 3/4	5-5/8 (142.88)	2-1/4 (57.15)	3 (76.2)	3 (76.2)	1/2 (12.7)	7.3 (3.31)
D2S1405012	1-1/2 - 12	#6 Sol. — 500 MCM	.162-.813 (4.11- 20.65)	3/8 - 1/2	4-7/8 (123.82)	2-1/4 (57.15)	2-1/4 (57.15)	2-1/4 (57.15)	3/8 (9.52)	4.3 (1.95)
D2S1410012	1-1/2 - 12	#2 Sol. — 1000 MCM	.258-1.152 (6.55- 29.26)	3/8 - 3/4	5-3/4 (146.05)	2-1/4 (57.15)	3 (76.2)	3 (76.2)	1/2 (12.7)	7.7 (3.49)
D2S1420012	1-1/2 - 12	4/0 Sol. — 2000 MCM	.460- 1.632 (11.68- 41.45)	3/8 - 1-1/4	6-1/8 (155.58)	2-1/4 (57.15)	3-3/8 (85.72)	3-3/8 (85.72)	1/2 (12.7)	10.7 (4.85)
D2S1610012	1 -3/4 - 12	#2 Sol. — 1000 MCM	.258-1.152 (6.55- 29.26)	3/8- 3/4	5-3/4 (146.05)	2-1/4 (57.15)	3 (76.2)	3 (76.2)	1/2 (12.7)	7.9 (3.58)
D2S2010012	2 - 12	#2 Sol. — 1000 MCM	.258-1.152 (6.55- 29.26)	3/8- 3/4	6 (152.4)	2-1/4 (57.15)	3 (76.2)	3 (76.2)	1/2 (12.7)	8.7 (3.95)
D2S2020012	2 - 12	4/0 Sol. — 2000 MCM	.460- 1.632 (11.68- 41.45)	3/8 - 1-1/4	6-1/4 (158.75)	2-1/4 (57.15)	3-3/8 (85.72)	3-3/8 (85.72)	1/2 (12.7)	11.1 (5.03)
D2S3020012	3 - 12	4/0 Sol. — 2000 MCM	.460- 1.632 (11.68- 41.45)	3/8 - 1-1/4	7-1/8 (180.98)	3-1/4 (82.55)	3-3/8 (85.72)	3-3/8 (85.72)	1/2 (12.7)	14.9 (6.76)

STUD CONNECTORS BOLTED BRONZE STUD TO TUBE

BRONZE
DST

Bronze alloy stud connector for connecting copper tubing to equipment stud. Clamping bolts have hex-stops for one-wrench installation.

Material: **Castings**—Bronze Alloy
Hardware–Silicon Bronze or Stainless Steel

Note: To specify 90 degree connector, add "90" into catalog number.
Example: DST11149012

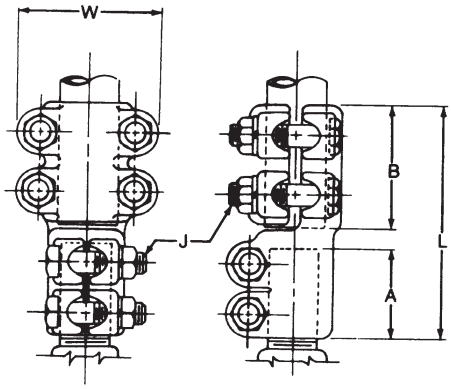

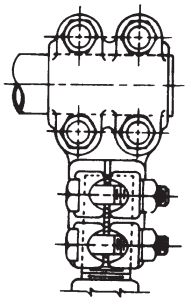

DST-90

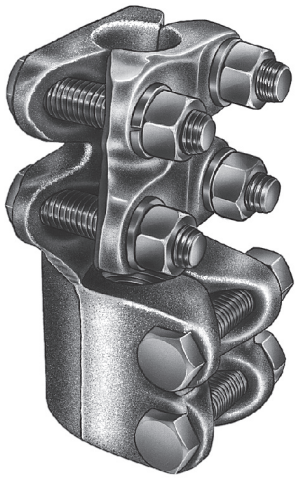

Product Data & Conductor Size

CATALOG NUMBER	STUD DIA./THD.	CONDUCTOR SIZE TUBING IPS	DIMENSIONS INCHES (MM) L	A	B	W	J	APPROX. WT. EACH LBS. (KG)
DST101214	1 - 14	1-1/4	5-1/4 (133.35)	2 (50.8)	2-1/2 (63.5)	3-1/4 (82.55)	1/2 (12.7)	5.0 (2.27)
DST1106123	1-1/8 - 12	3/4	5-5/8 (142.88)	2 (50.8)	2-3/4 (69.85)	3-5/8 (92.08)	3/8 (9.52)	5.3 (2.40)
DST111012	1-1/8 - 12	1	5 (127.0)	2 (50.8)	2-1/2 (63.5)	2-1/2 (63.5)	3/8 (9.52)	4.9 (2.22)
DST111412	1-1/8 - 12	1-1/2	5-1/2 (139.7)	2 (50.8)	2-3/4 (69.85)	3-3/4 (95.25)	1/2 (12.7)	5.4 (2.45)
DST140612	1-1/2 - 12	3/4	5-1/4 (133.35)	2 (50.8)	2-1/2 (63.5)	3 (76.2)	1/2 (12.7)	5.5 (2.49)
DST141012	1-1/2 - 12	1	5-1/4 (133.35)	2 (50.8)	2-1/2 (63.5)	3-1/4 (82.55)	1/2 (12.7)	5.8 (2.63)
DST141212	1-1/2 - 12	1-1/4	5-1/4 (133.35)	2 (50.8)	2-1/2 (63.5)	3-1/4 (82.55)	1/2 (12.7)	6.1 (2.77)
DST141412	1-1/2 - 12	1-1/2	5-1/2 (139.7)	2 (50.8)	2-3/4 (69.85)	3-5/8 (92.08)	1/2 (12.7)	6.8 (3.08)
DST142012	1-1/2 - 12	2	5-1/2 (139.7)	2 (50.8)	2-3/4 (69.85)	3-7/8 (98.42)	1/2 (12.7)	7.3 (3.31)
DST201212	2 - 12	1-1/4	5-5/8 (142.88)	2 (50.8)	2-3/4 (69.85)	3-5/8 (92.08)	1/2 (12.7)	7.0 (3.18)
DST201412	2 - 12	1-1/2	5-5/8 (142.88)	2 (50.8)	2-3/4 (69.85)	3-1/8 (79.38)	1/2 (12.7)	7.7 (3.49)
DST202012	2 - 12	2	5-5/8 (142.88)	2 (50.8)	2-7/8 (73.02)	3-3/4 (95.25)	1/2 (12.7)	8.5 (3.86)
DST202412	2 - 12	2-1/2	6-1/8 (155.58)	2 (50.8)	3-1/4 (82.55)	4-1/2 (114.3)	1/2 (12.7)	12.9 (5.85)

STUD CONNECTORS BOLTED BRONZE EXPANSION STUD TO TUBE

BRONZE
DSTL

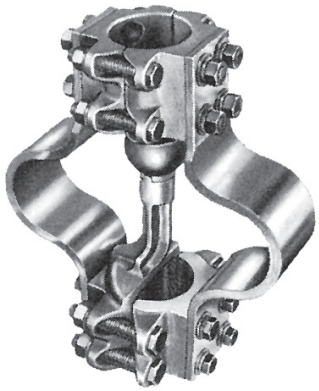

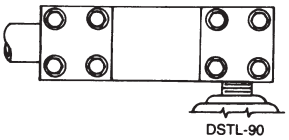

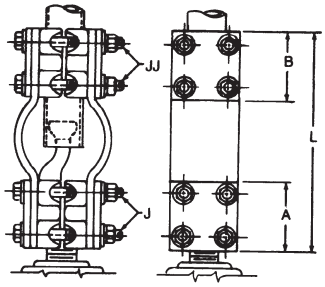

Bronze alloy expansion stud connector for connecting copper tubing to equipment stud.

Material: **Castings**—Bronze Alloy
Factory formed laminated shunts–copper (tinned contacts)
Hardware–Stainless Steel or Silicon Bronze

Notes:
(1) To specify braided shunt, replace "L" in catalog number with the letter "F".
Example: DSTF1110G12
(2) To specify 90 degree connector, add "90" to catalog number.
Example: DSTL110G9012

Product Data & Conductor Size

CATALOG NUMBER	STUD DIA./THD.	CONDUCTOR SIZE	DIMENSIONS INCHES (MM)					APPROX. WT. EACH LBS. (KG)
		TUBING IPS	L	A	B	J	JJ	
DSTL1012G14	1 - 14	1-1/4	12 (304.8)	3 (76.2)	3 (76.2)	1/2 (12.7)	1/2 (12.7)	12.0 (5.44)
DSTL1014G14	1 - 14	1-1/2	12 (304.8)	3 (76.2)	3 (76.2)	1/2 (12.7)	1/2 (12.7)	12.8 (5.81)
DSTL1110G12	1 -1/8 - 12	1	12 (304.8)	3 (76.2)	3 (76.2)	1/2 (12.7)	1/2 (12.7)	12.5 (5.67)
DSTL1112G12	1 -1/8 - 12	1-1/4	12 (304.8)	3 (76.2)	3 (76.2)	1/2 (12.7)	1/2 (12.7)	13.8 (6.26)
DSTL1114G12	1 -1/8 - 12	1-1/2	12 (304.8)	3 (76.2)	3 (76.2)	1/2 (12.7)	1/2 (12.7)	14.1 (6.40)
DSTL1120G12	1 -1/8 - 12	2	12 (304.8)	3 (76.2)	3 (76.2)	1/2 (12.7)	1/2 (12.7)	18.7 (8.48)
DSTL1124G12	1 -1/8 - 12	2-1/2	12 (304.8)	3 (76.2)	3 (76.2)	1/2 (12.7)	1/2 (12.7)	19.4 (8.80)
DSTL1206G12	1 -1/4 - 12	3/4	12-1/2 (317.5)	3 (76.2)	3 (76.2)	1/2 (12.7)	1/2 (12.7)	12.8 (5.81)
DSTL1406G12	1-1/2 - 12	3/4	13 (330.2)	3 (76.2)	3 (76.2)	1/2 (12.7)	1/2 (12.7)	14.1 (6.40)
DSTL1410G12	1-1/2 - 12	1	13 (330.2)	3 (76.2)	3 (76.2)	1/2 (12.7)	1/2 (12.7)	19.5 (8.84)
DSTL1412G12	1-1/2 - 12	1-1/4	13 (330.2)	3 (76.2)	3 (76.2)	1/2 (12.7)	1/2 (12.7)	20.5 (9.07)
DSTL1414G12	1-1/2 - 12	1-1/2	13 (330.2)	3 (76.2)	3 (76.2)	1/2 (12.7)	1/2 (12.7)	21.7 (9.84)
DSTL1420G12	1-1/2 - 12	2	13 (330.2)	3 (76.2)	3 (76.2)	1/2 (12.7)	1/2 (12.7)	22.8 (10.34)
DSTL1424G12	1-1/2 - 12	2-1/2	13 (330.2)	3 (76.2)	3 (76.2)	1/2 (12.7)	1/2 (12.7)	27.0 (12.25)
DSTL2020G12	2 - 12	2	13 (330.2)	3 (76.2)	3 (76.2)	1/2 (12.7)	1/2 (12.7)	24.0 (10.89)

Continued on next page.

STUD CONNECTORS BOLTED BRONZE EXPANSION STUD TO TUBE (CONTINUED)

Product Data & Conductor Size

CATALOG NUMBER	STUD DIA./THD.	CONDUCTOR SIZE	DIMENSIONS INCHES (MM)					APPROX. WT. EACH LBS. (KG)
		TUBING IPS	L	A	B	J	JJ	
DSTL2024G12	2 - 12	2-1/2	13 (330.2)	3 (76.2)	3 (76.2)	1/2 (12.7)	1/2 (12.7)	26.7 (12.11)
DSTL2030G12	2 - 12	3	12-7/8 (327.02)	3 (76.2)	3 (76.2)	1/2 (12.7)	1/2 (12.7)	31.8 (14.42)
DSTL2034G12	2 - 12	3-1/2	13 (330.2)	3 (76.2)	3 (76.2)	1/2 (12.7)	1/2 (12.7)	36.2 (18.42)
DSTL3014G12	3 - 12	1-1/2	13 (330.2)	3 (76.2)	3 (76.2)	1/2 (12.7)	1/2 (12.7)	27.9 (12.66)
DSTL3020G12	3 - 12	2	13 (330.2)	3 (76.2)	3 (76.2)	1/2 (12.7)	1/2 (12.7)	31.2 (14.15)
DSTL3024G12	3 - 12	2-1/2	13 (330.2)	3 (76.2)	3 (76.2)	1/2 (12.7)	1/2 (12.7)	36.3 (16.47)
DSTL3030G12	3 - 12	3	13 (330.2)	3 (76.2)	3 (76.2)	1/2 (12.7)	1/2 (12.7)	42.4 (19.23)

STUD CONNECTORS BOLTED BRONZE STUD TO FLAT BAR

BRONZE

HDSF

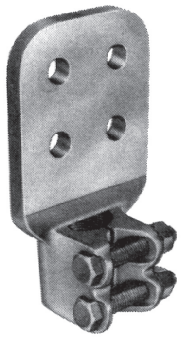

Bronze alloy stud connector for connecting copper flat pad to copper stud. Tongue holes have NEMA hole spacing with contact surface on both sides.

Material: **Casting**–Bronze Alloy
Hardware–Silicon Bronze or Stainless Steel

Note: To specify 90 degree connector, insert "90" into catalog number.
Example: HDSF1413389012

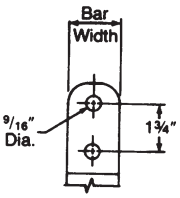

Fig. 1

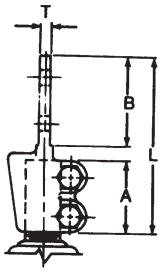

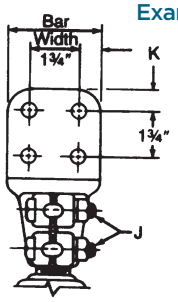

Fig. 2

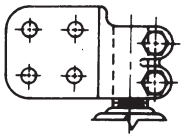

HDSF-90

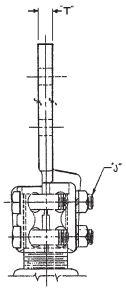

Fig. 3

Product Data & Conductor Size

CATALOG NUMBER	STUD DIA./THD.	FIG. NO.	FLAT BAR WIDTH	DIMENSIONS INCHES (MM)						APPROX. WT. EACH LBS. (KG)
				L	A	B	T	J	K	
HDSF061216	3/4 - 16	1	2	6-1/8 (155.58)	2 (50.8)	3-1/4 (82.55)	1/4 (6.35)	3/8 (9.52)	5/8 (15.88)	2.1 (.95)
HDSF061316	3/4 - 16	2	3	6-1/8 (155.58)	2 (50.8)	3-1/4 (82.55)	1/4 (6.35)	3/8 (9.52)	5/8 (15.88)	2.3 (1.04)
HDSF10123814	1 - 14	1	2	6-1/8 (155.58)	2 (50.8)	3-1/4 (82.55)	3/8 (9.52)	3/8 (9.52)	5/8 (15.88)	3.1 (1.41)
HDSF10133814	1 - 14	2	3	6-1/4 (158.75)	2 (50.8)	3-1/4 (82.55)	3/8 (9.52)	3/8 (9.52)	5/8 (15.88)	3.3 (1.50)
HDSF11123812	1-1/8 - 12	1	2	6-1/8 (155.58)	2 (50.8)	3-1/4 (82.55)	3/8 (9.52)	1/2 (12.7)	5/8 (15.88)	2.9 (1.32)
HDSF11133812	1-1/8 - 12	2	3	6-1/8 (155.58)	2 (50.8)	3-1/4 (82.55)	3/8 (9.52)	1/2 (12.7)	5/8 (15.88)	3.5 (1.59)
HDSF111D3812	1-1/8 - 12	2	4	7-1/8 (180.98)	2 (50.8)	4-1/4 (107.95)	3/8 (9.52)	1/2 (12.7)	1-1/8 (28.58)	5.1 (2.31)
HDSF12123812	1-1/4 - 12	1	2	6-3/8 (161.92)	2 (50.8)	3-1/4 (82.55)	3/8 (9.52)	1/2 (12.7)	5/8 (15.88)	3.6 (1.63)
HDSF12133812	1-1/4 - 12	2	3	6-3/8 (161.92)	2 (50.8)	3-1/4 (82.55)	3/8 (9.52)	1/2 (12.7)	5/8 (15.88)	4.8 (2.18)
HDSF121D3812	1-1/4 - 12	3	4	7-1/4 (184.15)	2 (50.8)	4-1/8 (104.78)	3/8 (9.52)	1/2 (12.7)	1-1/8 (28.58)	5.3 (2.40)
HDSF14121212	1-1/2 - 12	1	2	6-3/8 (161.92)	2 (50.8)	3-1/4 (82.55)	1/2 (12.7)	1/2 (12.7)	5/8 (15.88)	4.0 (1.81)
HDSF14123812	1-1/2 - 12	1	2	6-3/8 (161.92)	2 (50.8)	3-1/4 (82.55)	3/8 (9.52)	1/2 (12.7)	5/8 (15.88)	4.0 (1.81)
HDSF14133812	1-1/2 - 12	3	3	6-3/8 (161.92)	2 (50.8)	3-1/8 (79.38)	3/8 (9.52)	1/2 (12.7)	5/8 (15.88)	4.3 (1.95)
HDSF141D1212	1-1/2 - 12	3	4	7-3/8 (187.32)	2 (50.8)	4-1/8 (104.78)	1/2 (12.7)	1/2 (12.7)	1-1/8 (28.58)	5.2 (2.36)
HDSF16131212	1-3/4 - 12	2	3	6-3/8 (161.92)	2 (50.8)	3-1/4 (82.55)	1/2 (12.7)	1/2 (12.7)	5/8 (15.88)	5.9 (2.68)

Continued on next page.

STUD CONNECTORS BOLTED BRONZE STUD TO FLAT BAR (CONTINUED)

Product Data & Conductor Size

CATALOG NUMBER	STUD DIA./THD.	FIG. NO.	FLAT BAR WIDTH	DIMENSIONS INCHES (MM)						APPROX. WT. EACH LBS. (KG)
				L	A	B	T	J	K	
HDSF161D1212	1-3/4 - 12	2	4	7-3/8 (187.32)	2 (50.8)	4-1/4 (107.95)	1/2 (12.7)	1/2 (12.7)	1-1/8 (28.58)	6.6 (2.99)
HDSF20131212	2 - 12	2	3	6-3/8 (161.92)	2 (50.8)	3-1/4 (82.55)	1/2 (12.7)	1/2 (12.7)	5/8 (15.88)	5.5 (2.45)
HDSF201D1212	2 - 12	3	4	7-3/8 (187.32)	2 (50.8)	4-1/8 (104.78)	1/2 (12.7)	1/2 (12.7)	1-1/8 (28.58)	7.3 (3.31)
HDSF22131212	2-1/4 - 12	2	3	6-3/8 (161.92)	2 (50.8)	3-1/4 (82.55)	1/2 (12.7)	1/2 (12.7)	5/8 (15.88)	6.7 (3.04)
HDSF221D1212	2-1/4 - 12	2	4	7-3/8 (187.32)	2 (50.8)	4-1/4 (107.95)	1/2 (12.7)	1/2 (12.7)	1-1/8 (28.58)	10.2 (4.63)
HDSF24131212	2-1/2 - 12	2	3	6-7/8 (174.62)	2-1/2 (63.5)	3-1/4 (82.55)	1/2 (12.7)	1/2 (12.7)	5/8 (15.88)	7.8 (3.54)
HDSF241D1212	2-1/2 - 12	2	4	7-7/8 (200.02)	2-1/2 (63.5)	4-1/4 (107.95)	1/2 (12.7)	1/2 (12.7)	1-1/8 (28.58)	10.9 (4.94)
HDSF301D3412	3 - 12	2	4	8-3/8 (212.72)	3 (76.2)	4-1/4 (107.95)	3/4 (19.05)	5/8 (15.88)	5/8 (15.88)	13.6 (6.17)
HDSF321D3412	3-1/4 - 12	2	4	8-5/8 (219.08)	3 (76.2)	4-1/4 (107.95)	3/4 (19.05)	5/8 (15.88)	5/8 (15.88)	14.2 (6.44)
HDSF401D112	4 - 12	2	4	9 (228.6)	3-5/8 (92.08)	4-1/4 (107.95)	1 (25.4)	5/8 (15.88)	1-1/8 (28.58)	19 (8.62)
HDSF501D112	5 - 12	2	4	9-1.8 (231.8)	3-1/2 (89.9)	4-1/4 (107.95)	1 (25.4)	5/8 (15.88)	1-1/8 (28.58)	35.5 (16.1)

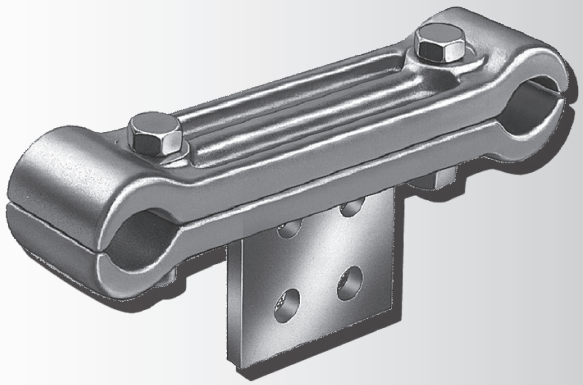

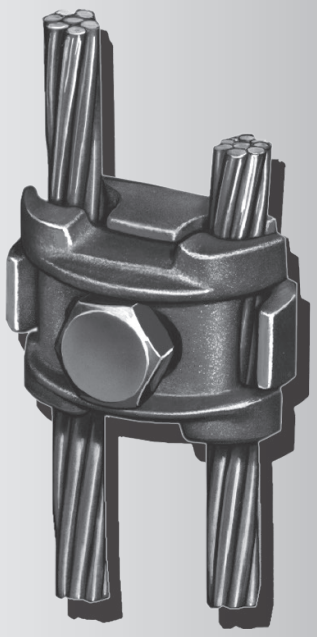

SECTION SF

MISCELLANEOUS & GROUNDING

- Bus Tube End Plugs
- Bus Cable Spacers
- Shunts
- Transition Plate
- Adapters
- Ground Clamps
- Grounding Stirrup Clamps
- Grounding Stud

MISCELLANEOUS & GROUNDING

BI-METALLIC
TP ..... TRANSITION PLATE SF-11

WELDMENT/ALUMINUM
WEB ..... END PLUG, INTERNAL SF-1
WTESR ..... GROUNDING STUD SF-31

DRIVE FIT/ALUMINUM
ACB ..... CORONA END CAP FOR ALUMINUM TUBING SF-2
ACBI ..... CORONA END CAP FOR ALUMINUM TUBING SF-3

DRIVE FIT/BRONZE
BCB ..... CORONA END CAP FOR COPPER TUBING SF-4
CBI ..... CORONA END PLUG FOR COPPER TUBING SF-5

BOLTED/ALUMINUM
ACHLS ..... STIRRUP CLAMP, ALUM CABLE TO TINNED COPPER LOOP SF-29
APCS ..... CABLE SPACERS SF-6
APCSF ..... CABLE SPACER TERMINAL SF-7
ATHLS ..... STIRRUP CLAMP, ALUM TUBING TO TINNED COPPER LOOP SF-30

BOLTED/COPPER
FB ..... BRAIDED SHUNT SF-9
FS ..... LAMINATED SHUNT SF-10
GB ..... FLEXIBLE GROUNDING BRAID SF-28

BOLTED/GALVANIZED STEEL
AD ..... INSULATOR HEIGHT ADAPTER SF-13
BA ..... BOLT CIRCLE AND HEIGHT ADAPTER SF-14

BOLTED/BRONZE
BPCS ..... CABLE SPACER SF-8
GC ..... GROUND CLAMP SF-15
GC103 ..... GROUND CLAMP, CABLE TO ROD SF-16
GC109 ..... GROUND CLAMP, FLEXIBLE BRAID TO ROD OR TUBE SF-27
GC110 ..... GROUND CLAMP, ONE,TWO, OR THREE CABLES TO ROD OR TUBE SF-21
GC111 ..... GROUND CLAMP, CABLE TO ROD OR TUBE SF-17
GC113 ..... GROUND CLAMP, CABLE TO CABLE (CROSS CONNECTOR) SF-26
GC115 ..... GROUND CLAMP, TWO CABLES TO ROD OR TUBE SF-19
GC140 ..... GROUND CLAMP, CABLE TO FLAT SF-23
GC141 ..... GROUND CLAMP, CABLE TO FLAT SF-24
GC143 ..... GROUND CLAMP, TWO CABLES TO FLAT SF-25
IFA ..... BOLT CIRCLE ADAPTER SF-12

MISCELLANEOUS AND GROUNDING ALUMINUM WELDMENT END PLUG INTERNAL

ALUMINUM
WEB

Aluminum alloy, weldment, internal end plug for tubing.

Material: Casting–356-T6 aluminum alloy

Note: To specify extra heavy (Schedule 80, EHIPS) tubing, add "H" to catalog number.
Example: WEBH30.

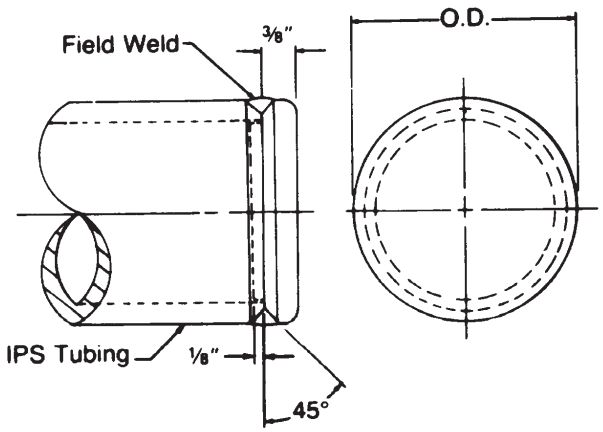

Product Data & Conductor Size

CATALOG NUMBER	CONDUCTOR SIZE		APPROX. WT. EACH LBS. (KG)
	IPS	O.D. IN INCHES	
WEB10	1	1-5/16	.06 (.03)
WEB12	1-1/4	1-21/32	.10 (.04)
WEB14	1-1/2	1-29/32	.13 (.06)
WEB20	2	2-3/8	.19 (.09)
WEB24	2-1/2	2-7/8	.26 (.12)
WEB30	3	3-1/2	.41 (.18)
WEB34	3-1/2	4	.54 (.24)
WEB40	4	4-1/2	.68 (.31)
WEB50	5	5-9/16	1.1 (.50)
WEB60	6	6-5/8	1.5 (.68)

ALUMINUM

ACB

MISCELLANEOUS AND GROUNDING ALUMINUM CORONA END CAP FOR ALUMINUM TUBING

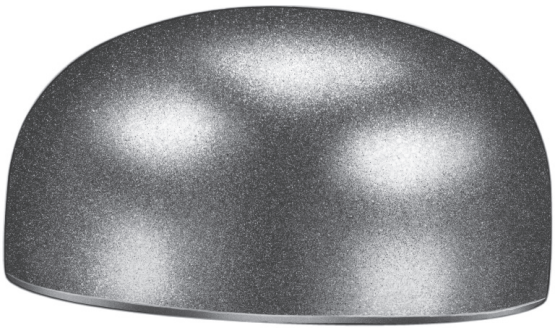

Aluminum external, corona end cap for reducing electrostatic loss and enclosing tubing ends. Cap is designed for tapered drive fit or can be welded if desired.

Material: 356-T6 aluminum alloy.

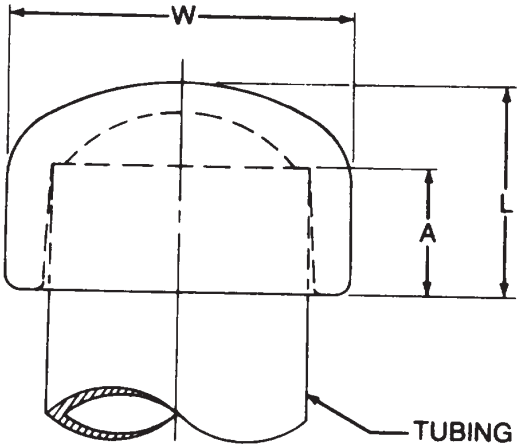

Product Data & Conductor Size

CATALOG NUMBER	ALUMINUM CONDUCTOR SIZE TUBING IPS/EHIPS	DIMENSIONS INCHES (MM)			APPROX. WT. EACH LBS. (KG)
		L	A	W	
ACB10	1	1-3/8 (34.92)	7/8 (22.22)	1-7/8 (47.62)	.35 (.16)
ACB12	1-1/4	1-1/2 (38.1)	1 (25.4)	2-1/4 (57.15)	.55 (.25)
ACB14	1-1/2	1-5/8 (41.28)	1 (25.4)	2-5/8 (66.68)	.65 (.29)
ACB20	2	1-3/4 (44.45)	1 (25.4)	3-1/8 (79.38)	.80 (.36)
ACB24	2-1/2	1-7/8 (47.62)	1 (25.4)	3-5/8 (92.08)	.65 (.29)
ACB30	3	2-1/8 (53.93)	1-1/8 (28.58)	4-1/4 (107.95)	2.2 (1.0)
ACB34	3-1/2	2-3/8 (60.32)	1-1/4 (31.75)	4-7/8 (123.82)	2.5 (1.13)
ACB40	4	2-1/2 (63.5)	1-1/4 (31.75)	5-3/8 (136.52)	2.9 (1.32)
ACB50	5	3 (76.2)	1-1/2 (38.1)	6-3/8 (161.92)	4.6 (2.09)

MISCELLANEOUS AND GROUNDING ALUMINUM CORONA END PLUG FOR ALUMINUM TUBING

ALUMINUM
ACBI

Aluminum internal, corona end plug for reducing electrostatic loss and enclosing tubing end. Plug is designed for drive fit with tapered internal fingers.

Material: 356-T6 aluminum alloy

Note: To specify extra heavy (Schedule 80, EHIPS) tubing, add "H" to catalog number.
Example: ACBIH12.

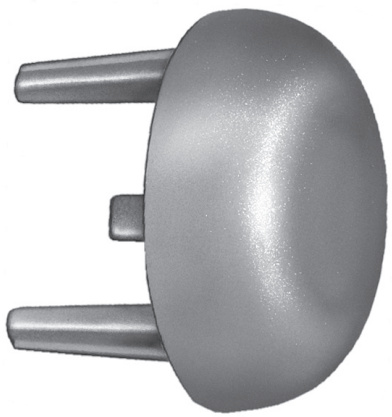

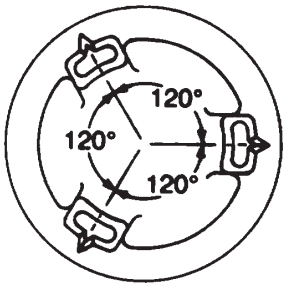

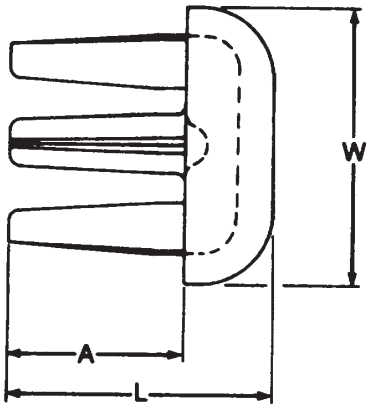

Product Data & Conductor Size

CATALOG NUMBER	ALUMINUM CONDUCTOR SIZE TUBING IPS	DIMENSIONS INCHES (MM)			APPROX. WT. EACH LBS. (KG)
		L	A	W	
ACBI10	1	1-1/4 (31.75)	3/4 (19.05)	1-5/16 (33.34)	.20 (.09)
ACBI12	1-1/4	1-5/8 (41.27)	1 (25.4)	1-11/16 (42.86)	.19 (.09)
ACBI14	1-1/2	1-3/4 (44.45)	1-1/4 (31.75)	1-15/16 (49.21)	.18 (.08)
ACBI20	2	1-3/4 (44.45)	1 (25.4)	2-3/8 (60.32)	.25 (.11)
ACBI24	2-1/2	2-1/8 (53.93)	1-1/8 (28.58)	2-7/8 (73.02)	.46 (.21)
ACBI30	3	2-1/2 (63.5)	1-1/4 (31.75)	3-1/2 (88.9)	.78 (.35)
ACBI34	3-1/2	2-3/4 (69.85)	1-1/2 (38.1)	4 (101.6)	.89 (.40)
ACBI40	4	3 (76.2)	1-1/2 (38.1)	4-1/2 (114.3)	1.2 (.54)
ACBI50	5	3-1/4 (82.55)	1-3/4 (44.45)	5-9/16 (141.29)	1.7 (.77)
ACBI60	6	3-1/4 (82.55)	1-3/4 (44.45)	6-5/8 (168.28)	2.2 (1.0)

MISCELLANEOUS AND GROUNDING BRONZE CORONA END CAP FOR COPPER TUBING

BRONZE
BCB

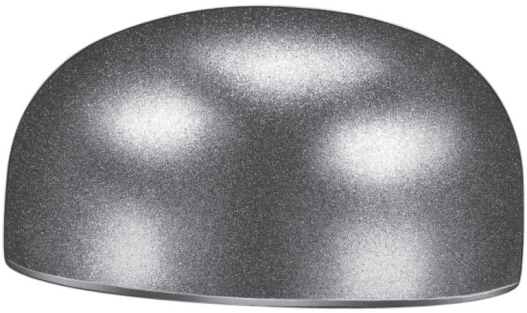

Bronze external, corona end cap for reducing electrostatic loss and enclosing tubing end. Cap is designed for tapered drive-fit.

Material: Bronze alloy

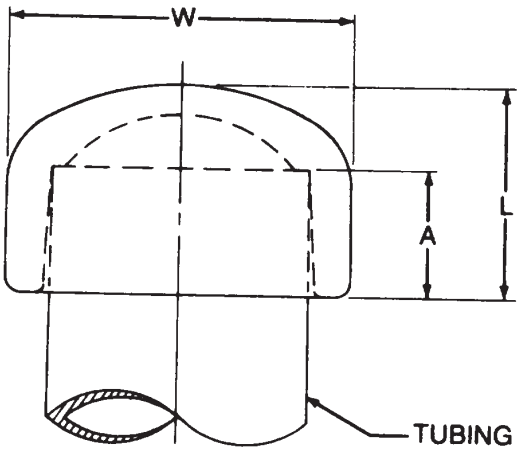

Product Data & Conductor Size

CATALOG NUMBER	COPPER CONDUCTOR SIZE TUBING IPS	DIMENSIONS INCHES (MM)			APPROX. WT. EACH LBS. (KG)
		L	A	W	
BCB06	3/4	1-3/8 (34.92)	7/8 (22.22)	1-9/16 (39.69)	.40 (.18)
BCB10	1	1-3/8 (34.92)	7/8 (22.22)	1-7/8 (47.62)	1.0 (.45)
BCB12	1-1/4	1-1/2 (38.1)	1 (25.4)	2-1/4 (57.15)	1.8 (.82)
BCB14	1-1/2	1-5/8 (41.28)	1 (25.4)	2-5/8 (66.68)	2.0 (.91)
BCB20	2	1-3/4 (44.45)	1 (25.4)	3-1/16 (77.79)	2.1 (.95)
BCB24	2-1/2	2-1/2 (63.5)	1-5/8 (41.28)	3-3/4 (95.25)	3.2 (1.45)
BCB30	3	3 (76.2)	1-7/8 (47.62)	4-1/2 (114.3)	4.0 (1.81)
BCB34	3-1/2	3-1/8 (79.38)	2 (50.8)	5 (127.0)	5.3 (2.40)
BCB40	4	2-1/2 (63.5)	1-1/4 (31.75)	5-3/8 (136.52)	9.5 (4.31)

MISCELLANEOUS AND GROUNDING BRONZE CORONA END PLUG FOR COPPER TUBING

BRONZE
CBI

Bronze internal, corona end plug for reducing electro-static loss and enclosing tubing end. Plug is designed for drive fit with tapered internal fingers.

Material: Bronze alloy

Note: To specify extra heavy (Schedule 80, EHIPS) tubing, add "H" to catalog number.
Example: CBIH12.

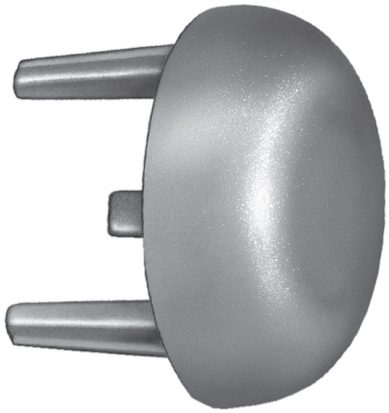

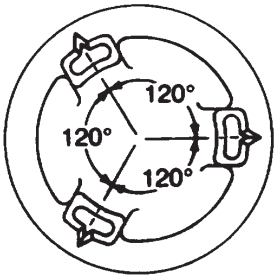

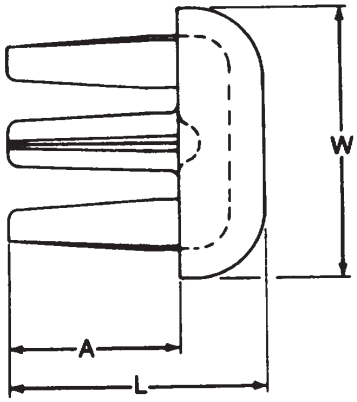

Product Data & Conductor Size

CATALOG NUMBER	COPPER CONDUCTOR SIZE TUBING IPS	DIMENSIONS INCHES (MM)			APPROX. WT. EACH LBS. (KG)
		L	A	W	
CBI06	3/4	1-1/4 (31.75)	7/8 (22.22)	1-1/16 (26.99)	.28 (.13)
CBI10	1	1-1/4 (31.75)	3/4 (19.05)	1-5/16 (33.34)	.34 (.15)
CBI12	1-1/4	1-5/8 (41.28)	1 (25.4)	1-11/16 (42.86)	.39 (.18)
CBI14	1-1/2	1-3/4 (44.45)	1-1/4 (31.75)	1-15/16 (49.21)	.58 (.26)
CBI20	2	1-3/4 (44.45)	1 (25.4)	2-3/8 (60.32)	.86 (.39)
CBI24	2-1/2	2-1/8 (53.98)	1-1/8 (28.58)	2-7/8 (73.02)	1.1 (.50)
CBI30	3	2-1/2 (63.5)	1-1/4 (31.75)	3-1/2 (88.9)	1.8 (.82)
CBI34	3-1/2	2-3/4 (69.85)	1-1/2 (38.1)	4 (101.6)	2.4 (1.09)
CBI40	4	3-1/4 (82.55)	1-3/4 (44.45)	4-1/2 (114.3)	3.0 (1.36)

MISCELLANEOUS AND GROUNDING ALUMINUM CABLE SPACERS

ALUMINUM

APCS

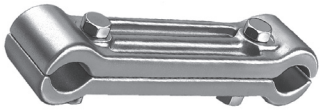

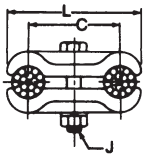

Fig. 1

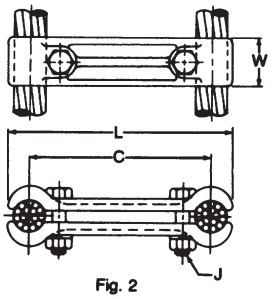

Fig. 2

Aluminum alloy, parallel cable spacer for maintaining aluminum cable clearence and preventing loose cable damage. Recommended for slack spans only. Contact sealant is recommended.

Material: **Casting**–356-T6 aluminum alloy
Hardware–aluminum alloy

Product Data & Conductor Size

CATALOG NUMBER	FIG. NO.	ALUMINUM CONDUCTOR RANGE			DIMENSIONS INCHES (MM)				APPROX. WT. EACH LBS. (KG)
		AAC	ACSR	DIA.	L	W	C	J	
APCS94	1	350–600 MCM	336.4–477 MCM	.681- .893 (17.30- 22.68)	5-1/4 (133.35)	1-3/4 (44.45)	4 (101.6)	1/2 (12.7)	1.0 (.45)
APCS98	2				9-1/4 (234.95)	1-3/4 (44.45)	8 (203.2)	1/2 (12.7)	1.8 (.82)
APCS114	1	600–900 MCM	556.5-795 MCM	.870- 1.108 (22.10- 28.14)	5-1/2 (139.7)	1-3/4 (44.45)	4 (101.6)	1/2 (12.7)	1.4 (.63)
APCS118	2				9-1/2 (241.3)	1-3/4 (44.45)	8 (203.2)	1/2 (12.7)	1.9 (.86)
APCS1112	2				13-1/2 (342.9)	1-3/4 (44.45)	12 (304.8)	1/2 (12.7)	2.5 (1.13)
APCS134	1	900–1250 MCM	715.5–1113 MCM	1.036- 1.293 (26.31- 32.84)	5-3/4 (146.05)	2-1/8 (53.98)	4 (101.6)	5/8 (15.88)	1.9 (.86)
APCS136	2				7-3/4 (196.85)	2-1/8 (53.98)	6 (152.4)	1/2 (12.7)	2.0 (.91)
APCS138	2				9-3/4 (247.65)	2-1/8 (53.98)	8 (203.2)	1/2 (12.7)	2.2 (1.0)
APCS1312	2				13-3/4 (349.25)	2-1/8 (53.98)	12 (304.8)	1/2 (12.7)	3.0 (1.36)
APCS154	1	1250–1600 MCM	1113–1272 MCM	1.289- 1.459 (32.74- 37.06)	5-7/8 (149.22)	2-1/8 (53.98)	4 (101.6)	5/8 (15.88)	1.2 (.54)
APCS158	2				9-7/8 (250.82)	2-1/8 (53.98)	8 (203.2)	5/8 (15.88)	2.4 (1.09)
APCS1512	2				13-7/8 (352.42)	2-1/8 (53.98)	12 (304.8)	1/2 (12.7)	3.1 (1.41)
APCS163	1	1500–2000 MCM	1272–1590 MCM	1.382- 1.632 (35.10- 41.45)	5-1/8 (130.18)	2-1/8 (53.98)	3 (76.2)	5/8 (15.88)	1.5 (.68)
APCS164	2				6-1/8 (155.58)	2-1/8 (53.98)	4 (101.6)	5/8 (15.88)	2.0 (1.91)
APCS166	2				8-1/4 (209.55)	2-1/8 (53.98)	6 (152.4)	5/8 (15.88)	2.8 (1.27)
APCS168	2				10-1/8 (257.18)	2-1/8 (53.98)	8 (203.2)	5/8 (15.88)	3.0 (1.36)
APCS1612	2				14-1/8 (358.78)	2-1/8 (53.98)	12 (304.8)	5/8 (15.88)	4.2 (1.90)
APCS184	1	2000–2500 MCM	2156–2312 MCM	1.632- 1.824 (41.45- 46.33)	6-1/4 (158.75)	2-1/8 (53.98)	4 (101.6)	5/8 (15.88)	2.5 (1.13)
APCS188	2				10-1/4 (260.35)	2-1/8 (53.98)	8 (203.2)	5/8 (15.88)	3.0 (1.36)
APCS1812	2				14-1/4 (361.95)	2-1/8 (53.98)	12 (304.8)	5/8 (15.88)	4.0 (1.81)
APCS1818	2				20-1/4 (514.35)	2-1/8 (53.98)	18 (457.2)	5/8 (15.88)	5.5 (2.49)

MISCELLANEOUS AND GROUNDING ALUMINUM CABLE SPACER TERMINAL

ALUMINUM
APCSF

Aluminum alloy, parallel cable spacer terminal. Recommended for slack spans only. Contact surfaces are furnished on both sides of tongue. Contact sealant is recommended. For limited current use like lightning arrester tap.

Material: **Castings**—356-T6 aluminum alloy
Pad—aluminum bar

Note: To obtain pad rotated 90 degrees and parallel to cables, add sufix " 90" to catalog number.
Example: APCSF16D1290.

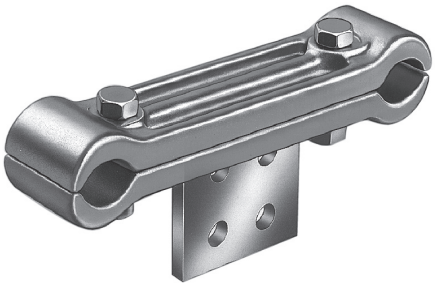

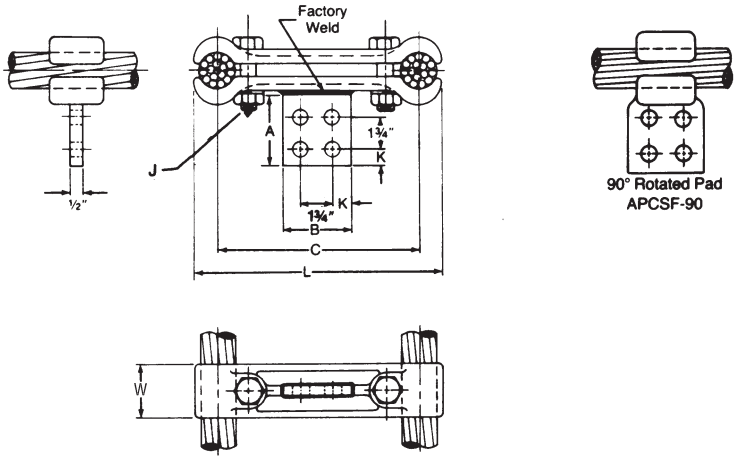

Product Data & Conductor Size

CATALOG NUMBER	ALUMINUM CONDUCTOR RANGE			DIMENSIONS INCHES (MM)							APPROX. WT. EACH LBS. (KG)
	AAC	ACSR	DIA.	L	W	A	B	C	K	J	
APCSF9D8	350–600 MCM	336–477 MCM	.681- .893 (17.30- 22.68)	9-1/4 (234.95)	1-3/4 (44.45)	4-1/2 (114.3)	4 (101.6)	8 (203.2)	1-1/8 (28.58)	1/2 (12.7)	2.7 (1.22)
APCSF9D12				13-1/4 (336.55)		4-1/2 (114.3)	4 (101.6)	12 (304.8)	1-1/8 (28.58)	1/2 (12.7)	3.4 (1.54)
APCSF11D8	600–900 MCM	556–795 MCM	.870- 1.108 (22.10- 28.14)	9-1/2 (241.3)	1-3/4 (44.45)	4-1/2 (114.3)	4 (101.6)	8 (203.2)	1-1/8 (28.58)	1/2 (12.7)	2.8 (1.27)
APCSF11D12				13-1/2 (342.9)		4-1/2 (114.3)	4 (101.6)	12 (304.8)	1-1/8 (28.58)	1/2 (12.7)	3.5 (1.59)
APCSF13D8	900–1250 MCM	715–1113 MCM	1.081- 1.293 (27.46- 32.84)	9-3/4 (247.65)	2-1/8 (53.98)	4-1/2 (114.3)	4 (101.6)	8 (203.2)	1-1/8 (28.58)	1/2 (12.7)	3.1 (1.41)
APCSF13D12				13-3/4 (349.25)		4-1/2 (114.3)	4 (101.6)	12 (304.8)	1-1/8 (28.58)	1/2 (12.7)	3.9 (1.77)
APCSF15D8	1200–1600 MCM	1113–1272 MCM	1.289- 1.459 (32.74- 37.06)	9-7/8 (250.82)	2-1/8 (53.98)	4-1/2 (114.3)	4 (101.6)	8 (203.2)	1-1/8 (28.58)	1/2 (12.7)	3.2 (1.45)
APCSF15D12				13-7/8 (352.42)		4-1/2 (114.3)	4 (101.6)	12 (304.8)	1-1/8 (28.58)	1/2 (12.7)	4.0 (1.81)
APCSF16C8	1500–2000 MCM	1272–1590 MCM	1.382- 1.632 (35.10- 41.45)	10-1/8 (257.18)	2-1/8 (53.98)	3-1/2 (88.9)	3 (76.2)	8 (203.2)	5/8 (15.88)	5/8 (15.88)	3.6 (1.63)
APCSF16D12				14-1/8 (358.78)		4-1/2 (114.3)	4 (101.6)	12 (304.8)	1-1/8 (28.58)	5/8 (15.88)	5.1 (2.31)
APCSF18D8	2000–2500 MCM	2156–2312 MCM	1.632- 1.824 (41.45- 46.33)	10-1/4 (260.35)	2-1/8 (53.98)	4-1/2 (114.3)	4 (101.6)	8 (203.2)	1-1/8 (28.58)	5/8 (15.88)	3.9 (1.77)
APCSF18D12				14-1/4 (361.95)		5 (127.0)	4 (101.6)	12 (304.8)	1-1/8 (28.58)	5/8 (15.88)	4.9 (2.22)

MISCELLANEOUS AND GROUNDING
BRONZE CABLE SPACERS

BRONZE
BPCS

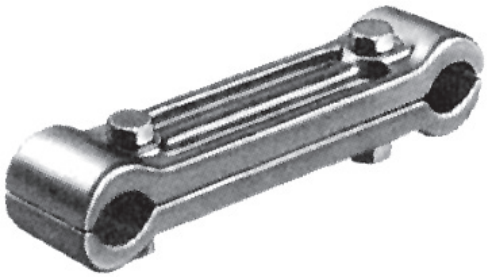

Bronze alloy, parallel cable spacer for maintaining cable clearance and preventing loose cable damage. Recommended for slack spans only.

Material: **Casting**–Bronze alloy
Hardware–Stainless steel

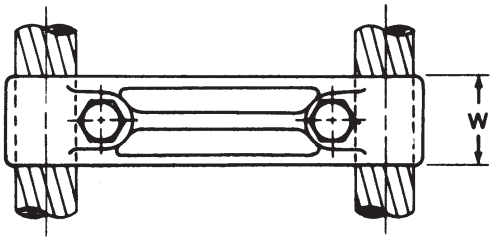

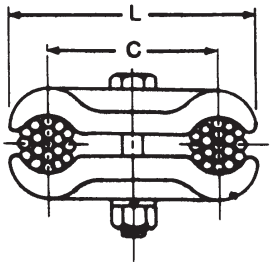

Fig. 1

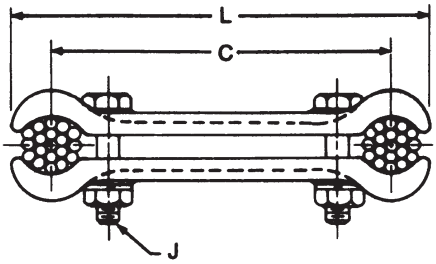

Fig. 2

Product Data & Conductor Size

CATALOG NUMBER	FIG. NO.	COPPER CONDUCTOR RANGE		DIMENSIONS INCHES (MM)				APPROX. WT. EACH LBS. (KG)
		CABLE	DIA.	L	W	C	J	
BPCS0804	2	500–800 MCM	.811- 1.031 (20.59- 26.18)	5-1/2 (139.70)	2 (50.8)	4 (101.60)	1/2 (12.7)	4.6 (2.08)
BPCS0806	2			7-1/2 (190.50)	2 (50.8)	6 (152.40)	1/2 (12.7)	5.6 (2.54)
BPCS0808	2			9-1/2 (241.30)	2 (50.8)	8 (203.20)	1/2 (12.7)	6.2 (2.81)
BPCS08012	2			13-1/2 (342.90)	2 (50.8)	12 (304.80)	1/2 (12.7)	8.3 (3.76)
BPCS100212	1	750–1000 MCM	.998- 1.152 (25.34- 29.26)	4-1/2 (114.30)	2 (50.8)	2-1/2 (63.50)	1/2 (12.7)	5.5 (2.49)
BPCS1006	2			7-3/4 (196.85)	2 (50.8)	6 (152.40)	1/2 (12.7)	6.6 (3.0)
BPCS1008	2			9-3/4 (247.65)	2 (50.8)	8 (203.02)	1/2 (12.7)	7.3 (3.31)
BPCS1508	2	1000–1500 MCM	1.152- 1.412 (29.26- 35.86)	10-1/4 (260.35)	2 (50.8)	8 (203.20)	1/2 (12.7)	7.9 (3.59)

MISCELLANEOUS AND GROUNDING COPPER BRAIDED SHUNT

COPPER
FB

Seamless copper ferrules pressed on flexible braided copper wires. Individual wires used in braid are tinned prior to weaving so that maximum protection from corrosion is provided. Pad holes have NEMA spacing.

Material: Copper

Notes: For length other than those shown, indicate total length required; example: for 18" overall length add "18" to catalog number. **Example:** FB100018.
Please order in 6-inch length increments.
Minimum order quantity of 5.

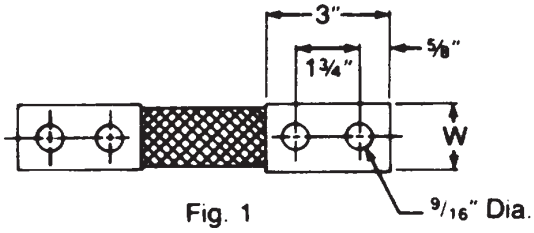

Fig. 1

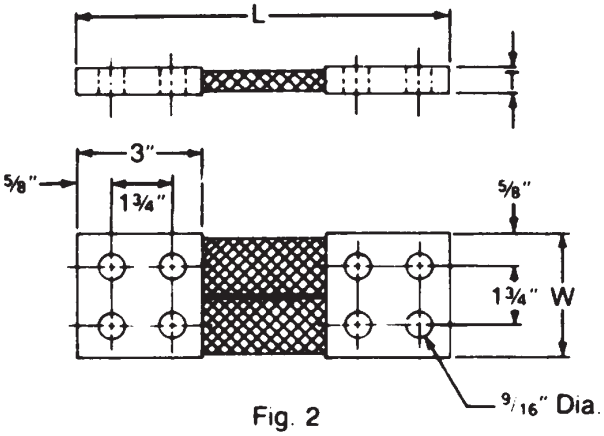

Fig. 2

Product Data & Conductor Size

CATALOG NUMBER	FIG. NO.	AMPERE RATING		QTY. BRAIDS USED	DIMENSIONS INCHES (MM)			APPROX. WT. EACH LBS. (KG)
		INDOOR	OUTDOOR		L	T	W	
FB200	1	200	284	1	12 (304.8)	5/32 (3.97)	1 (25.4)	.5 (.23)
FB400	1	400	536	1	12 (304.8)	3/8 (9.52)	1-3/8 (34.92)	1.0 (.45)
FB600	1	600	774	2	12 (304.8)	1/2 (12.7)	1-5/8 (41.28)	1.5 (.68)
FB800	1	800	1017	3	12 (304.8)	3/4 (19.05)	1-5/8 (41.28)	2.0 (.91)
FB1000	2	1000	1260	6	12 (304.8)	9/16 (14.29)	3 (76.2)	2.0 (.91)
FB1200	2	1200	1500	4	12 (304.8)	5/8 (15.88)	3-1/16 (77.79)	2.0 (.91)

MISCELLANEOUS AND GROUNDING COPPER LAMINATED SHUNT

COPPER
FS

Fully annealed copper laminations to make semi-flexible shunt. Tinned ends are soldered together under pressure to form a one piece unit at contact ends. Pad holes have NEMA spacing.

Material: Copper (tin plated contacts)

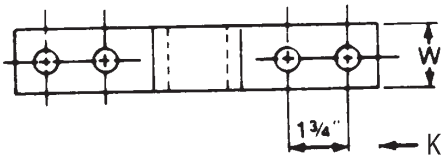

Fig. 1

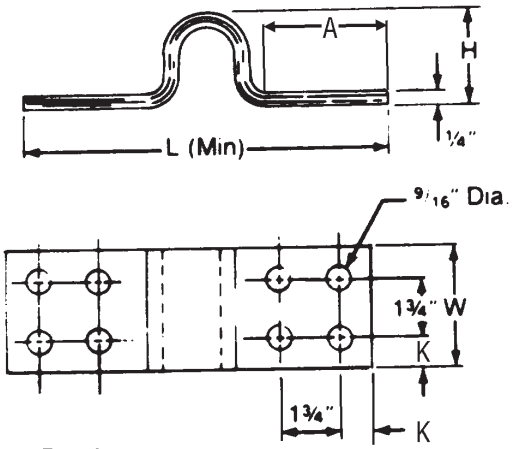

Fig. 2

Product Data & Conductor Size

CATALOG NUMBER	FIG. NO.	INDOOR AMPERE RATING	DIMENSIONS INCHES (MM)					APPROX. WT. EACH LBS. (KG)
			L	A	K	H	W	
FS081	1	647	9-1/2 (241.3)	3 (76.2)	5/8 (15.88)	3 (76.2)	2 (50.8)	2.2 (1.0)
FS122	2	973	10 1/2 (266.7)	3 (76.2)	5/8 (15.88)	3-1/2 (88.9)	3 (76.2)	3.7 (1.7)
FS162	2	1220	12 1/2 (317.5)	4 (101.6)	1-1/8 (28.58)	3-1/2 (88.9)	4 (101.6)	5.5 (2.49)

MISCELLANEOUS AND GROUNDING BI-METALLIC TRANSITION PLATE

BI-METALLIC
TP

Bi-metallic transition plate for making aluminum to copper connections between flat NEMA drilled tongues and bars. Aluminum plate and copper sheet are molecularly bonded. Total thickness is 1/16". Contact sealant is recommended.

Material: 80% aluminum
20% copper

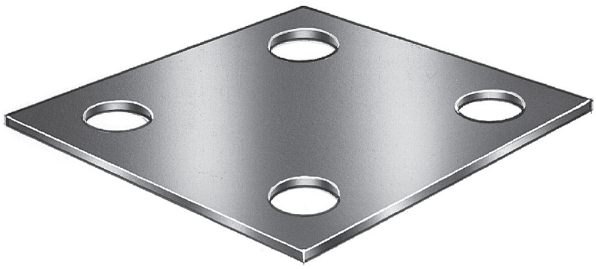

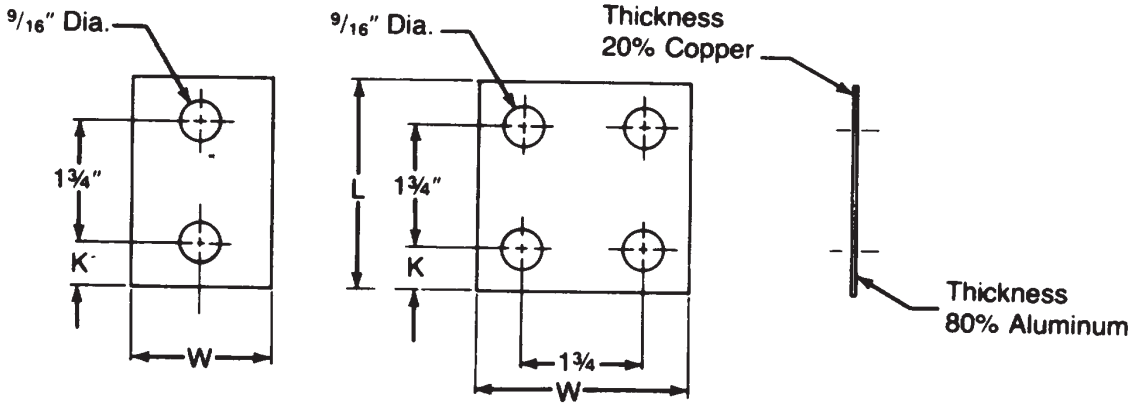

Fig. 1 Fig. 2

Product Data & Conductor Size

CATALOG NUMBER	FIG. NO.	DIMENSIONS INCHES (MM)			APPROX. WT. EACH LBS. (KG)
		L	K	W	
TPB	1	3 (76.2)	5/8 (15.88)	1-1/2 (38.1)	.05 (.02)
TPB2	1	3 (76.2)	5/8 (15.88)	2 (50.8)	.06 (.03)
TPC	2	3 (76.2)	5/8 (15.88)	3 (76.2)	.09 (.04)
TPD	2	4 (101.6)	1-1/8 (28.58)	4 (101.6)	.11 (.05)

MISCELLANEOUS AND GROUNDING BOLT CIRCLE ADAPTER

BRONZE
IFA

Bronze alloy bolt circle adapter for bronze bus support.

Material: **Casting**–bronze alloy

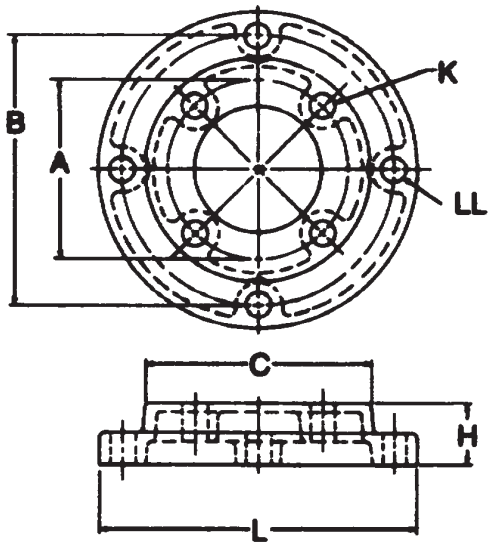

Product Data & Conductor Size

CATALOG NUMBER	BOLT CIRCLE DIA.		DIMENSIONS INCHES (MM)					APPROX. WT. EACH LBS. (KG)
	A	B	L	C	K	H	LL	
IFA35	3	5	6-1/4 (158.75)	4-1/4 (107.95)	9/16 (14.29)	1-7/16 (36.51)	11/16 (17.46)	4.7 (2.13)
IFA36	3	6	7-1/4 (184.15)	4-1/4 (107.95)	9/16 (14.29)	1-5/16 (33.34)	9/16 (14.29)	5.3 (2.40)
IFA57	5	7	8-1/2 (215.9)	6-1/4 (158.75)	11/16 (17.46)	1-11/16 (42.86)	13/16 (20.64)	8.5 (3.86)

MISCELLANEOUS AND GROUNDING GALVANIZED STEEL INSULATOR ADAPTER HEIGHT ADAPTER

GALVANIZED STEEL

AD

Galvanized steel insulator height adapter for bronze or aluminum bus support.

Material: Galvanized steel

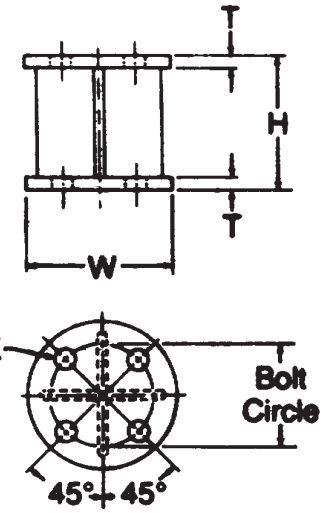

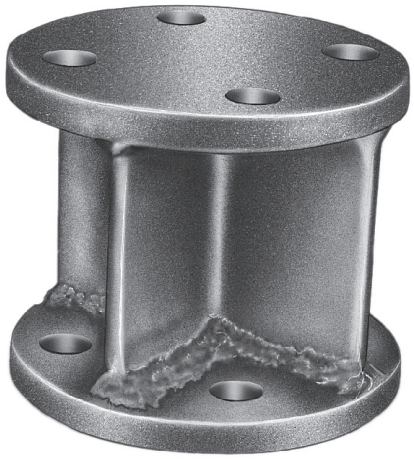

Product Data & Conductor Size

CATALOG NUMBER	BOLT CIRCLE DIA.	DIMENSIONS INCHES (MM)				APPROX. WT. EACH LBS. (KG)
		H	T	W	K	
AD203	3	2 (50.8)	3/8 (9.52)	4-1/4 (107.95)	9/16 (14.29)	4.1 (1.86)
AD205	5	2 (50.8)	3/8 (9.52)	6-1/4 (158.75)	11/16 (17.46)	7.7 (3.49)
AD303	3	3 (76.2)	3/8 (9.52)	4-1/4 (107.95)	9/16 (14.29)	4.9 (2.22)
AD305	5	3 (76.2)	3/8 (9.52)	6-1/4 (158.75)	11/16 (17.46)	8.5 (3.86)
AD353	3	3-1/2 (88.9)	3/8 (9.52)	4-1/4 (107.95)	9/16 (14.29)	8.3 (3.77)
AD355	5	3-1/2 (88.9)	3/8 (9.52)	6-1/4 (158.75)	11/16 (17.46)	8.8 (3.99)
AD403	3	4 (101.6)	3/8 (9.52)	4-1/4 (107.95)	9/16 (14.29)	5.6 (2.54)
AD405	5	4 (101.6)	3/8 (9.52)	6-1/4 (158.75)	11/16 (17.46)	9.2 (4.17)
AD503	3	5 (127.0)	3/8 (9.52)	4-1/4 (107.95)	9/16 (14.29)	6.4 (2.90)
AD505	5	5 (127.0)	3/8 (9.52)	6-1/4 (158.75)	11/16 (17.46)	10.0 (4.54)
AD603	3	6 (152.4)	3/8 (9.52)	4-1/4 (107.95)	9/16 (14.29)	7.2 (3.26)
AD605	5	6 (152.4)	3/8 (9.52)	6-1/4 (158.75)	11/16 (17.46)	10.8 (4.90)
AD803	3	8 (203.2)	1/2 (12.7)	4-1/4 (107.95)	9/16 (14.29)	8.7 (3.95)
AD805	5	8 (203.2)	1/2 (12.7)	6-1/4 (158.75)	11/16 (17.46)	12.3 (5.58)

MISCELLANEOUS AND GROUNDING GALVANIZED STEEL BOLT CIRCLE AND HEIGHT ADAPTER

GALVANIZED STEEL

BA

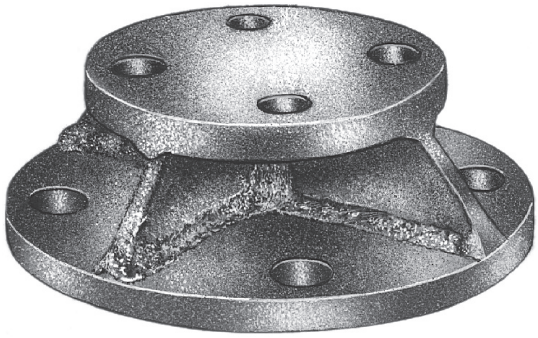

Galvanized steel bolt circle and height adapter for bronze or aluminum bus support.

Material: Galvanized steel

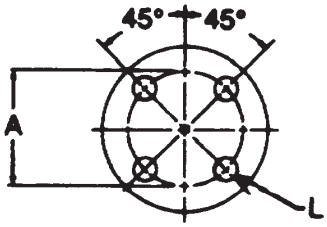

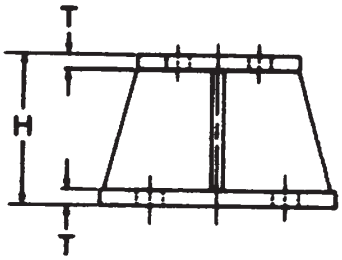

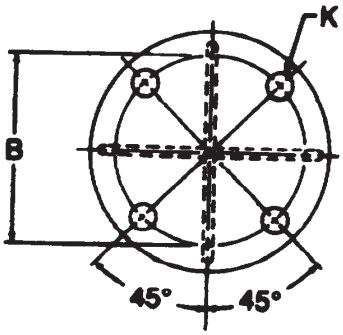

Product Data & Conductor Size

CATALOG NUMBER	BOLT CIRCLE DIA.		DIMENSIONS INCHES (MM)				APPROX. WT. EACH LBS. (KG)
	A	B	H	T	K	L	
BA3535	3	5	3-1/2 (88.9)	3/8 (9.52)	11/16 (17.46)	9/16 (14.29)	7.0 (3.18)
BA3557	5	7	3-1/2 (88.9)	1/2 (12.7)	13/16 (20.64)	11/16 (17.46)	14.9 (6.76)
BA35582	5	8-1/4	3-1/2 (88.9)	1/2 (12.7)	13/16 (20.64)	11/16 (17.46)	16.8 (7.62)
BA4035	3	5	4 (101.6)	3/8 (9.52)	11/16 (17.46)	9/16 (14.29)	8.0 (3.63)
BA40582	5	8-1/4	4 (101.6)	1/2 (12.7)	13/16 (20.64)	11/16 (17.46)	17.2 (7.80)
BA5035	3	5	5 (127.0)	3/8 (9.52)	11/16 (17.46)	9/16 (14.29)	8.6 (3.90)
BA50582	5	8-1/4	5 (127.0)	1/2 (12.7)	13/16 (20.64)	11/16 (17.46)	17.8 (8.07)
BA6035	3	5	6 (152.4)	3/8 (9.52)	11/16 (17.46)	9/16 (14.29)	9.4 (4.26)

MISCELLANEOUS AND GROUNDING
BRONZE GROUND CLAMP
CABLE TO ROD

BRONZE
GC

Ground clamp for grounding copper cable parallel to a ground rod or tube.

Material: **GC–Casting**—bronze alloy
Hardware—silicon bronze
C203–Casting–galvanized steel
Hardware–Zinc plated steel

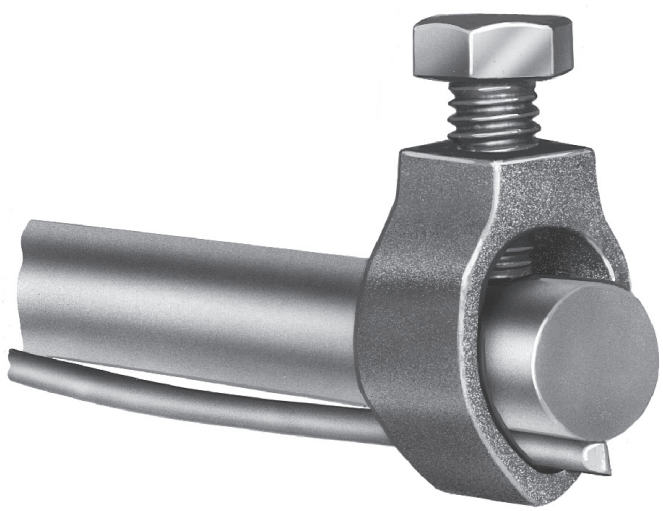

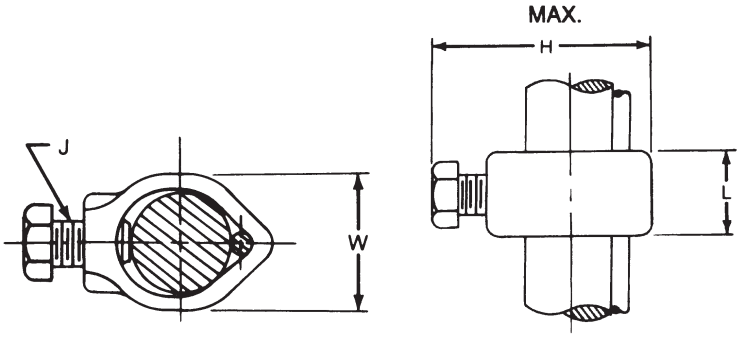

Product Data & Conductor Size

CATALOG NUMBER	COPPER CABLE RANGE	ROD DIA.	DIMENSIONS INCHES (MM)				APPROX. WT. EACH LBS. (KG)
			L	H	W	J	
GC5G5	#10 Sol.–#2 Str.	5/8	5/8 (15.88)	1-19/32 (40.39)	29/32 (23.11)	3/8 (9.52)	.11 (.05)
GC6	#8 Sol.–#4 Str.	3/4	3/4 (19.05)	2-1/8 (53.98)	1-1/32 (26.19)	3/8 (9.52)	.13 (.06)
C2030344	#8 Sol.–2/0 Str.	5/8	1-1/8 (28.6)	2-7/8 (73.0)	1-15/32 (37.3)	1/2 (12.7)	.34 (.15)
C2030345	#8 Sol.–2/0 Str.	3/4	1-1/8 (28.6)	2-7/8 (73.0)	1-15/32 (37.3)	1/2 (12.7)	.30 (.14)

MISCELLANEOUS AND GROUNDING
BRONZE GROUND CLAMP
CABLE TO ROD

BRONZE
GC103

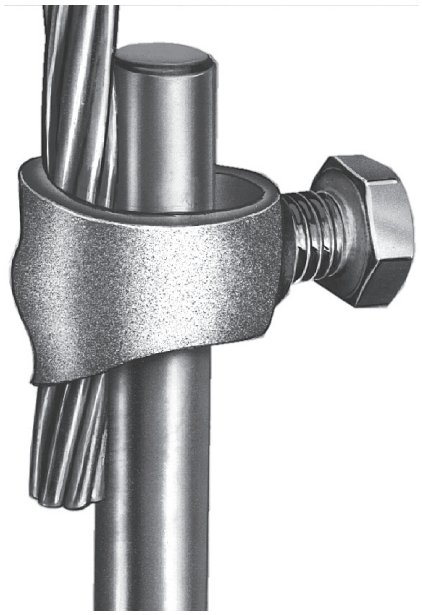

Heavy duty, bronze alloy ground clamp for grounding copper cable parallel to a ground rod in high pressure applications.

Material: **Castings**—bronze alloy
Hardware—stainless steel

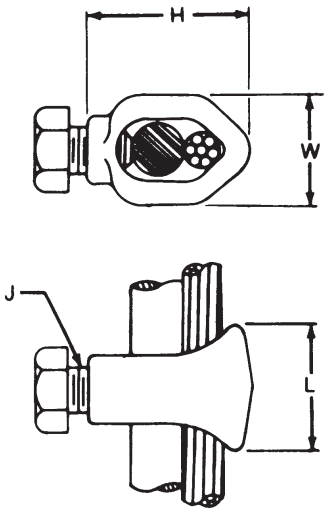

Product Data & Conductor Size

CATALOG NUMBER	COPPER CABLE RANGE	ROD DIA.	DIMENSIONS INCHES (MM)				APPROX. WT. EACH LBS. (KG)
			L	H	W	J	
GC10301	#4 Sol.–4/0 Str. #8 Sol.–2/0 Str.	1/2 5/8	1-1/8 (28.58)	1-3/4 (44.45)	1-1/4 (30.16)	1/2 (12.7)	.24 (.11)
GC10302	#4 Sol.–4/0 Str. #8 Sol.–2/0 Str.	5/8 3/4	1-1/4 (31.75)	2 (50.8)	1-3/8 (34.92)	1/2 (12.7)	.38 (.17)
GC10303	#4 Sol.–250 MCM	3/4	1-3/8 (34.92)	2-1/4 (57.15)	1-5/8 (41.28)	1/2 (12.7)	.51 (.23)

MISCELLANEOUS AND GROUNDING
BRONZE GROUND CLAMP
CABLE TO ROD OR TUBE

BRONZE
GC111

Bronze alloy ground clamp for clamping a copper cable to ground rod to tube in either vertical or horizontal direction.

Material: **Castings**—bronze alloy
Hardware—silicon bronze and stainless steel

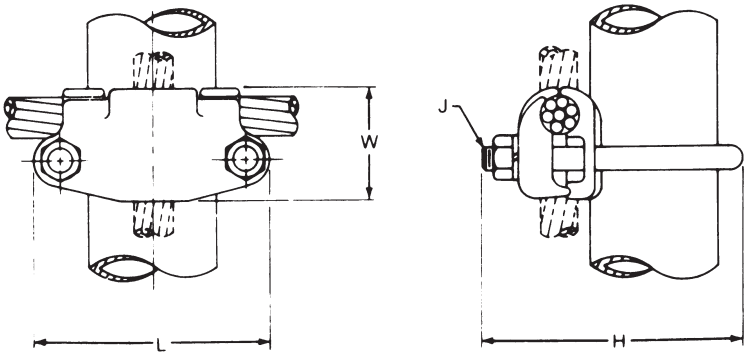

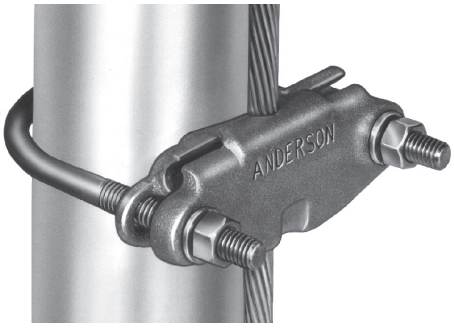

Product Data & Conductor Size

CATALOG NUMBER	COPPER CONDUCTOR RANGE		ROD/TUBE SIZE		DIMENSIONS INCHES (MM)				APPROX. WT. EACH LBS. (KG)
	CABLE	CABLE DIA.	O.D.	IPS	L	H	W	J	
GC1112A	#8 Sol.–#4 Str.	.128-.232 (3.25-5.89)	1/2 – 3/4	1/4 – 3/8	2 (50.8)	2-3/8 (60.32)	1-1/8 (28.58)	3/8 (9.52)	.5 (.23)
GC1112B	#4 Sol.–2/0 Str.	.204-.419 (5.18-10.64)			2 (50.8)	2-5/8 (66.68)	1-5/8 (41.28)	3/8 (9.52)	.5 (.23)
GC1112C3	2/0 Sol.–250 MCM	.365-.575 (9.27-14.6)			2-1/4 (57.15)	2-5/8 (66.68)	1-7/8 (47.62)	3/8 (9.52)	.75 (.34)
GC1112D	250–500 MCM	.574-.813 (14.58-20.65)			2-3/8 (60.32)	3-1/4 (82.55)	2-1/4 (57.15)	1/2 (12.7)	1.75 (.79)
GC1113A	#8 Sol.–#4 Str.	.128-.232 (3.25-5.89)	5/8 – 1	3/8 – 3/4	2-3/4 (69.85)	2-3/8 (60.32)	1-1/8 (28.58)	3/8 (9.52)	.5 (.23)
GC1113B	#4 Sol.–2/0 Str.	.204-.419 (5.18-10.64)			2-3/8 (60.32)	3-1/8 (79.38)	1-5/8 (41.28)	3/8 (9.52)	.75 (.34)
GC1113C3	2/0 Sol.–250 MCM	.365-.575 (9.27-14.6)			2-5/8 (66.68)	3-1/8 (79.38)	1-7/8 (47.62)	3/8 (9.52)	1.0 (.45)
GC1113D	250–500 MCM	.574-.813 (14.58-20.65)			2-5/8 (66.68)	3-1/8 (79.38)	2-1/4 (57.15)	1/2 (12.7)	2.0 (.91)
GC1114A	#8 Sol.–#4 Str.	.128-.232 (3.25-5.89)	1 – 1-1/4	3/4 – 1	2-5/8 (66.68)	3 (76.2)	1-1/8 (28.58)	3/8 (9.52)	.75 (.34)
GC1114B	#4 Sol.–2/0 Str.	.204-.419 (5.18-10.64)			2-5/8 (66.68)	3-1/2 (88.9)	1-5/8 (41.28)	3/8 (9.52)	1.0 (.45)
GC1114C	2/0 Sol.–250 MCM	.365-.575 (9.27-14.6)			2-7/8 (73.02)	3-7/8 (98.42)	1-7/8 (47.62)	1/2 (12.7)	1.75 (.79)
GC1114D	250–500 MCM	.574-.813 (14.58-20.65)			2-7/8 (73.02)	4 (101.6)	2-1/4 (57.15)	1/2 (12.7)	2.3 (1.04)
GC1115A	#8 Sol.–#4 Str.	.128-.232 (3.25-5.89)	1-3/4	1-1/4	3-1/8 (79.38)	3-3/8 (85.72)	1-1/8 (28.58)	3/8 (9.52)	1.0 (.45)
GC1115B	#4 Sol.–2/0 Str.	.204-.419 (5.18-10.64)			3-1/8 (79.38)	3-3/4 (95.25)	1-5/8 (41.28)	3/8 (9.52)	1.0 (.45)
GC1115C	2/0 Sol.–250 MCM	.365-.575 (9.27-14.6)			3-3/8 (85.72)	4-3/8 (111.12)	1-7/8 (47.62)	1/2 (12.7)	1.6 (.72)
GC1115D	250–500 MCM	.574-.813 (14.58-20.65)			2-3/8 (60.32)	4-1/2 (114.3)	2-1/4 (57.15)	1/2 (12.7)	2.3 (1.04)

Continued on next page

MISCELLANEOUS AND GROUNDING
BRONZE GROUND CLAMP
CABLE TO ROD OR TUBE
(CONTINUED)

Product Data & Conductor Size

CATALOG NUMBER	COPPER CONDUCTOR RANGE		ROD/TUBE SIZE		DIMENSIONS INCHES (MM)				APPROX. WT. EACH LBS. (KG)
	CABLE	CABLE DIA.	O.D.	IPS	L	H	W	J	
GC1116A	#8 Sol.–#4 Str.	.128-.232 (3.25-5.89)	2	1-1/2	3-1/4 (82.55)	3-5/8 (92.08)	1-1/8 (28.58)	3/8 (9.52)	1.0 (.45)
GC1116B	#4 Sol.–2/0 Str.	.204-.419 (5.18-10.64)			3-1/4 (82.55)	4 (101.6)	1-5/8 (41.28)	3/8 (9.52)	1.0 (.45)
GC1116C	2/0 Sol.–250 MCM	.365-.575 (9.27-14.6)			3-5/8 (92.08)	4-1/2 (114.3)	1-7/8 (47.62)	1/2 (12.7)	1.9 (.86)
GC1116D	250–500 MCM	.574-.813 (14.58-20.65)			3-5/8 (92.08)	4-3/4 (120.65)	2-1/4 (57.15)	1/2 (12.7)	2.5 (1.13)
GC1117A	#8 Sol.–#4 Str.	.128-.232 (3.25-5.89)	2-1/2	2	3-7/8 (98.42)	4-1/8 (104.78)	1-1/8 (28.58)	3/8 (9.52)	1.0 (.45)
GC1117B	#4 Sol.–2/0 Str.	.204-.419 (5.18-10.64)			3-7/8 (98.42)	4-1/2 (114.3)	1-5/8 (41.28)	3/8 (9.52)	1.3 (.59)
GC1117C	2/0 Sol.–250 MCM	.365-.575 (9.27-14.6)			4-1/8 (104.78)	5-1/8 (130.08)	1-7/8 (47.62)	1/2 (12.7)	2.2 (1.00)
GC1117D	250–500 MCM	.574-.813 (14.58-20.65)			4-1/8 (104.78)	5-1/4 (133.35)	2-1/4 (57.15)	1/2 (12.7)	2.8 (1.27)
GC1118B	#4 Sol.–2/0 Str.	.204-.419 (5.18-10.64)	3	2-1/2	4-1/4 (107.95)	5 (127.0)	1-5/8 (41.28)	3/8 (9.52)	1.3 (.59)
GC1118C	2/0 Sol.–250 MCM	.365-.575 (9.27-14.6)			4-5/8 (117.48)	5-5/8 (142.88)	1-7/8 (47.62)	1/2 (12.7)	2.4 (1.09)
GC1118D	250–500 MCM	.574-.813 (14.58-20.65)			4-5/8 (117.48)	5-3/4 (146.05)	2-1/4 (57.15)	1/2 (12.7)	3.5 (1.59)
GC1119B	#4 Sol.–2/0 Str.	.204-.419 (5.18-10.64)	3-1/2	3	4-7/8 (123.82)	5-1/2 (139.7)	1-5/8 (41.28)	3/8 (9.52)	1.8 (.82)
GC1119C	2/0 Sol.–250 MCM	.365-.575 (9.27-14.6)			5-1/8 (130.08)	6-1/8 (155.58)	1-7/8 (47.62)	1/2 (12.7)	2.5 (1.13)
GC1119D	250–500 MCM	.574-.813 (14.58-20.65)			5-1/8 (130.08)	6-1/4 (158.75)	2-1/4 (57.15)	1/2 (12.7)	4.0 (1.81)
GC11110B	#4 Sol.–2/0 Str.	.204-.419 (5.18-10.64)	4	3-1/2	5-3/8 (136.52)	6 (152.4)	1-5/8 (41.28)	3/8 (9.52)	2.0 (.91)
GC11110C	2/0 Sol.–250 MCM	.365-.575 (9.27-14.6)			5-5/8 (142.88)	6-5/8 (168.28)	1-7/8 (47.62)	1/2 (12.7)	2.8 (1.27)
GC11111B	#4 Sol.–2/0 Str.	.204-.419 (5.18-10.64)	4-1/2	4	5 7/8 (149.22)	6-1/2 (165.1)	1-5/8 (41.28)	3/8 (9.52)	2.3 (1.04)
GC11111C	2/0 Sol.–250 MCM	.365-.575 (9.27-14.6)			6-1/8 (155.58)	7-1/4 (184.15)	1-7/8 (47.62)	1/2 (12.7)	3.2 (1.45)
GC11111D	250–500 MCM	.574-.813 (14.58-20.65)			6-1/8 (155.58)	7-1/4 (184.15)	2-1/4 (57.15)	1/2 (12.7)	5.3 (2.40)
GC11113B	#4 Sol.–2/0 Str.	.204-.419 (5.18-10.64)	5-5/8	5	7-7/8 (200.02)	8-1/2 (215.9)	1-5/8 (41.28)	3/8 (9.52)	2.7 (1.22)
GC11113C	2/0 Sol.–250 MCM	.365-.575 (9.27-14.6)			8-1/8 (206.38)	9-1/4 (234.9)	1-7/8 (47.62)	1/2 (12.7)	3.8 (1.72)
GC11114B	#4 Sol.–2/0 Str.	.204-.419 (5.18-10.64)	6-5/8	6	7-7/8 (200.02)	8-1/2 (215.9)	1-5/8 (41.28)	3/8 (9.52)	4.9 (2.22)
GC11114C	2/0 Sol.–250 MCM	.365-.575 (9.27-14.6)			8-1/8 (206.38)	9-1/4 (234.9)	1-7/8 (47.62)	1/2 (12.7)	6.0 (2.72)

MISCELLANEOUS AND GROUNDING
BRONZE GROUND CLAMP
TWO CABLES TO ROD OR TUBE

BRONZE
GC115

Bronze alloy ground clamp for clamping two parallel copper cables perpendicular to a ground rod or tube.

Material: **Castings**—bronze alloy
Hardware—silicon bronze and stainless steel

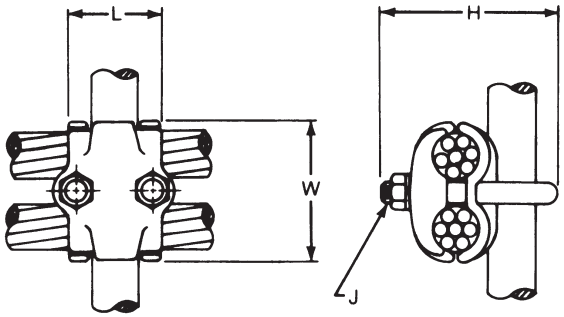

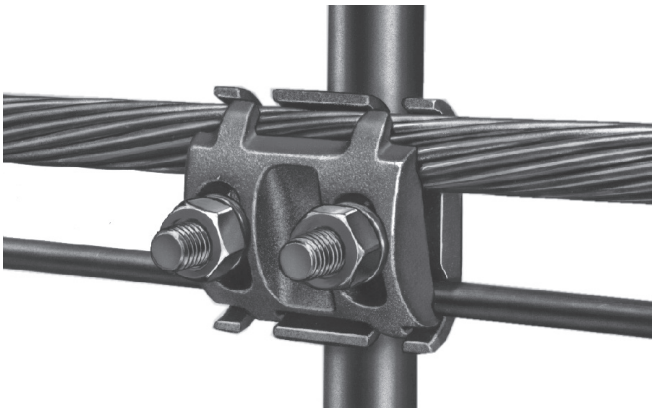

Product Data & Conductor Size

CATALOG NUMBER	COPPER CONDCUTOR RANGE		ROD/TUBE SIZE		DIMENSIONS INCHES (MM)				APPROX. WT. EACH LBS. (KG)
	CABLE	CABLE DIA.	O.D.	IPS	L	H	W	J	
GC1152A	#8 Sol.–#4 Str.	.128-.232 (3.25-5.89)	1/2 – 3/4	1/4 – 3/8	2 (50.8)	2-3/8 (60.32)	1-1/4 (31.75)	3/8 (9.52)	.5 (.23)
GC1152B	#4 Sol.–2/0 Str.	.204-.419 (5.18-10.64)			2 (50.8)	2-5/8 (66.68)	1-3/4 (44.45)	3/8 (9.52)	.5 (.23)
GC1152C3	2/0 Sol.–250 MCM	.365-.575 (9.27-14.6)			2 (50.8)	2-5/8 (66.68)	2 (50.8)	3/8 (9.52)	.75 (.34)
GC1153A	#8 Sol.–#4 Str.	.128-.232 (3.25-5.89)	5/8 – 1	3/8 – 3/4	2-3/8 (60.32)	2-1/2 (60.32)	1-1/4 (31.75)	3/8 (9.52)	.5 (.23)
GC1153B	#4 Sol.–2/0 Str.	.204-.419 (5.18-10.64)			2-3/8 (60.32)	3-1/8 (79.38)	1-3/4 (44.45)	3/8 (9.52)	.75 (.34)
GC1153C3	2/0 Sol.–250 MCM	.365-.575 (9.27-14.6)			2-3/8 (60.32)	3-1/8 (79.38)	2 (50.8)	3/8 (9.52)	1.0 (.45)
GC1154A	#8 Sol.–#4 Str.	.128-.232 (3.25-5.89)	1 – 1-1/4	3/4 – 1	2-5/8 (66.68)	3-1/4 (82.55)	1-1/4 (31.75)	3/8 (9.52)	.75 (.34)
GC1154B	#4 Sol.–2/0 Str.	.204-.419 (5.18-10.64)			2-5/8 (66.68)	3-1/4 (82.55)	1-3/4 (44.45)	3/8 (9.52)	1.0 (.45)
GC1154C	2/0 Sol.–250 MCM	.365-.575 (9.27-14.6)			3 (76.2)	3-7/8 (98.42)	2-1/8 (50.8)	1/2 (12.7)	1.75 (.79)
GC1155A	#8 Sol.–#4 Str.	.128-.232 (3.25-5.89)	1-3/4	1-1/4	3-1/8 (79.38)	3-1/8 (85.72)	1-1/4 (31.75)	3/8 (9.52)	1.0 (.45)
GC1155B	#4 Sol.–2/0 Str.	.204-.419 (5.18-10.64)			3-1/8 (79.38)	3-5/8 (92.08)	1-3/4 (44.45)	3/8 (9.52)	1.0 (.45)
GC1155C	2/0 Sol.–250 MCM	.365-.575 (9.27-14.6)			3-3/8 (85.72)	4-1/4 (107.95)	2-1/8 (50.8)	1/2 (12.7)	1.6 (.72)
GC1156A	#8 Sol.–#4 Str.	.128-.232 (3.25-5.89)	2	1-1/2	3-3/8 (85.72)	3-1/4 (82.55)	1-1/4 (31.75)	3/8 (9.52)	1.0 (.45)
GC1156B	#4 Sol.–2/0 Str.	.204-.419 (5.18-10.64)			3-3/8 (85.72)	4-1/8 (104.78)	1-3/4 (44.45)	3/8 (9.52)	1.0 (.45)
GC1156C	2/0 Sol.–250 MCM	.365-.575 (9.27-14.6)			3-5/8 (92.08)	4-1/4 (107.95)	2-1/8 (50.8)	1/2 (12.7)	1.9 (.86)

Continued on next page

MISCELLANEOUS AND GROUNDING
BRONZE GROUND CLAMP
TWO CABLES TO ROD OR TUBE
(CONTINUED)

Product Data & Conductor Size

CATALOG NUMBER	COPPER CONDUCTOR RANGE		ROD/TUBE SIZE		DIMENSIONS INCHES (MM)				APPROX. WT. EACH LBS. (KG)
	CABLE	CABLE DIA.	O.D.	IPS	L	H	W	J	
GC1157B	#4 Sol.–2/0 Str.	.204-.419 (5.18-10.64)	2-1/2	2	3-7/8 (98.42)	4-3/8 (111.12)	1-3/4 (44.45)	3/8 (9.52)	1.3 (.59)
GC1157C	2/0 Sol.–250 MCM	.365-.575 (9.27-14.6)			4-1/8 (104.78)	5 (127.0)	2-1/8 (50.8)	1/2 (12.7)	2.2 (1.00)
GC1158B	#4 Sol.–2/0 Str.	.204-.419 (5.18-10.64)	3	2-/2	4-3/8 (111.12)	5 (127.0)	1-3/4 (44.45)	3/8 (9.52)	1.3 (.59)
GC1158C	2/0 Sol.–250 MCM	.365-.575 (9.27-14.6)			4-5/8 (117.48)	5-1/2 (139.7)	2-1/8 (50.8)	1/2 (12.7)	2.4 (1.09)
GC1159B	#4 Sol.–2/0 Str.	.204-.419 (5.18-10.64)	3-1/2	3	4-7/8 (123.82)	5-1/8 (136.52)	1-3/4 (44.45)	3/8 (9.52)	1.8 (.82)
GC11510B	#4 Sol.–2/0 Str.	.204-.419 (5.18-10.64)	4	3-1/2	5-3/8 (136.52)	6 (152.4)	1-3/4 (44.45)	3/8 (9.52)	2.0 (.91)
GC11510C	2/0 Sol.–250 MCM	.365-.575 (9.27-14.6)			5-5/8 (142.88)	6-1/2 (165.1)	2-1/8 (50.8)	1/2 (12.7)	2.8 (1.27)
GC11511B	#4 Sol.–2/0 Str.	.204-.419 (5.18-10.64)	4-1/2	4	5 7/8 (149.22)	6-1/2 (165.1)	1-3/4 (44.45)	3/8 (9.52)	2.3 (1.04)
GC11511C	2/0 Sol.–250 MCM	.365-.575 (9.27-14.6)			6-1/8 (155.58)	6-7/8 (174.62)	2-1/8 (50.8)	1/2 (12.7)	3.2 (1.45)

MISCELLANEOUS AND GROUNDING BRONZE GROUND CLAMP ONE, TWO, OR THREE CABLES TO ROD OR TUBE

BRONZE
GC110

Bronze alloy ground clamp for clamping one, two or three parallel copper cables parallel to a ground rod or tube.

Material: **Castings**—bronze alloy
Hardware—silicon bronze and stainless steel

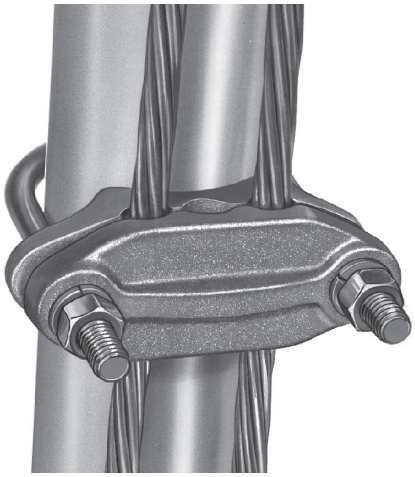

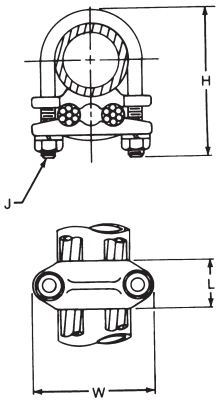

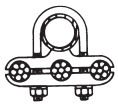

▲Wide Design Construction for some sizes.

Product Data & Conductor Size

CATALOG NUMBER	COPPER CONDCUTOR RANGE		ROD/TUBE SIZE		DIMENSIONS INCHES (MM)				APPROX. WT. EACH LBS. (KG)
	CABLE	CABLE DIA.	O.D.	IPS	L	H	W	J	
▲ GC11022D	2/0 Sol.–250 MCM	.365-.575 (9.27-14.6)	3/4	1/2	1-1/8 (28.58)	3 (76.2)	3-1/8 (79.38)	3/8 (9.52)	.74 (.34)
▲ GC11031D	#4 Sol.–2/0 Str.	.204-.419 (5.18-10.64)	1	3/4	1-1/8 (28.58)	3-1/8 (79.38)	3-1/4 (82.55)	3/8 (9.52)	.80 (.36)
▲ GC11032D	2/0 Sol.–250 MCM	.365-.575 (9.27-14.6)			1-1/8 (28.58)	3-1/8 (79.38)	3-1/4 (82.55)	3/8 (9.52)	.82 (.37)
▲ GC11041C	#4 Sol.–2/0 Str.	.204-.419 (5.18-10.64)	1-1/4	1	1-1/8 (28.58)	2-3/8 (60.82)	3-1/2 (88.9)	3/8 (9.52)	.93 (.42)
▲ GC11042D	2/0 Sol.–250 MCM	.365-.575 (9.27-14.6)			1-1/8 (28.58)	3-1/2 (88.9)	4-3/8 (111.12)	3/8 (9.52)	1.10 (.50)
▲ GC11051C	#4 Sol.–2/0 Str.	.204-.419 (5.18-10.64)	1-1/2	1-1/4	1-3/8 (34.92)	3-7/8 (98.42)	4-3/8 (111.12)	3/8 (9.52)	1.12 (.51)
▲ GC11052D	2/0 Sol.–250 MCM	.365-.575 (9.27-14.6)			1-3/8 (34.92)	3-7/8 (98.42)	4-3/8 (111.12)	3/8 (9.52)	1.14 (.52)
▲ GC11053D	250–500 MCM	.574-.813 (14.58-20.65)			1-3/8 (34.92)	3-7/8 (98.42)	4-3/4 (120.65)	3/8 (9.52)	1.20 (.54)
GC11061C	#4 Sol.–2/0 Str.	.204-.419 (5.18-10.64)	2	1-1/2	1-1/2 (38.1)	4 (101.6)	3-3/8 (85.72)	3/8 (9.52)	1.20 (.54)
GC11062C	2/0 Sol.–250 MCM	.365-.575 (9.27-14.6)			1-1/2 (38.1)	4-1/8 (104.78)	3-3/8 (85.72)	3/8 (9.52)	1.24 (.56)
GC11063D	250–500 MCM	.574-.813 (14.58-20.65)			1-1/2 (38.1)	4-1/2 (114.3)	4-1/2 (114.3)	1/2 (12.7)	1.34 (.61)
GC11081C	#4 Sol.–2/0 Str.	.204-.419 (5.18-10.64)	2-1/2	2	1-1/2 (38.1)	4-3/8 (111.12)	3-3/4 (96.25)	3/8 (9.52)	1.50 (.68)
GC11082C	2/0 Sol.–250 MCM	.365-.575 (9.27-14.6)			1-1/2 (38.1)	4-5/8 (117.48)	3-3/4 (96.25)	3/8 (9.52)	1.65 (.75)
GC11083D	250–500 MCM	.574-.813 (14.58-20.65)			1-5/8 (41.28)	5 (127.0)	5-7/8 (149.22)	1/2 (12.7)	1.65 (.75)

Continued on next page

MISCELLANEOUS AND GROUNDING
BRONZE GROUND CLAMP
ONE, TWO, OR THREE CABLES TO ROD OR TUBE (CONTINUED)

Product Data & Conductor Size

CATALOG NUMBER	COPPER CONDUCTOR RANGE		ROD/TUBE SIZE		DIMENSIONS INCHES (MM)				APPROX. WT. EACH LBS. (KG)
	CABLE	CABLE DIA.	O.D.	IPS	L	H	W	J	
GC110101C	#4 Sol.–2/0 Str.	.204-.419 (5.18-10.64)	3	2-1/2	1-1/2 (38.1)	5 (127.0)	4-1/2 (123.82)	3/8 (9.52)	1.65 (.75)
GC110102C	2/0 Sol.–250 MCM	.365-.575 (9.27-14.6)			1-1/2 (38.1)	5-1/8 (136.52)	4-7/8 (123.82)	1/2 (12.7)	1.92 (.87)
GC110103C	250–500 MCM	.574-.813 (14.58-20.65)			1-5/8 (41.28)	5-7/8 (149.22)	4-5/8 (117.48)	1/2 (12.7)	2.2 (1.00)
GC110121C	#4 Sol.–2/0 Str.	.204-.419 (5.18-10.64)	3-1/2	3	1-1/2 (38.1)	5-3/4 (146.06)	5 (127.0)	3/8 (9.52)	2.34 (1.06)
GC110122C	2/0 Sol.–250 MCM	.365-.575 (9.27-14.6)			1-1/4 (31.75)	5-3/4 (146.06)	4-7/8 (123.82)	3/8 (9.52)	2.34 (1.06)
GC110123C	250–500 MCM	.574-.813 (14.58-20.65)			1-5/8 (41.28)	6-1/4 (158.75)	5-1/4 (133.35)	1/2 (12.7)	2.40 (1.09)
GC110141C	#4 Sol.–2/0 Str.	.204-.419 (5.18-10.64)	4	3-1/2	1-1/2 (38.1)	6-7/8 (174.62)	5-3/8 (136.52)	3/8 (9.52)	2.40 (1.09)
GC110142C	2/0 Sol.–250 MCM	.365-.575 (9.27-14.6)			1-1/2 (38.1)	6 (152.4)	5-3/8 (136.52)	3/8 (9.52)	2.50 (1.13)
GC110143C	250–500 MCM	.574-.813 (14.58-20.65)			1-5/8 (41.28)	6-5/8 (168.28)	5-5/8 (142.88)	1/2 (12.7)	2.70 (1.22)
GC110161C	#4 Sol.–2/0 Str.	.204-.419 (5.18-10.64)	4-1/2	4	1-5/8 (41.28)	6-3/4 (171.45)	6 (152.4)	3/8 (9.52)	3.02 (1.37)
GC110162C	2/0 Sol.–250 MCM	.365-.575 (9.27-14.6)			1-1/2 (38.1)	6-1/2 (165.1)	5-7/8 (149.22)	3/8 (9.52)	3.75 (1.70)
GC110163C	250–500 MCM	.574-.813 (14.58-20.65)			1-5/8 (41.28)	6 (152.4)	6-1/8 (155.58)	1/2 (12.7)	3.85 (1.75)

▲ *Wide Design Construction*

MISCELLANEOUS AND GROUNDING
BRONZE GROUND CLAMP
CABLE TO FLAT

BRONZE
GC140

Bronze alloy ground clamp for clamping a copper cable to a flat bar.

Material: **Castings**—bronze alloy
Hardware—stainless steel and galvanized steel

Note: Bolts furnished are for clamping to 1/4" flat bar. If longer bolts are required, add bar thickness to catalog number.
Example: GC1400112 for 1/2" bar.

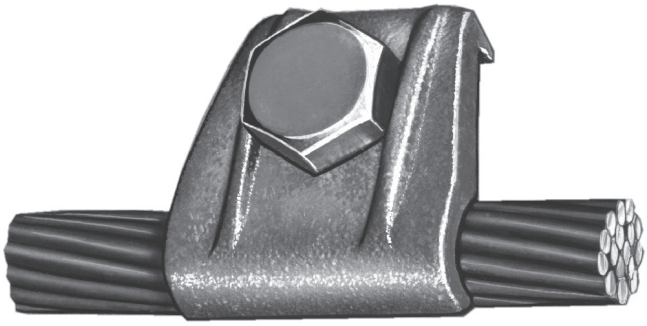

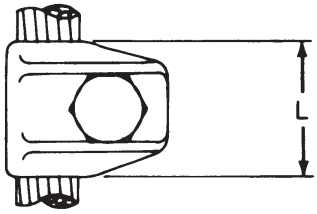

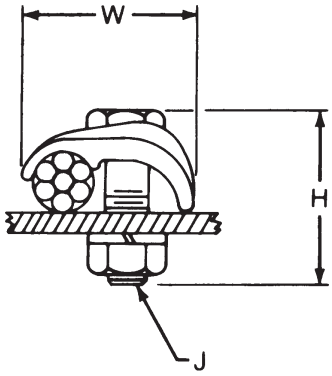

Product Data & Conductor Size

CATALOG NUMBER		COPPER CONDCUTOR RANGE		DIMENSIONS INCHES (MM)				
STAINLESS STEEL HARDWARE	GALVANIZED STEEL HARDWARE	CABLE	CABLE DIA.	L	H	W	J	APPROX. WT. EACH LBS. (KG)
GC14001	GC140G1	#4 Sol.–2/0 Str.	.204-.419 (5.18-10.64)	1-5/8 (41.28)	2-1/8 (53.98)	1-3/4 (44.45)	1/2 (12.7)	.30 (.14)
GC14002	GC140G2	2/0 Sol.–250 MCM	.365-.575 (9.27-14.6)	1-5/8 (41.28)	2-1/8 (53.98)	1-1/2 (38.1)	3/8 (9.52)	.42 (.19)
GC14003	GC140G3	300–500 MCM	.629-.813 (15.98-20.65)	2 (50.8)	2-1/8 (53.98)	2 (50.8)	1/2 (12.7)	.54 (.24)

MISCELLANEOUS AND GROUNDING
BRONZE GROUND CLAMP
CABLE TO FLAT

BRONZE
GC141

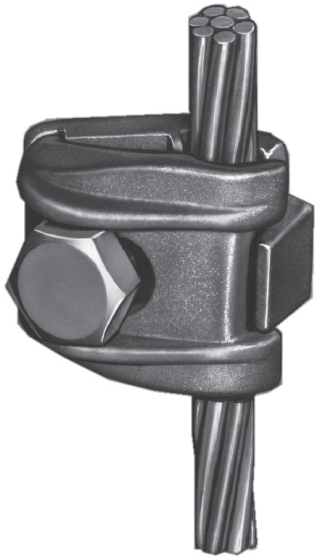

Bronze alloy ground clamp for clamping a copper cable to flat bar. Cable groove in bottom piece prevents excessive cable distortion.

Material: **Castings**—bronze alloy
Hardware—stainless steel or galvanized steel

Note: Bolts furnished are for clamping to 1/4" flat bar. If longer bolts are required, add bar thickness to catalog number.
Example: GC1410112 for 1/2" bar.

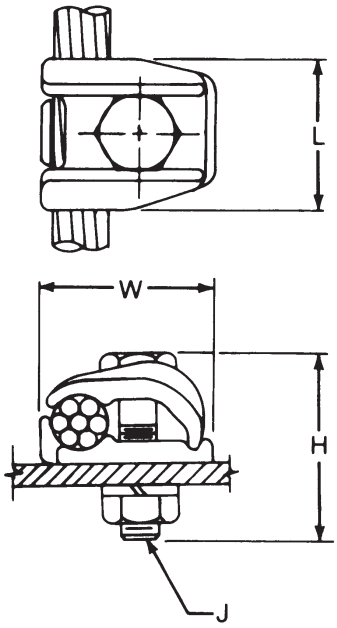

SF 24

Product Data & Conductor Size

CATALOG NUMBER		COPPER CONDCUTOR RANGE		DIMENSIONS INCHES (MM)				
STAINLESS STEEL HARDWARE	GALVANIZED STEEL HARDWARE	CABLE	CABLE DIA.	L	H	W	J	APPROX. WT. EACH LBS. (KG)
GC14101	GC141G1	#6 Sol–2/0 Str.	.162-.419 (4.11-10.64)	1-1/4 (31.75)	2 (50.8)	1-5/8 (41.28)	1/2 (12.7)	.42 (.19)
GC141A02	GC141AG2	#4 Sol–300 MCM	.204-.630 (5.18-16.0)	1-1/2 (38.1)	2-1/8 (53.98)	1-7/8 (47.62)	1/2 (12.7)	.50 (.23)
GC14103	GC141G3	300–500 MCM	.629-.813 (15.98-20.65)	2 (50.8)	2-3/8 (60.32)	2-1/2 (63.5)	1/2 (12.7)	.95 (.43)
GC14107	—	#4 Sol–300 MCM	.204-.630 (5.18-16.0)	1-3/4 (44.45)	2-1/4 (57.15)	2-1/8 (53.98)	5/8 (15.88)	.88 (.40)

MISCELLANEOUS AND GROUNDING
BRONZE GROUND CLAMP
TWO CABLES TO FLAT

BRONZE
GC143

Bronze alloy ground clamp for clamping two copper cables to a flat bar. Cable grooves in bottom piece prevents excessive cable distortion.

Material: **Castings**—bronze alloy
Hardware—stainless steel and galvanized steel

Note: Bolts furnished are for clamping to 1/4" flat bar. If longer bolts are required, add bar thickness to catalog number.
Example: GC1430112 for 1/2" bar.

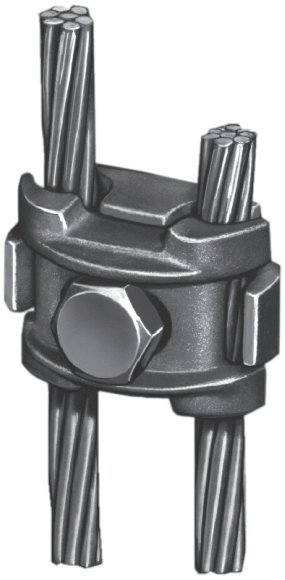

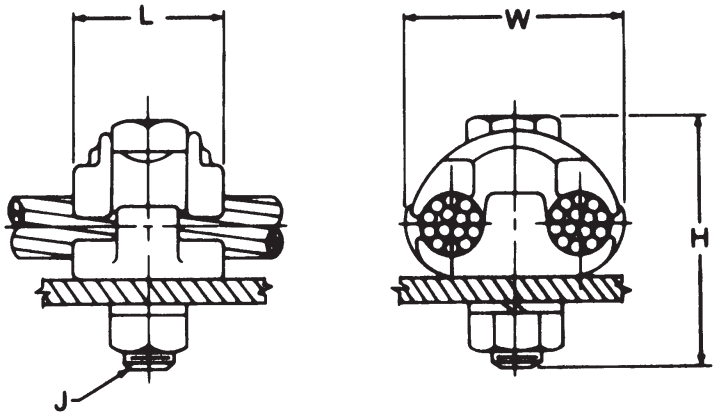

Product Data & Conductor Size

CATALOG NUMBER		COPPER CABLE RANGE	DIMENSIONS INCHES (MM)				APPROX. WT. EACH LBS. (KG)
STAINLESS STEEL HARD-WARE	GALVANIZED STEEL HARDWARE	CABLE	L	H	W	J	
GC14301	GC143G1	#4 Sol.–2/0 Str.	1-1/2 (38.1)	2-1/4 (57.15)	2 (50.8)	3/8 (9.52)	.60 (.27)
GC143A02	GC143AG2	#4 Sol.–300 MCM	1-1/2 (38.1)	2-5/8 (66.68)	2-1/4 (57.15)	1/2 (12.7)	.70 (.32)
GC143B02	—	#4 Sol.–250 MCM	1-3/4 (44.45)	2-3/4 (69.85)	2-5/16 (58.74)	5/8 (15.88)	.90 (.41)
GC14303	GC143G3	300–500 MCM	2 (50.8)	2-3/4 (69.85)	2-5/8 (66.68)	1/2 (12.7)	.85 (.38)

MISCELLANEOUS AND GROUNDING
BRONZE GROUND CLAMP
CABLE TO CABLE
(CROSS CONNECTOR)

BRONZE
GC113

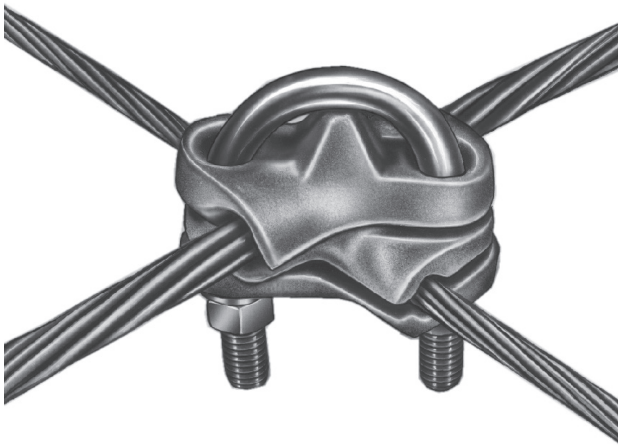

Bronze alloy ground clamp for cross connecting copper cable to copper cable. Can be used in concrete and underground.

Material: **Castings**—bronze alloy
Hardware— silicon bronze or stainless steel

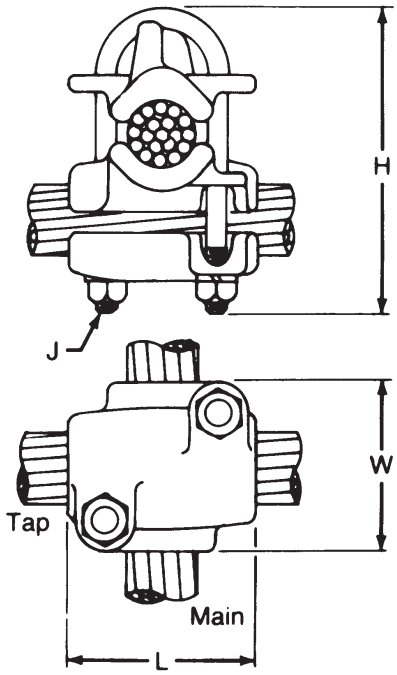

SF 26

Product Data & Conductor Size

CATALOG NUMBER	COPPER CABLE RANGE		DIMENSIONS INCHES (MM)				APPROX. WT. EACH LBS. (KG)
	MAIN	TAP	L	H	W	J	
GC113AA	#4 Sol.–2/0 Str.	#4 Sol.–2/0 Str.	2-1/8 (53.98)	2-3/4 (69.85)	2-1/8 (53.98)	3/8 (9.52)	.95 (.43)
GC113BA	2/0 Sol.–250 MCM	#4 Sol.–2/0 Str.	2-1/8 (53.98)	3 (76.2)	2-1/8 (53.98)	3/8 (9.52)	1.0 (.45)
GC113BB	2/0 Sol.–250 MCM	2/0 Sol.–250 MCM	2-3/8 (60.32)	3 (76.2)	2-3/8 (60.32)	3/8 (9.52)	1.50 (.68)
GC113CA	250–500 MCM	#4 Sol.–2/0 Str.	2-1/8 (53.98)	3-3/8 (85.72)	2-1/8 (53.98)	3/8 (9.52)	1.10 (.50)
GC113CB		2/0 Sol.–250 MCM	2-3/8 (60.32)	3-3/8 (85.72)	2-3/8 (60.32)	3/8 (9.52)	1.20 (.54)
GC113CC		250–500 MCM	2-1/2 (63.5)	4-1/4 (107.95)	2-1/2 (63.5)	1/2 (12.7)	1.90 (.86)

MISCELLANEOUS AND GROUNDING
BRONZE GROUND CLAMP
FLEXIBLE BRAID TO ROD OR TUBE

BRONZE
GC109

Bronze alloy ground clamp for clamping flexible copper grounding braid to a copper rod or tube.

Material: **Castings**—bronze alloy
Hardware—silicon bronze or stainless steel

Note: Refer to type GB for flexible copper groundbraid. Ordered separately.

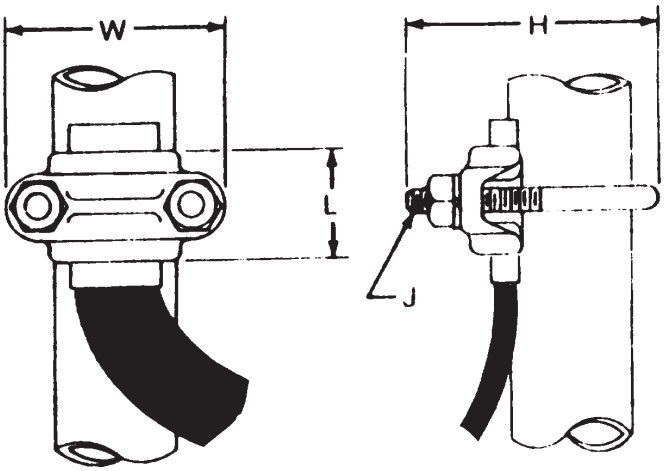

Product Data & Conductor Size

CATALOG NUMBER	ROD/TUBE SIZE		DIMENSIONS INCHES (MM)				APPROX. WT. EACH LBS. (KG)
	O.D.	IPS	L	H	W	J	
GC10903	1	3/4	1-1/4 (31.75)	2-1/2 (63.5)	2-3/8 (60.32)	3/8 (9.52)	.50 (.23)
GC10904	1-1/4	1	1-1/2 (38.1)	3-1/4 (82.55)	2-3/4 (69.85)	3/8 (9.52)	.62 (.28)
GC10905	1-1/2	1-1/4	1-1/2 (38.1)	3-1/2 (88.9)	3 (76.2)	3/8 (9.52)	.70 (.32)
GC10906	2	1-1/2	1-3/4 (44.45)	3-1/4 (82.55)	3-3/8 (85.72)	3/8 (9.52)	.75 (.34)
GC10907	2-1/2	2	2 (50.8)	4-3/8 (111.12)	3-7/8 (98.42)	3/8 (9.52)	1.0 (.45)
GC10908	3	2-1/2	2 (50.8)	4-1/2 (114.3)	4-7/8 (123.82)	1/2 (12.7)	1.65 (.75)
GC10909	3-1/2	3	2 (50.8)	5-1/2 (139.7)	5-1/4 (133.35)	1/2 (12.7)	1.75 (.79)
GC10910	4	3-1/2	2-1/4 (57.15)	6 (152.4)	5-3/4 (146.05)	1/2 (12.7)	2.0 (.91)
GC10911	4-1/2	4	2-1/2 (63.5)	6 (152.4)	6-1/4 (158.75)	1/2 (12.7)	2.5 (1.13)

MISCELLANEOUS AND GROUNDING COPPER FLEXIBLE GROUNDING BRAID

BRONZE
GB

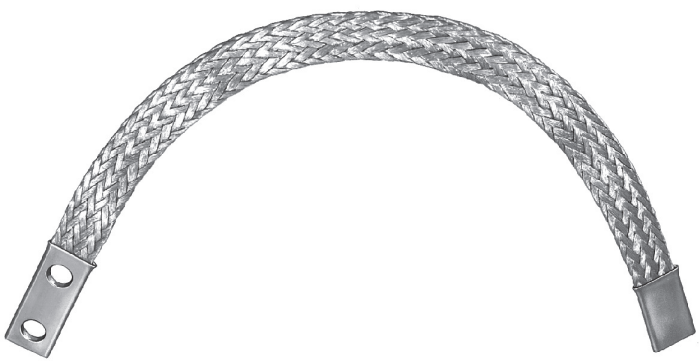

Flexible copper grounding braid for use with GC109 ground clamp. Braid is tinned before weaving and is enclosed on both ends by a compressed seamless unplated copper ferrule. One ferrule is drilled per NEMA standards and the other ferrule is blank.

Material: **Braid**—tinned copper
Ferrules—copper

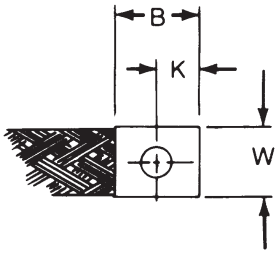

Fig. 1

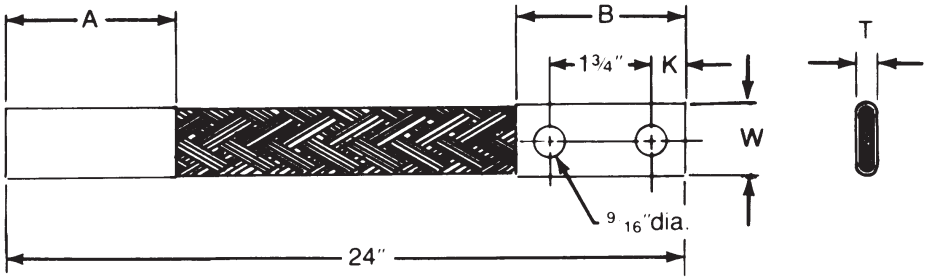

Fig. 2

Product Data & Conductor Size

CATALOG NUMBER	FIG. NO.	CIRCULAR MILS OF BRAIDS	APPROX. AMPERE RATING	DIMENSIONS INCHES (MM)					APPROX. WT. EACH LBS. (KG)
				A	B	K	T	W	
GB1003A	1	77,184	100	2 (50.8)	1-1/2 (38.1)	3/4 (19.05)	3/16 (4.76)	1-1/8 (28.58)	.80 (.36)
GB1003B	2	77,184	100	2 (50.8)	3 (76.2)	5/8 (15.88)	3/16 (4.76)	1-1/8 (28.58)	.90 (.41)
GB2005A	1	168,840	200	2 (50.8)	1-1/2 (38.1)	3/4 (19.05)	1/4 (6.35)	1-1/4 (31.75)	1.50 (.68)
GB2005B	2	168,840	200	2 (50.8)	3 (76.2)	5/8 (15.88)	1/4 (6.35)	1-1/4 (31.75)	1.70 (.77)
GB2007A	1	168,840	200	3 (76.2)	1-1/2 (38.1)	3/4 (19.05)	1/4 (6.35)	1-1/4 (31.75)	1.60 (.73)
GB2007B	2	168,840	200	3 (76.2)	3 (76.2)	5/8 (15.88)	1/4 (6.35)	1-1/4 (31.75)	1.80 (.82)

MISCELLANEOUS AND GROUNDING ALUMINUM STIRRUP CLAMP ALUMINUM CABLE TO TINNED COPPER LOOP

ALUMINUM
ACHLS

Aluminum alloy stirrup clamp for making temporary or permanent ground connections to aluminum cable. The copper stirrup loop is tin plated and is compressed into the body casting. Contact sealant is recommended.

Material: **Castings**—356-T6 aluminum alloy
Stirrup—copper tin plated
Hardware—aluminum alloy

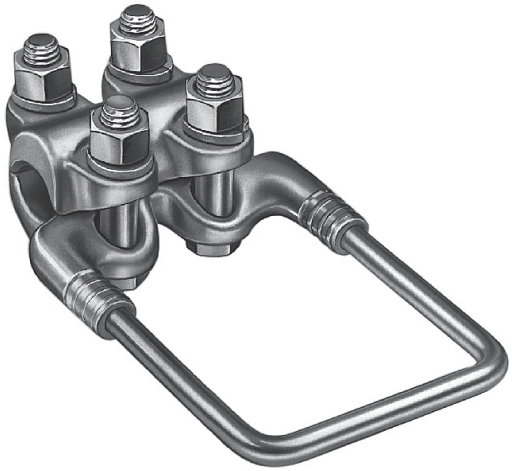

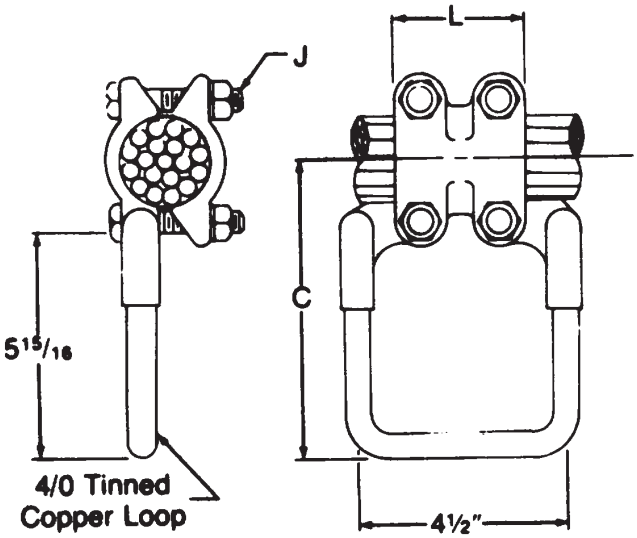

Product Data & Conductor Size

CATALOG NUMBER	ALUMINUM CONDUCTOR RANGE			DIMENSIONS INCHES (MM)			APPROX. WT. EACH LBS. (KG)
	AAC	ACSR	DIA.	L	C	J	
ACHLS13	900–1250 MCM	715–1113 MCM	1.081-1.293 (27.46-32.84)	3-3/4 (95.25)	7-3/8 (187.32)	5/8 (15.88)	1.5 (.68)
ACHLS16	1500–2000 MCM	1272 (45/7)–1590 (54/19)	1.382-1.632 (35.10-41.45)	4-1/2 (114.3)	7-5/8 (193.68)	5/8 (15.88)	2.7 (1.22)
ACHLS21	2500–3000 MCM	—	1.824-2.000 (46.33-50.8)	5 (127.0)	7-5/8 (193.68)	5/8 (15.88)	3.7 (1.68)

ALUMINUM

ATHLS

MISCELLANEOUS AND GROUNDING ALUMINUM STIRRUP CLAMP ALUMINUM TUBING TO TINNED COPPER LOOP

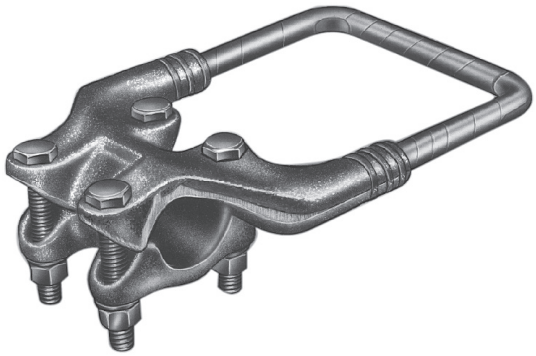

Aluminum alloy stirrup clamp for making temporary or permanent ground connections to aluminum tubing. The copper stirrup loop is tin plated and is compressed into the body casting. Contact sealant is recommended.

Material: **Castings**—356-T6 aluminum alloy
Stirrup—copper tin plated
Hardware—aluminum alloy

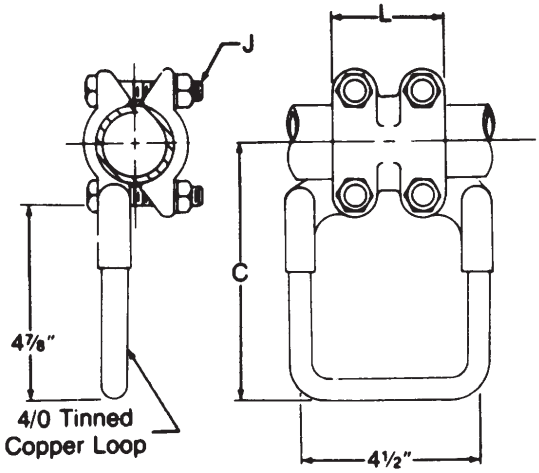

Product Data & Conductor Size

CATALOG NUMBER	ALUMINUM CONDUCTOR SIZE TUBING IPS/EHIPS	DIMENSIONS INCHES (MM)			APPROX. WT. EACH LBS. (KG)
		L	C	J	
ATHLS10024	1	2-3/4 (69.85)	6-1/4 (158.75)	1/2 (12.7)	1.3 (.59)
ATHLS12024	1-1/4	3 (76.2)	6-3/8 (161.92)	1/2 (12.7)	1.7 (.77)
ATHLS14024	1-1/2	3-1/4 (82.55)	6-1/2 (165.1)	1/2 (12.7)	1.8 (.82)
ATHLS20024	2	3-1/2 (88.9)	6-3/4 (171.45)	1/2 (12.7)	2.0 (.91)
ATHLS24024	2-1/2	3-3/4 (95.25)	7 (177.8)	5/8 (15.88)	3.0 (1.36)
ATHLS30024	3	4 (101.6)	7-3/8 (187.32)	5/8 (15.88)	3.7 (1.68)
ATHLS34024	3-1/2	4-1/4 (107.95)	7-5/8 (193.68)	5/8 (15.88)	3.9 (1.77)
ATHLS40024	4	4-1/4 (107.95)	7-7/8 (200.02)	5/8 (15.88)	4.5 (2.04)
ATHLS50024	5	5 (127)	8-5/16 (211.1)	5/8 (15.88)	6 (2.72)

WELDED GROUNDING STUD FOR TUBE

ALUMINUM
WTESR

Aluminum alloy weldment range-taking grounding stud for temporary safety grounding to aluminum tubing.

Material: **Casting**—356-T6 aluminum alloy

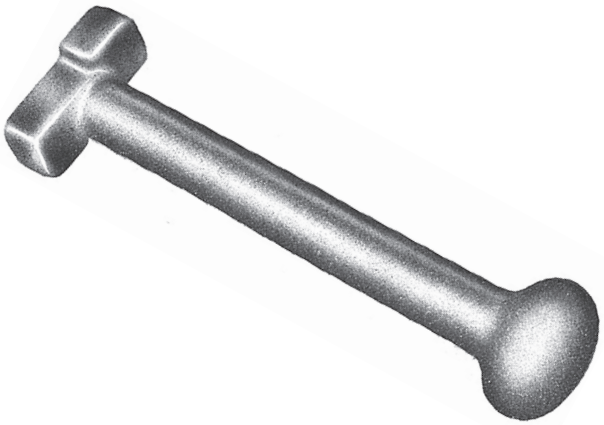

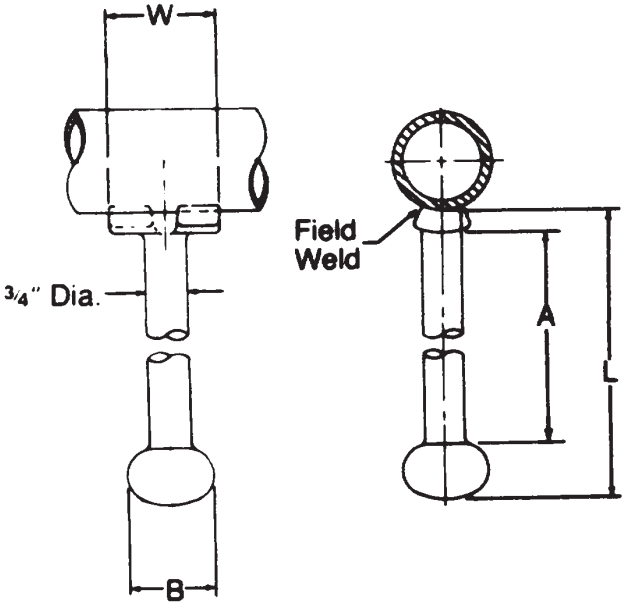

Product Data & Conductor Size

CATALOG NUMBER	ALUMINUM CONDUCTOR SIZE TUBING IPS/EHIPS	DIMENSIONS INCHES (MM)				APPROX. WT. EACH LBS. (KG)
		L	A	W	B	
WTESR1024	1 – 2-1/2	7-3/8 (187.32)	6 (152.4)	2 (50.8)	1-5/8 (41.28)	.5 (.23)
WTESR3060	3 – 6	7-1/2 (190.5)	6 (152.4)	2 (50.8)	1-5/8 (41.28)	.5 (.23)

STAINLESS STEEL BELLEVILLE SPRINGS MISCELLANEOUS AND GROUNDING

STAINLESS STEEL
BW

Note: Fasteners listed are offered only to replace original parts in new HPS products. For any other use, purchaser accepts full responsibility for part application and service performance.

Material: Stainless Steel

CATALOG NUMBER	COMPRESSION RATING —POUNDS—	BOLT DIA. INCHES	OUTSIDE DIA. INCHES	THICKNESS INCHES	APPROX. WT./100 LBS. (KG)
BW500	3,750	.50	1.06	.11	3.8 (1.72)

HEX HEAD BOLTS ALUMINUM

ALUMINUM
HBA

Material: 2024—T4 Aluminum alloy with #205 alumilite finish.

CATALOG NUMBER	DIE & THREAD —INCHES—	LENGTH —INCHES—	APPROX. WT. 100 LBS. (KG)
HBA150	.50"-13	1.50	4.2 (1.9)
HBA175		1.75	4.7 (2.1)
HBA200		2.00	5.2 (2.4)
HBA225		2.25	5.7 (2.6)
HBA250		2.50	6.2 (2.8)
HBA275		2.75	6.7 (3.0)
HBA300		3.00	7.2 (3.3)
HBA350		3.50	8.2 (3.7)

HEX HEAD BOLTS SILICON BRONZE

BRONZE
HBB

Material: High strength silicon bronze

CATALOG NUMBER	DIE & THREAD —INCHES—	LENGTH —INCHES—	APPROX. WT. 100 LBS. (KG)
HBB150	.50"-13	1.50	11.7 (5.0)
HBB175		1.75	13.1 (5.9)
HBB200		2.00	14.5 (6.6)
HBB225		2.25	15.9 (7.2)
HBB250		2.50	17.3 (7.8)
HBB275		2.75	18.7 (8.5)
HBB300		3.00	20.1 (9.1)
HBB350		3.50	22.8 (10.3)

MISC. AND GROUNDING HEX HEAD BOLTS GALVANIZED STEEL

GALVANIZED STEEL
HBG

Note: Fasteners listed are offered only to replace original parts in new HPS products. For any other use, purchaser accepts full responsibility for part application and service performance.

Material: Carbon Steel — galvanized

CATALOG NUMBER	DIE & THREAD —INCHES—	LENGTH —INCHES—	APPROX. WT. 100 LBS. (KG)
HBG150	.50"-13	1.50	11.6 (5.3)
HBG175		1.75	13.0 (5.9)
HBG200		2.00	14.5 (6.6)
HBG225		2.25	15.7 (7.1)
HBG250		2.50	17.3 (7.8)
HBG275		2.75	18.5 (8.4)

HEX HEAD BOLTS STAINLESS STEEL

STAINLESS STEEL
HBS

Material: 18-8 Stainless steel uncoated

CATALOG NUMBER	DIE & THREAD —INCHES—	LENGTH —INCHES—	APPROX. WT. 100 LBS. (KG)
HBS150	.50"-13	1.50	11.6 (5.3)
HBS175		1.75	13.1 (5.9)
HBS200		2.00	14.5 (6.6)
HBS225		2.25	15.7 (7.1)
HBS250		2.50	17.3 (7.8)
HBS275		2.75	18.5 (8.4)
HBS300		3.00	19.9 (9.0)
HBS350		3.50	23.0 (10.4)

NUTS
HN

MISC. AND GROUNDING HEX NUTS ALUMINUM, SILICON BRONZE, GALVANIZED STEEL & STAINLESS STEEL

Note: Fasteners listed are offered only to replace original parts in new HPS products. For any other use, purchaser accepts full responsibility for part application and service performance.

CATALOG NUMBER	MATERIAL	SIZE & THREAD INCHES	WIDTH INCHES	THICKNESS INCHES	APPROX. WT./100 LBS. (KG)
HNA500	Aluminum 6061-T6 Dry Wax Coated	.50-13	.75	.44	1.4 (.6)
HNB500	Silicon Bronze High Strength	.50-13	.75	.44	3.8 (1.7)
HNG500	Galvanized Steel	.50-13	.75	.44	3.8 (1.7)
HNS500	Stainless Steel 18-8	.50-13	.75	.44	3.8 (1.7)

LOCKWASHERS
HW

SPLIT TYPE LOCKWASHERS ALUMINUM, SILICON BRONZE, GALVANIZED STEEL & STAINLESS STEEL

CATALOG NUMBER	MATERIAL	BOLT DIA. INCHES	THICKNESS INCHES	APPROX. WT./100 LBS. (KG)
HWA500	Aluminum 7075-T6 Etch Finish	.50	.14	.7 (.32)
HWB500	Silicon Bronze High Strength	.50	.14	2.0 (.91)
HWG500	Galvanized Steel	.50	.14	1.8 (.82)
HWSL500	Stainless Steel 18-8	.50	.14	3.9 (1.77)

FLATWASHERS
HF

FLATWASHERS ALUMINUM, SILICON BRONZE, GALVANIZED STEEL & STAINLESS STEEL

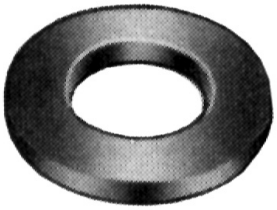

CATALOG NUMBER	MATERIAL	BOLT DIA. INCHES	OUTSIDE DIA. INCHES	THICKNESS INCHES	APPROX. WT./100 LBS. (KG)
HFA500	Aluminum 7075-T6 Plain	.50	1.06	.09	.7 (.32)
HFB500	Silicon Bronze High Strength	.50	1.06	.09	2.0 (.91)
HFG500	Galvanized Steel	.50	1.06	.11	1.8 (.82)
HFS500	Stainless Steel 18-8	.50	1.06	.08	2.1 (.9)

STAINLESS STEEL TERMINAL HARDWARE SETS

STAINLESS STEEL
SSHDW

Stainless steel two-hole or four-hole terminal hardware sets designed for joining aluminum to copper or bronze pads. Belleville washer torqued to 40 foot-pounds maintains pressure during expansion and contraction of the terminal pads.

Note: See component catalog pages for details.

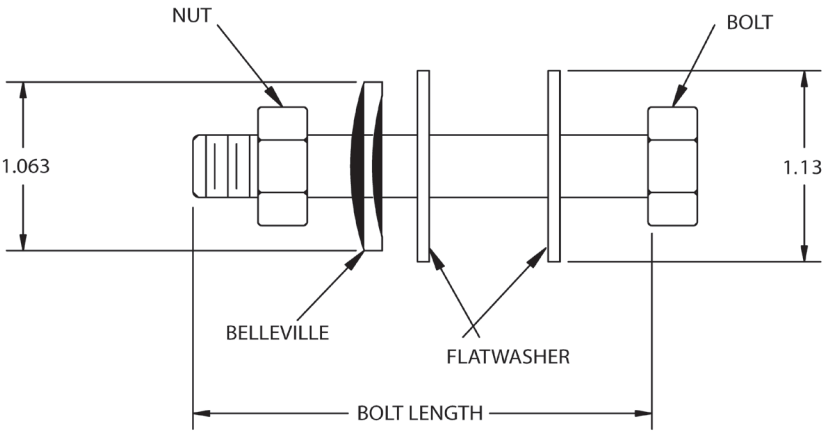

Product Data & Conductor Size

CATALOG NUMBER	BOLT LENGTH	QTY.	BOLT	QTY.	FLATWASHER	QTY.	BELLEVILLE	QTY.	NUT
SS2HDW200	1/2"-13 X 2.00"	2	HBS200	4	HFS5001	2	BW500	2	HNS500
SS2HDW225	1/2"-13 X 2.25"	2	HBS225	4	HFS5001	2	BW500	2	HNS500
SS2HDW250	1/2"-13 X 2.50"	2	HBS250	4	HFS5001	2	BW500	2	HNS500
SS4HDW200	1/2"-13 X 2.00"	4	HBS200	8	HFS5001	4	BW500	4	HNS500
SS4HDW225	1/2"-13 X 2.25"	4	HBS225	8	HFS5001	4	BW500	4	HNS500
SS4HDW250	1/2"-13 X 2.50"	4	HBS250	8	HFS5001	4	BW500	4	HNS500

Suggested method of mounting connectors

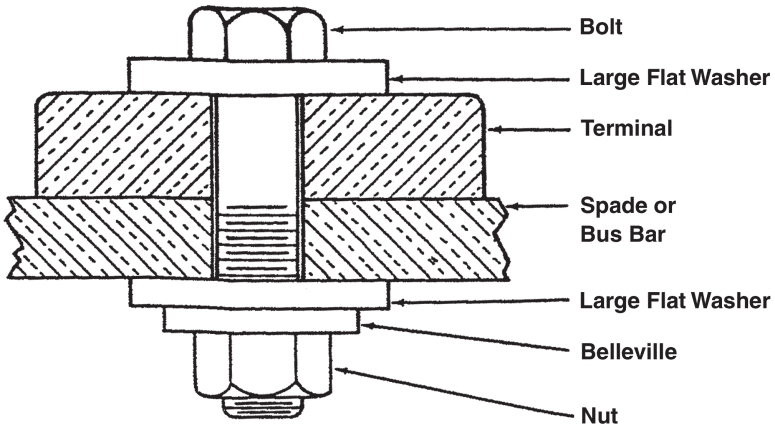

DISTRIBUTION / TRANSMISSION / SUBSTATION ELECTRICAL JOINT COMPOUND / INHIBITOR

Inhibitor Application Guide

CAT. NUM-BER	TRADE NAME	DESC / SIZE	SERVICE TEMP.	TO BE USED ON:			BASE OIL		GRIT TYPE			COLOR
				COMP-RESSION	GROOVE / BOLTED	PAD	SYNTH. / VEG.	PETROL.	FINE CON-DUCT	NON CON-DUCT	NON GRITTED	
VS8HTJC	ANDERSON	8 OZ. PLASTIC BOTTLE	-40°F to +480°F (-40°C to 250°C)	●	●	●	●		●			GRAY
HTJC16	FARGO	CAULK TUBE	-40°F to +480°F (-40°C to 250°C)	●	●	●	●		●			GRAY
UJC8	FARGO	8 OZ. PLASTIC BOTTLE	-40°F to +300°F (-40°C to 149°C)	●				●		●		TAN
UJC16	FARGO	CAULK TUBE	-40°F to +300°F (-40°C to 149°C)	●				●		●		TAN
GF138	FARGOLENE	8 OZ. PLASTIC BOTTLE	-40°F to +300°F (-40°C to 149°C)		●	●	●				●	GREEN
GF131	FARGOLENE	1 LB. CAN	-40°F to +300°F (-40°C to 149°C)		●	●	●				●	GREEN
GF133	FARGOLENE	8 LB. CAN	-40°F to +300°F (-40°C to 149°C)		●	●	●				●	GRAY
GF178	FARGOLENE	8 OZ. PLASTIC BOTTLE	-40°F to +300°F (-40°C to 149°C)		●	●	●				●	GRAY
GF171	FARGOLENE	1 LB. CAN	-40°F to +300°F (-40°C to 149°C)		●	●	●				●	GRAY
GF198	FARGOLENE	8 OZ. PLASTIC BOTTLE	-40°F to +300°F (-40°C to 149°C)	●			●			●		GRAY
GF191	FARGOLENE	1 LB. CAN	-40°F to +300°F (-40°C to 149°C)	●			●			●		GRAY
M19203	CHANCE ZLN-100	8 OZ. PLASTIC BOTTLE	-40°F to +300°F (-40°C to 149°C)	●				●		●		GRAY/ BROWN
M19204	CHANCE ZLN-100	4 OZ. PLASTIC BOTTLE	-40°F to +300°F (-40°C to 149°C)	●				●		●		GRAY/ BROWN
M19205	CHANCE ZLN-200	8 OZ. PLASTIC BOTTLE	-40°F to +300°F (-40°C to 149°C)	●			●			●		GRAY/ BROWN
M19206	CHANCE ZLN-200	4 OZ. PLASTIC BOTTLE	-40°F to +300°F (-40°C to 149°C)	●			●			●		GRAY/ BROWN
VS8B	ANDERSON VERSA-SEAL	8 OZ. PLASTIC BOTTLE	-40°F to +300°F (-40°C to 149°C)		●	●	●				●	YELLOW
VSG8B	ANDERSON VERSA-SEAL	8 OZ. PLASTIC BOTTLE	-40°F to +300°F (-40°C to 149°C)	●			●			●		BLUE
ING4	ANDERSON INHIBOX	4 OZ. PLASTIC BOTTLE	-40°F to +300°F (-40°C to 149°C)			●	●				●	GRAY
ING8	ANDERSON INHIBOX	8 OZ. PLASTIC BOTTLE	-40°F to +300°F (-40°C to 149°C)			●	●				●	GRAY
INGQC	ANDERSON INHIBOX	1 QUART CAN	-40°F to +300°F (-40°C to 149°C)			●	●				●	GRAY
INGGC	ANDERSON INHIBOX	1 GAL. CAN	-40°F to +300°F (-40°C to 149°C)			●	●				●	GRAY
I4	ANDERSON INHIBOX 220	4 OZ. PLASTIC BOTTLE	-40°F to +300°F (-40°C to 149°C)	●			●			●		GRAY
I8	ANDERSON INHIBOX 220	8 OZ. PLASTIC BOTTLE	-40°F to +300°F (-40°C to 149°C)	●			●			●		GRAY
IGC	ANDERSON INHIBOX 220	1 GAL. CAN		●			●			●		GRAY

NOTE: ALL COMPOUNDS HAVE A GREATER THAN 500°F (260°C) WITHSTAND TEMPERATURE.

DISTRIBUTION / TRANSMISSION / SUBSTATION ELECTRICAL JOINT COMPOUND / INHIBITOR

DESCRIPTION

INHIBITORS

HTJC

Anderson Versa-Seal® High Temperature Joint Compound (HTJC) is a synthetic-based, gritted, high-temperature compound developed for use on two-piece compression fittings on ACSS conductors rated 250° C.

HTJC employs conductive grit and thermally conductive filler to reduce connection resistance and allows connectors to operate at cooler temperatures.

This electrically and thermally conductive compound is also ideal for use on standard aluminum conductor (AAC and ACSR) fittings including Fargo Uni-Grip® deadends, splices and terminals.

HTJC fills internal voids in compression and bolted joints, sealing out moisture. HTJC is also an excellent choice for pad-to-pad applications as the grit is very fine and conductive.

See table labeled "Joint Compound Required" for Fargo transmission fittings.

See table labeled "Inhibitor Application Guide" for other HPS Inhibitors.

HTJC Inhibitor

CAT. NUMBER	TRADE NAME	DESC / SIZE	SERVICE TEMP.	TO BE USED ON: COMP-RESSION	TO BE USED ON: GROOVE / BOLTED	TO BE USED ON: PAD	BASE OIL: SYNTH. / VEG.	BASE OIL: PETROL.	GRIT TYPE: FINE CONDUCT	GRIT TYPE: NON CONDUCT	GRIT TYPE: NON GRITTED	COLOR
VS8HTJC	ANDERSON	8 OZ. PLASTIC BOTTLE	-40°F to +480°F (-40°C to 250°C)	●	●	●	●		●			GRAY
HTJC16	FARGO	CAULK TUBE	-40°F to +480°F (-40°C to 250°C)	●	●	●	●		●			GRAY

UJC

Fargo Universal Jointing Compound has been specifically designed for tension applications for compression transmission fittings to fill the internal voids, sealing out moisture and air.

UJC mineral oil based compound is suitable for standard aluminum conductor (AAC and ACSR) fittings.

See table labeled "Joint Compound Required" for Fargo transmission fittings.

See table labeled "Inhibitor Application Guide" for other HPS Inhibitors.

UJC Inhibitor

CAT. NUMBER	TRADE NAME	DESC / SIZE	SERVICE TEMP.	TO BE USED ON: COMP-RESSION	TO BE USED ON: GROOVE / BOLTED	TO BE USED ON: PAD	BASE OIL: SYNTH. / VEG.	BASE OIL: PETROL.	GRIT TYPE: FINE CONDUCT	GRIT TYPE: NON CONDUCT	GRIT TYPE: NON GRITTED	COLOR
UJC8	FARGO	8 OZ. PLASTIC BOTTLE	-40°F to +300°F (-40°C to 149°C)	●				●		●		TAN
UJC16	FARGO	CAULK TUBE	-40°F to +300°F (-40°C to 149°C)	●				●		●		TAN

DISTRIBUTION / TRANSMISSION / SUBSTATION ELECTRICAL JOINT COMPOUND / INHIBITOR

DESCRIPTION

INHIBITORS

GF

Fargolene® inhibitors are specially compounded corrosion inhibitors recommended for the contact surfaces of all electrical connections to seal out moisture and protect the joint.

- Stable over a wide range of temperatures.
- Available in gritted and non-gritted formulations.
- Organic and synthetic base varieties.
- Workable at subfreezing temperatures and will adhere to cold metal surfaces permitting easy application either directly on the contact surfaces from the squeeze bottle or by troweling with a knife.
- Water repellent, weather resistant, and inert to copper, aluminum, zinc, tin, cadmium, steel, and neoprene rubber; providing a stable compatible corrosion inhibitor.
- On grit bearing inhibitor, the fine powdered grit punctures through high resistance oxide films, improving the electrical connection, as well as the mechanical holding strength.
- For the very best results, a thorough cleaning of the conductor and connector contact areas and a liberal application of Fargolene inhibitor is recommended.

See application guide for more information.

See table labeled "Inhibitor Application Guide" for other HPS Inhibitors.

GF Inhibitor

CAT. NUMBER	TRADE NAME	DESC / SIZE	SERVICE TEMP.	TO BE USED ON: COMP-RESSION	TO BE USED ON: GROOVE / BOLTED	TO BE USED ON: PAD	BASE OIL: SYNTH. / VEG.	BASE OIL: PETROL.	GRIT TYPE: FINE CONDUCT	GRIT TYPE: NON CONDUCT	GRIT TYPE: NON GRITTED	COLOR
GF138	FARGOLENE	8 OZ. PLASTIC BOTTLE	-40°F to +300°F (-40°C to 149°C)		●	●	●				●	GREEN
GF158	FARGOLENE	8 OZ. PLASTIC BOTTLE	-40°F to +300°F (-40°C to 149°C)	●			●			●		GREEN
GF178	FARGOLENE	8 OZ. PLASTIC BOTTLE	-40°F to +300°F (-40°C to 149°C)		●	●	●				●	GRAY
GF198	FARGOLENE	8 OZ. PLASTIC BOTTLE	-40°F to +300°F (-40°C to 149°C)	●			●			●		GRAY
GF193*	FARGOLENE	8 LB. CAN	-40°F to +300°F (-40°C to 149°C)	●			●			●		GRAY

DISTRIBUTION / TRANSMISSION / SUBSTATION ELECTRICAL JOINT COMPOUND / INHIBITOR

DESCRIPTION
INHIBITORS

ZLN

Chance® ZLN inhibitor improves and stabilizes aluminum, copper, and bi-metallic connections.

- Available in petroleum and non-petroleum based formulations.
- Water resistant.
- Gritted formula to fill non-contact surface junctions.

See application guide for more information.

See table labeled "Inhibitor Application Guide" for other HPS inhibitors.

ZLN Inhibitor

CAT. NUMBER	TRADE NAME	DESC / SIZE	SERVICE TEMP.	TO BE USED ON: COMP-RESSION	GROOVE / BOLTED	PAD	BASE OIL SYNTH. / VEG.	PETROL.	GRIT TYPE FINE CONDUCT	NON CONDUCT	NON GRIT-TED	COLOR
M19203	CHANCE ZLN-100	8 OZ. PLASTIC BOTTLE	-40°F to +300°F (-40°C to 149°C)	●				●		●		GRAY/ BROWN
M19204	CHANCE ZLN-100	4 OZ. PLASTIC BOTTLE	-40°F to +300°F (-40°C to 149°C)	●				●		●		GRAY/ BROWN
M19205	CHANCE ZLN-100	8 OZ. PLASTIC BOTTLE	-40°F to +300°F (-40°C to 149°C)	●			●			●		GRAY/ BROWN

VERSA-SEAL
155

SF 39

155

Type 155, Anderson Versa-Seal® electrical joint compound is recommended for use on all bare aluminum and copper application, and is a petroleum-based formulation.

- 155 is recommended for flat-to-flat and grooved bolted connections
- Tan-tinted color

See table labeled "Inhibitor Application Guide" for other HPS inhibitors.

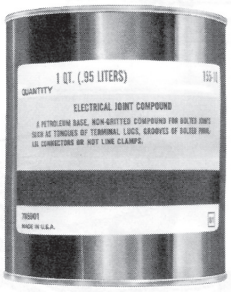

155 Inhibitor

CAT. NUMBER	TRADE NAME	DESC / SIZE	SERVICE TEMP.	TO BE USED ON: COMP-RESSION	GROOVE / BOLTED	PAD	BASE OIL SYNTH. / VEG.	PETROL.	GRIT TYPE FINE CONDUCT	NON CONDUCT	NON GRIT-TED	COLOR
155QC	ANDERSON VERSA-SEAL	1 QUART CAN	-40°F to +300°F (-40°C to 149°C)		●	●		●			●	TAN

DISTRIBUTION / TRANSMISSION / SUBSTATION ELECTRICAL JOINT COMPOUND / INHIBITOR

DESCRIPTION
INHIBITORS

VERSA-SEAL®
VS / VG

VS type Anderson VERSA-SEAL®, non-gritted electrical joint compound is UL listed for all aluminum and copper applications, such as pad-to-pad surfaces.

VSG type Anderson Versa-Seal®, gritted electrical joint compound is UL listed for all aluminum and copper compression connections. It is not recommended for use as a lubricant on threaded fittings as improper torque values or thread galling may occur.

- **VS** is a non-petroleum, non-toxic, non-gritted compound for use where EPDM, natural rubber, as well as polyethylene insulating products, may come in contact with the sealant.
- **VSG** is a non-petroleum, non-toxic gritted compound for use where EPDM, natural rubber, as well as polyethylene insulating products, may come in contact with the sealant.
- **VS** is recommended for bolted joints, flat-to-flat contact surfaces, terminal and lug tongues, grooves of bolted parallel connectors or hot-line clamps, lubricating insulating sleeves and caps, and for improving electrical conductivity on all metallic conduit threads.
- **VSG** is recommended for NEMA minimum tension compression terminals. VSG helps break oxide films on contact surfaces while enhancing conductivity between conductor strands with its conductive grit. Also for two-piece full tension dead-ends and sleeves.
- Yellow tint for **VS** identification.
- Blue tint for **VSG** identification.

See table labeled "Inhibitor Application Guide" for other HPS inhibitors.

VS / VSG Inhibitor

CAT. NUMBER	TRADE NAME	DESC / SIZE	SERVICE TEMP.	TO BE USED ON:			BASE OIL		GRIT TYPE			COLOR
				COMP-RESSION	GROOVE / BOLTED	PAD	SYNTH. / VEG.	PETROL.	FINE CON-DUCT	NON CONDUCT	NON GRIT-TED	
VS8B	ANDERSON VERSA-SEAL	8 OZ. PLASTIC BOTTLE	-40°F to +300°F (-40°C to 149°C)		●	●	●				●	YELLOW
VSG8B	ANDERSON VERSA-SEAL	8 OZ. PLASTIC BOTTLE	-40°F to +300°F (-40°C to 149°C)	●			●			●		BLUE

DISTRIBUTION / TRANSMISSION / SUBSTATION ELECTRICAL JOINT COMPOUND / INHIBITOR

DESCRIPTION
INHIBITORS

INHIBOX
ING

ING series Inhibox non-gritted, non-toxic electrical joint compound is recommended for rigid bus connections between aluminum-to-aluminum and aluminum-to-copper applications.

- Non-gritted with zinc flakes.
- Non-rubber swelling, electrically conductive contact aid and sealant.
- Recommended for flat-to-flat contact surfaces.
- Improves electrical continuity for grounding on threaded metal conduit.

See application guide for more information.

See table labeled "Inhibitor Application Guide" for other HPS inhibitors.

ING Inhibitor

CAT. NUMBER	TRADE NAME	DESC / SIZE	SERVICE TEMP.	TO BE USED ON: COMP-RESSION	GROOVE / BOLTED	PAD	BASE OIL SYNTH. / VEG.	PETROL.	GRIT TYPE FINE CONDUCT	NON CONDUCT	NON GRIT-TED	COLOR
ING4	ANDERSON INHIBOX 220	4 OZ. PLASTIC BOTTLE	-40°F to +300°F (-40°C to 149°C)		●	●	●				●	GRAY
ING8	ANDERSON INHIBOX 220	8 OZ. PLASTIC BOTTLE	-40°F to +300°F (-40°C to 149°C)		●	●	●				●	GRAY
INGGC	ANDERSON INHIBOX 220	1 GAL. CAN	-40°F to +300°F (-40°C to 149°C)		●	●	●				●	GRAY

INHIBOX
I220

- Contains aluminum oxide grit and zinc flakes to create fresh metal interfaces.
- Non-rubber swelling, electrically conductive contact aid and sealant.
- Recommended for non-tension compression connectors on cable conductors.
- Not recommended as a lubricant.

See table labeled "Inhibitor Application Guide" for other HPS inhibitors.

I220 Inhibitor

CAT. NUMBER	TRADE NAME	DESC / SIZE	SERVICE TEMP.	TO BE USED ON: COMP-RESSION	GROOVE / BOLTED	PAD	BASE OIL SYNTH. / VEG.	PETROL.	GRIT TYPE FINE CONDUCT	NON CONDUCT	NON GRIT-TED	COLOR
I4	ANDERSON INHIBOX 220	4 OZ. PLASTIC BOTTLE	-40°F to +300°F (-40°C to 149°C)	●			●			●		GRAY
I8	ANDERSON INHIBOX 220	8 OZ. PLASTIC BOTTLE	-40°F to +300°F (-40°C to 149°C)	●			●			●		GRAY
IQC	ANDERSON INHIBOX 220	1 QUART CAN	-40°F to +300°F (-40°C to 149°C)	●			●			●		GRAY

HUBBELL

SUBSTATION CONNECTORS

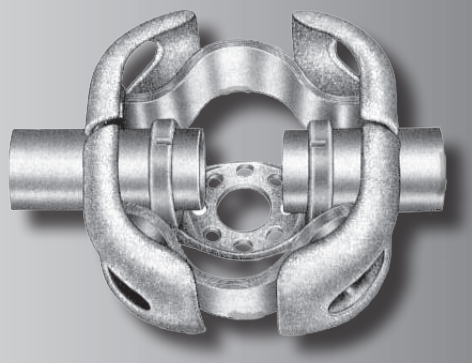

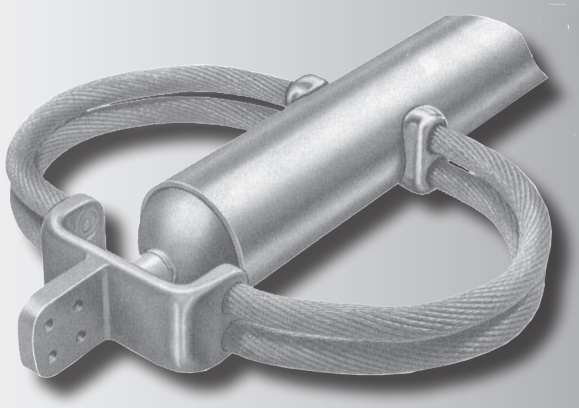

SECTION EHV

EHV CONNECTORS

- Terminals
- Couplers
- Tees
- Bus Supports
- Stud Connectors
- End Bells
- Specialties

EHV CONNECTORS

EHV TERMINALS

ACF (EHV) ..... ALUMINUM BOLTED TUBE TO FLAT PAD EHV-6
ACFS (EHV) ..... ALUMINUM BOLTED TUBE TO FLAT PAD, SHORT EHV-7
CCL-EHV ..... ALUMINUM COMPRESSION TUBE TO FLAT PAD EHV-4
CCLS-EHV ..... ALUMINUM COMPRESSION TUBE TO FLAT PAD, SHORT EHV-5
EVKET ..... ALUMINUM WELD EXPANSION, TUBE TO FLAT EHV-15
EVKETVH ..... ALUMINUM WELD EXPANSION, TUBE TO FLAT EHV-16
EVT2FD ..... ALUMINUM BIFURCATING TERMINAL EHV-19
HV2CF ..... ALUMINUM BOLTED, 2 CABLES TO FLAT EHV-3
HVCF ..... ALUMINUM BOLTED, CABLE TO FLAT EHV-2
HVETF/EVETF ..... ALUMINUM WELDED EXPANSION EHV-17
HVRTE ..... ALUMINUM WELDED EXPANSION EHV-14
HVSTF/EVSTF ..... ALUMINUM BOLTED TUBE TO FLAT EHV-1
W2CF-EHV ..... ALUMINUM WELDED, 2 CABLES TO FLAT EHV-13
WCF-EHV ..... ALUMINUM WELDED, CABLE TO FLAT EHV-12
WST2F-EHV ..... ALUMINUM EXTERNAL WELD, TUBE TO 2 FLAT EHV-11
WSTFE-EHV ..... ALUMINUM EXTERNAL WELD, TUBE TO FLAT EHV-8
WSTFX-EHV ..... ALUMINUM INTERNAL WELD, TUBE TO FLAT EHV-9
WSTFXH-EVH ..... ALUMINUM INTERNAL WELD, TUBE TO FLAT EHV-10

EHV COUPLERS

EVST2F ..... ALUMINUM WELDED, BIFURCATING TUBE COUPLER EHV-26
EVST3F ..... ALUMINUM WELDED, TRIFURCATING TUBE COUPLER EHV-25
EVWETTR ..... ALUMINUM WELDED, EXPANSION TUBE COUPLER EHV-24
HVSTT/EVSTT ..... ALUMINUM BOLTED TUBE COUPLER EHV-20
HVWTEB/EVWTEB ..... ALUMINUM TUBULAR WELDED, EHV VARIABLE COUPLER EHV-67
WCI (EHV) ..... ALUMINUM WELDED TUBE COUPLER EHV-23
WLI45-EHV ..... ALUMINUM WELDED TUBE COUPLER @ 45° EHV-22
WLI90-EHV ..... ALUMINUM WELDED TUBE COUPLER @ 90° EHV-22

EHV TEES

EVTCF ..... ALUMINUM BOLTED, CABLE TO FLAT EHV-30
EVTT3F ..... ALUMINUM WELDED, TRIFURCATING, TUBE TO 3 FLAT EHV-41
EVWTF ..... ALUMINUM WELDED, TUBE TO FLAT, SELF SHIELDING EHV-40
HVTBCC/EVTBCC ..... ALUMINUM BOLTED CABLE MAIN TO CABLE TAP EHV-31
HVTTF/EVTTF ..... ALUMINUM BOLTED TUBE MAIN TO FLAT EHV-29
HVTTT/EVTTT ..... ALUMINUM BOLTED TUBE MAIN TO TUBE TAP EHV-27
ORT21 (EHV) ..... ALUMINUM COMPRESSION CABLE MAIN TO FLAT EHV-34
ORT22 (EHV) ..... ALUMINUM COMPRESSION CABLE MAIN TO CABLE TAP EHV-33
WTT (EHV) ..... ALUMINUM WELDED, TUBE TO TUBE, STRAIGHT EHV-35
WTT15 (EHV) ..... ALUMINUM WELDED, TUBE TO TUBE TAP, @ 15° EHV-37
WTT215 (EHV) ..... ALUMINUM WELDED, TUBE TO 2 TUBE TAPS @ 15° EACH EHV-38
WTTFR (EHV) ..... ALUMINUM WELDED, TUBE TO FLAT EHV-39

EHV CONNECTORS (CONTINUED)

EHV BUS SUPPORTS

EVBCF ..... ALUMINUM BOLTED BUS SUPPORT, FLAT EHV-50
EVKES ..... ALUMINUM WELDED BUS SUPPORT, TUBE, EXPANSION EHV-53
EVT2S ..... ALUMINUM BOLTED BUS SUPPORT, TUBE, DOUBLE MOUNT EHV-57
EVTS ..... ALUMINUM BOLTED BUS SUPPORT, TUBE EHV-42
EVVBS ..... ALUMINUM WELDED BUS SUPPORT, TUBE, VERTICAL EHV-51
HVCS ..... ALUMINUM BOLTED BUS SUPPORT, CABLE EHV-43
HVDCH/EVDCH ..... ALUMINUM BOLTED BUS SUPPORT, 2 CABLE SPACER EHV-46
HVDCS/EVDCS ..... ALUMINUM BOLTED BUS SUPPORT, 2 CABLE SPACER EHV-44
HVETS/EVETS ..... ALUMINUM WELDED BUS SUPPORT, TUBE, EXPANSION EHV-54
HVRTS ..... ALUMINUM WELDED BUS SUPPORT, TUBE, EXPANSION EHV-52
HVSCCS ..... ALUMINUM BOLTED BUS SUPPORT, TUBE, SUSPENSION EHV-56
WTH-EHV ..... ALUMINUM WELDED BUS SUPPORT, TUBE, HOOK-ON EHV-48
WURE-EHV ..... ALUMINUM WELDED BUS SUPPORT, TUBE EHV-47
WUR-EHV ..... ALUMINUM WELDED BUS SUPPORT, TUBE EHV-49

EHV STUD CONNECTORS

BHVSD ..... BRONZE STUD, BOLTED TO FLAT EHV-59
BHVSF ..... BRONZE STUD, BOLTED TO FLAT EHV-58
EVSF2 ..... ALUMINUM STUD, BOLTED TO BIFURCATING FLAT EHV-61
HVEDST/EVEDST ..... ALUMINUM STUD, WELDED TO TUBE EHV-62
HVEDST-90/EVEDST-90 ..... ALUMINUM STUD, WELDED TO TUBE @ 90° TO STUD EHV-64
HVSF ..... ALUMINUM STUD, BOLTED TO FLAT EHV-60

EHV END BELLS

HVTEB/EVTEB ..... ALUMINUM TUBULAR BOLTED, END BELL EHV-66
HVWTEB/EVWTEB ..... ALUMINUM TUBULAR WELDED, END BELL EHV-67

EHV SPECIALTIES

EVEFD ..... ALUMINUM EXTENSION PAD EHV-80
EVHS ..... ALUMINUM HARDWARE SHIELD EHV-78
EVS3C ..... ALUMINUM SPACER FOR 3 CABLES EHV-74
EVTGS ..... ALUMINUM GROUNDING STUD TO TUBE, BOLTED EHV-68
EVWTGSR ..... ALUMINUM GROUNDING STUD TO TUBE, WELDED EHV-71
HVCGS ..... ALUMINUM GROUNDING STUD TO CABLE, BOLTED EHV-69
HVHS-90-D ..... ALUMINUM HARDWARE SHIELD @ 90° EHV-79
HVPC/EVPC ..... ALUMINUM PARALLEL CONNECTOR EHV-77
HVS2C/EVS2C ..... ALUMINUM SPACER FOR 2 CABLES EHV-72
HVS2CT/EVS2CT ..... ALUMINUM SPACER FOR 2 CABLES TO FLAT EHV-75
WEPE ..... ALUMINUM WELDED END PLUG-EYE EHV-70

EXTRA HIGH VOLTAGE SUBSTATION CONNECTORS

We have been actively engaged in the design, development and production of substation power connectors for Extra High Voltage (EHV) applications since 1957. The experience gained through research and development in designing substation connectors for use at low voltage levels helped in planning ahead for the EHV era.

The use of Extra High Voltage has evolved as an economic necessity rather than a glamorous alternate. With large generating stations being located at fuel availability points in remote areas, plus the requirement for utility interconnections, the need is increasing to transfer larger and larger blocks of power over greater distances.

Extra High Voltage was and is necessary; however, existing designs of equipment and connectors had to be altered to handle the higher voltages. EHV connectors must operate free of corona and maintain the mechanical strength and current transfer capabilities required of other power connectors.

As an established leader in the Extra High Voltage substation connector market, we were one of the 345 KV connector pioneers and the first manufacturer to supply connectors for 500 and 765 KV substations. And, a major percentage of the EHV connectors in service today were designed and supplied by us. Our continuing efforts have aided the electrical industry in the development of design standards and performance criteria for these connectors.

Our goals coincide with those of the electric utility industry...to provide an ever improving product at the lowest possible price.

EHV BOLTED TERMINALS FOR TUBE TO FLAT PAD TYPE HVSTF/EVSTF

ALUMINUM
HVSTF/EVSTF

Aluminum alloy, tube to flat, terminal connectors are designed for corona free service at 345 and 500 KV respectively. Tongue mounting hardware is not furnished as part of this catalog number. Hardware must be ordered separately, specifying thickness of the pad to be clamped. *The hardware shield is furnished as part of this catalog number.* Tongue holes have NEMA spacing. Contact sealant is recommended. Terminals with side formed contact may be ordered by adding "-SF" to catalog number (example: HVSTF-34-D-SF).

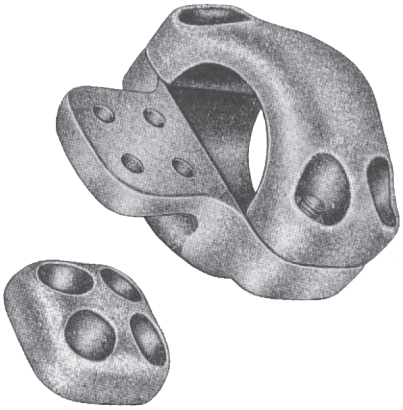

Material: **Castings** – 356-T6 aluminum alloy
Clamping Hardware – aluminum alloy

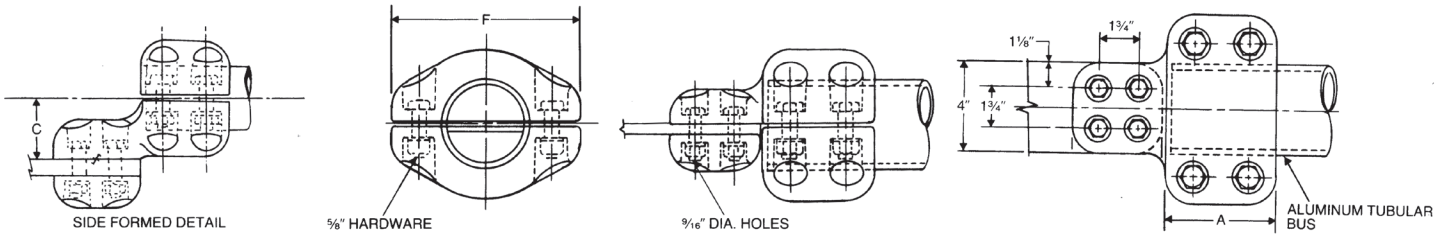

345 kV AND 500 kV LINE-TO-LINE APPLICATIONS

CATALOG NUMBER	ALUMINUM CONDUCTOR SIZE TUBING IPS/EHIPS	DIMENSIONS - INCHES (MM)			APPROX. WT. EA. LBS.(KG)
		A	C	F	
345 KV APPLICATIONS					
HVSTF20D	2	4 (101.60)	2-1/2 (63.50)	6-1/4 (158.75)	8.0 (3.63)
HVSTF24D	2-1/2	4 (101.60)	2-3/4 (69.85)	6-1/2 (165.10)	8.9 (4.04)
HVSTF30D	3	4 (101.60)	3-1/16 (77.79)	7-3/16 (182.56)	9.2 (4.17)
HVSTF34D	3-1/2	4-1/4 (107.95)	3-5/16 (84.14)	7-7/8 (200.03)	9.8 (4.45)
HVSTF40D	4	4-1/4 (107.95)	3-9/16 (90.49)	8-3/8 (212.73)	10.7 (4.85)
500 KV APPLICATIONS					
EVSTF24D	2-1/2	5 (127.00)	3-5/16 (84.14)	7-7/8 (200.03)	13.2 (5.99)
EVSTF30D	3	5 (127.00)	3-5/16 (84.14)	7-7/8 (200.03)	13.1 (5.94)
EVSTF34D	3-1/2	5 (127.00)	3-9/16 (90.49)	8 (203.20)	13.8 (6.27)
EVSTF40D	4	5 (127.00)	3-13/16 (96.84)	8-7/8 (203.20)	14.4 (6.53)
EVSTF50D	5	6 (152.40)	4-5/16 (109.54)	10 (254.00)	19.9 (9.03)

EHV BOLTED TERMINALS FOR CABLE TO FLAT PAD TYPE HVCF

ALUMINUM
HVCF

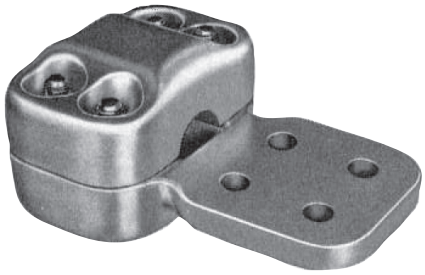

Aluminum alloy, cable to flat, terminals are designed for corona free service at 345 and 500 KV respectively. Single cable diameter under 1.76 inch for 345 KV and 2.50 inch diameter for 500 KV may not be corona free unless conductors are bundled. *This catalog number does not include tongue mounting hardware or bolt shields;* these components must be ordered separately. (See Type EVHS-D bolt shields.) Bolt shields must be used on both sides of pad to assure corona free performance. Tongue holes have NEMA spacing. Contact sealant is recommended.

Add suffix: "-HS" for one hardware shield, and "-HS2" for two hardware shields.

Material: **Castings** – 356-T6 aluminum alloy
Clamping Hardware – aluminum alloy

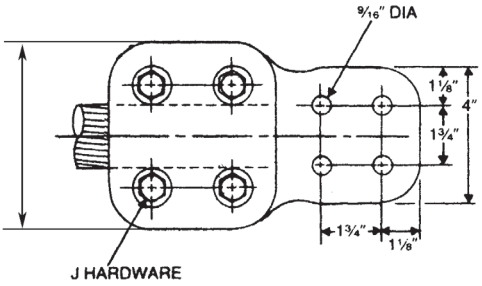

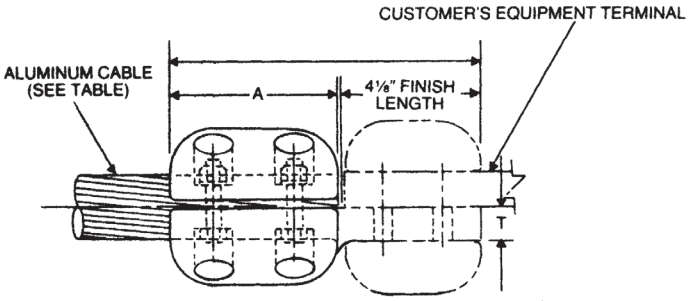

345 kV AND 500 kV LINE-TO-LINE APPLICATIONS

CATALOG NUMBER	ALUMINUM CONDUCTOR RANGE					DIMENSIONS-INCHES (MM)					APPROX. WT. EA. LBS.(KG)
	DIA. IN.	AAC		ACSR (AL/ST)		A	T	W	J	L	
HVCF1172D	1.072-1.172	874.5 1033.5	(37 Str.) (61 Str.) (37 Str.) (61 Str.)	715.5 715.5 795 795 795 954	30/19 24/7 54/7 26/7 30/19 45/7	4 (101.60)	3/4 (19.05)	4-1/2 (114.30)	1/2 (12.70)	8-3/8 (212.7)	5.2 (2.36)
HVCF1300D	1.200-1.300	1100 1272	(91 Str.) (61 Str.)	1033.5 1113	45/7 54/7 45/7 54/19	4 (101.60)	3/4 (19.05)	4-1/2 (114.30)	1/2 (12.70)	8-3/8 (212.7)	5.1 (2.31)
HVCF1382D	1.282-1.382	1250 1431	(91 Str.) (61 Str.)	1113 1272	54/19 45/7 43/19	4 (101.60)	3/4 (19.05)	4-5/8 (117.48)	1/2 (12.70)	8-1/4 (209.6)	5.2 (2.36)
HVCF1545D	1.445-1.545	1590 1750	(61 Str.) (91 Str.) (127 Str.)	1431 1590	54/19 45/7 54/19	4 (101.60)	7/8 (22.23)	5-1/8 (130.18)	5/8 (15.88)	8-1/4 (209.6)	6.7 (3.04)
†HVCF1824D	1.724-1.824	2500	(91 Str.) (127 Str.)	2167 2156	72/7 84/19	6-3/4 (171.45)	1 (25.40)	5-1/2 (139.70)	5/8 (15.88)	11 (279.4)	11.6 (5.26)

†6 Clamping Bolts

EHV BOLTED TERMINALS
TWO CABLES TO FLAT PAD TYPE HV2CF

ALUMINUM
HV2CF

Aluminum alloy, cable to flat, terminals are designed for corona free service at 345 KV. *This catalog number does not include tongue mounting hardware or bolt shields*; these components must be ordered separately. Bolt shields must be used on both sides of pad to assure corona free performance. Tongue holes have NEMA spacing. Contact sealant is recommended.

Material: **Castings** – 356-T6 aluminum alloy
Clamping Hardware – aluminum alloy

Add suffix: "-HS" for one hardware shield, and "-HS2" for two hardware shields.

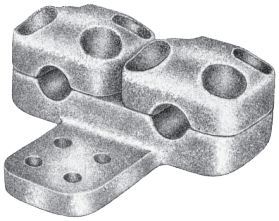

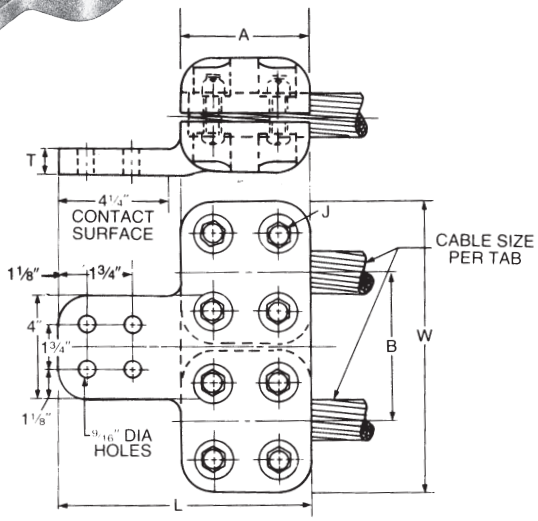

345 kV AND 500 kV LINE-TO-LINE APPLICATIONS

CATALOG NUMBER	ALUMINUM CONDUCTOR RANGE					DIMENSIONS-INCHES (MM)						APPROX. WT. EA. LBS.(KG)
	DIA. IN.	AAC		ACSR		A	T	L	W	J	B	
HV2CF1028D	.928–1.028	650 795	(61 Str.) (91 Str.) (37 Str.) (91 Str.)	636 666.6	36/1 24/7 26/7 18/1 36/1 24/7	4 (101.60)	1 (25.40)	8-1/2 (215.90)	9-1/8 (231.78)	1/2 (12.70)	4-5/8 (117.48)	6.9 (3.13)
HV2CF1163D	1.063–1.163	874.5 954	(37 Str.) (61 Str.) (37 Str.) (61 Str.)	795 874.5	45/7 24/7 54/7 26/7 30/19 54/7	4 (101.60)	1 (25.40)	8-1/2 (215.90)	9-1/8 (231.78)	1/2 (12.70)	4-5/8 (117.48)	6.9 (3.13)
HV2CF1196D	1.096–1.196	954 1033.5	(37 Str.) (61 Str.) (37 Str.) (61 Str.)	795 1033.5	26/7 30/19 36/1	4 (101.60)	1 (25.40)	8-1/2 (215.90)	9-1/8 (231.78)	1/2 (12.70)	4-5/8 (117.48)	6.9 (3.13)
HV2CF1300D	1.200–1.300	1100 1272	(91 Str.) (61 Str.)	1033.5 1113	45/7 54/7 45/7 54/19	4 (101.60)	1 (25.40)	8-1/2 (215.90)	9-1/8 (231.78)	1/2 (12.70)	4-5/8 (117.48)	6.9 (3.13)
HV2CF1382D	1.282–1.382	1250 1431	(91 Str.) (61 Str.)	1113 1272	54/19 54/19	4 (101.60)	1 (25.40)	8-1/2 (215.90)	9-3/8 (238.13)	1/2 (12.70)	4-3/4 (120.65)	7.8 (3.54)
HV2CF1454D	1.354–1.454	1400 1590	(91 Str.) (61 Str.) (91 Str.)	1272 1431	54/19 45/7	4 (101.60)	1 (25.40)	8-1/2 (215.90)	9-3/4 (247.65)	5/8 (15.88)	4-15/16 (125.41)	8.1 (3.68)
HV2CF1650D	1.550–1.650	1900 2000	(127 Str.) (91 Str.) (127 Str.)	1780	84/19	4 (101.60)	1 (25.40)	8-1/2 (215.90)	10-3/8 (263.53)	5/8 (15.88)	5-1/4 (133.35)	8.7 (3.95)
*HV2CF1824D	1.724–1.824	2500	(91 Str.) (127 Str.)	2167 2156	72/7 84/19	6-3/4 (171.45)	1 (25.40)	11-1/4 (285.75)	11-1/8 (282.58)	5/8 (15.88)	5-5/8 (142.85)	11.3 (5.13)

** Furnished with 12 clamping bolts.*

EHV COMPRESSION TERMINALS FOR CABLE TYPE CCL-EHV

ALUMINUM
CCL-EHV

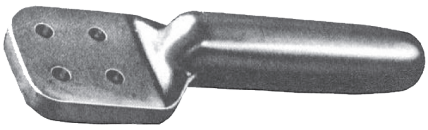

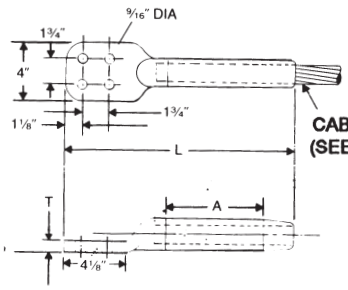

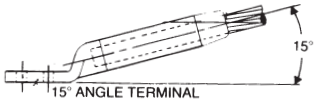

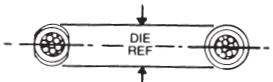

FIGURE 1 FIGURE 2

Aluminum compression terminal connectors are designed for corona free service at 500 KV. Single cable diameter under 1.76 inch for 345 KV and 2.50 inch diameter for 500 KV may not be corona free unless conductors are bundled. These connectors can be compressed with conventional tooling. The barrel is factory inhibited and the entire connector is sealed in a clear plastic bag. *Tongue mounting hardware and bolt shields are not part of this catalog number*, and must be ordered separately. For 15° angle terminals add "15" to the catalog number (example: CCL-1659-D-15-EHV). For conductors not shown and for angles other than 15°, contact factory for information and dimensions. Pad holes have NEMA spacing. Contact sealant is recommended.

Material: **Casting** – 99 aluminum alloy

For use with conventional compression tooling refer to chart CC-4872 for tool and die information see page 85.
Add "-XY" for double contact surfaces.

345 kV AND 500 kV LINE-TO-LINE APPLICATIONS

CATALOG NUMBER	ALUMINUM CONDUCTOR RANGE			DIE REF.	FIGURE NUMBER	DIMENSIONS-INCHES (MM)			APPROX. WT. EA. LBS.(KG)
	DIA. IN.	AAC	ACSR			A	T	L	
CCL1036DEHV	1.019–1.036	795 (37 Str.) 800 (61 Str.)	636 30/19 715.5 54/7	1.843	1	8-1/2 (215.90)	3/4 (19.05)	13-7/8 (352.43)	2.8 (1.27)
CCL1051DEHV	1.040–1.063	–	795 36/1 795 47/7 715.5 26/7 26/7	1.843	1	8-1/2 (215.90)	3/4 (19.05)	13-7/8 (352.43)	2.7 (1.22)
CCL1108DEHV	1.077–1.108	874.5 (37 Str.) (61 Str.) 900 (37 Str.) (91 Str.) (61 Str.)	715.5 30/19 24/7 795 54/7 26/7	1.843	1	8-1/2 (215.90)	3/4 (19.05)	13-7/8 (352.43)	2.9 (1.32)
CCL1162DEHV	1.124–1.162	954 (37 Str.) 1000 (61 Str.) (61 Str.)	45/7 900 54/7 795 30/19 954 86/1 874 54/7	2.125	1	9-1/4 (234.95)	3/4 (19.05)	14-5/8 (371.48)	4.0 (1.81)
CCL1196DEHV	1.165–1.196	(37 Str.) 1033.5 (61 Str.)	45/7 954 54/7 1033.5 36/1	2.125	1	9-1/4 (234.95)	3/4 (19.05)	14-5/8 (371.48)	4.0 (1.81)
CCL1246DEHV	1.209–1.263	1100 (91 Str.) 1113 (61 Str.) 1192.5 (61 Str.) 1200 (91 Str.)	45/7 1033.5 54/7 1113 54/7	2.125	1	9-1/4 (234.95)	3/4 (19.05)	14-5/8 (371.43)	4.2 (1.9)
CCL1299DEHV	1.289–1.340	1250 (91 Str.) 1272 (61 Str.) 1300 (91 Str.) 1351.5 (61 Str.)	1113 1192.5 45/7 1192.5 54/19	2.375	1	9-1/4 (234.95)	3/4 (19.05)	14-5/8 (371.48)	4.2 (1.91)
CCL1382DEHV	1.345–1.385	1400 (91 Str.) 1431 (61 Str.)	45/7 1272 54/19 1351.5 45/7	2.375	1	9-1/4 (234.95)	3/4 (19.05)	14-5/8 (371.48)	3.9 (1.77)
CCL1465DEHV	1.412–1.466	1500 (91 Str.) (61 Str.) 1590 (91 Str.) 1510.5 (61 Str.) 1600 (127 Str.)	1351.5 54/19 1431 45/7 1431 54/19 1510.5 45/7	2.375	1	9-1/4 (234.95)	3/4 (19.05)	14-5/8 (371.48)	3.9 (1.77)
CCL1545DEHV	1.502–1.548	1700 (127 Str.) 1750 (127 Str.) 1800 (127 Str.)	1590 45/7 1510.5 54/19 1590 54/19	2.375	1	9-1/4 (234.95)	3/4 (19.05)	14-5/8 (371.48)	3.9 (1.77)
CCL1659DEHV	1.602–1.659	2000 (91 Str.) 2000 (127 Str.)	1780 84/19	2.937	2	9-3/4 (247.65)	1 (25.40)	15-5/8 (396.85)	6.3 (2.86)
CCL1762DEHV	1.710–1.762	–	2167 72/7 2156 84/19	2.937	2	9-3/4 (247.65)	1 (25.40)	15-5/8 (396.85)	6.6 (2.99)
CCL1824DEHV	1.763–1.824	(91 Str.) 2500 (127 Str.)	–	2.937	2	9-3/4 (247.65)	1 (25.40)	15-5/8 (396.85)	6.6 (2.99)
CCL1950DEHV	1.825–1.950	2750 (91 Str.)	–	2.937	2	9-3/4 (247.65)	1 (25.40)	15-5/8 (396.85)	6.6 (2.99)
CCL1996DEHV	1.953–1.996	3000 (127 Str.)	–	2.937	2	9-3/4 (247.65)	1 (25.40)	15-5/8 (396.85)	6.6 (2.99)
CCL2160DEHV	2.160	3500 (127 Str.)	–	2.937	2	9-1/2 (241.30)	1 (25.40)	15-5/8 (396.85)	6.6 (2.99)

SUBSTATION TERMINALS

EHV SHORT BARREL COMPRESSION TERMINALS FOR CABLE TYPE CCLS-EHV

ALUMINUM
CCLS-EHV

Aluminum compression terminal connectors are designed for corona free service at 500 KV. Single cable diameter under 1.76 inch for 345 KV and 2.50 inch diameter for 500 KV may not be corona free unless conductors are bundled. These connectors can be compressed with conventional tooling. The barrel is factory inhibited and the entire connector is sealed in a clear plastic bag. *Tongue mounting hardware and bolt shields are not part of this catalog number,* and must be ordered separately. Short barrel requires less space and allows faster installation.

Pad holes have NEMA spacing. Contact sealant is recommended.

For 15˚ angle terminals add "-15" to catalog number (example CCLS-1424-D-15)

Material: Casting – 99 aluminum alloy

For use with conventional compression Tooling, refer to chart C-13282 for tool and die information see page 86.

Add "-XY" for double contact surfaces.

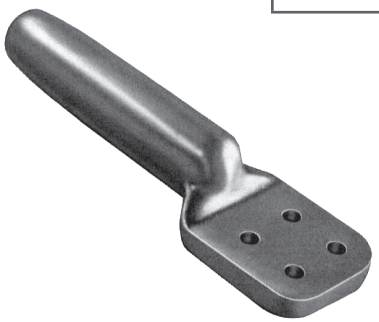

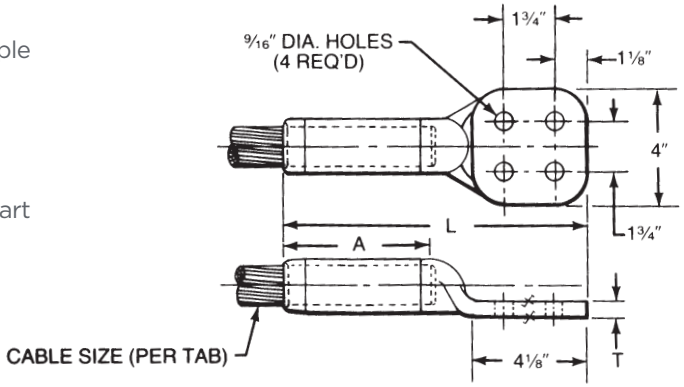

TYPE CCLS-EHV COMPRESSION TERMINALS FOR CABLE

345 kV AND 500 kV LINE-TO-LINE APPLICATIONS

CATALOG NUMBER	ALUMINUM CONDUCTOR RANGE CABLE DIA. INCHES	DIE REF.	DIMENSIONS-INCHES (MM)			WEIGHT
			A	T	L	
CCLS1081DEHV	1.026–1.081	1.625	3.88 (98.55)	1/2 (12.70)	8 (203.20)	1.3
CCLS1152DEHV	1.092–1.152	1.625	3.88 (98.55)	1/2 (12.70)	8 (203.20)	1.3
CCLS1216DEHV	1.140–1.216	1.625	3.88 (98.55)	1/2 (12.70)	8 (203.20)	1.3
CCLS1300DEHV	1.246–1.300	1.844	5-1/4 (133.35)	1/2 (12.70)	10-5/8 (269.88)	1.6
CCLS1424DEHV	1.345–1.424	2.062	5-1/4 (133.35)	1/2 (12.70)	10-5/8 (269.88)	2.0
CCLS1506DEHV	1.424–1.506	2.062	5-3/8 (136.53)	5/8 (15.88)	10-3/4 (273.05)	1.9
CCLS1545DEHV	1.506–1.545	2.062	5-3/8 (136.53)	5/8 (15.88)	10-3/4 (273.05)	1.9
CCLS1659DEHV	1.602–1.659	2.375	5-3/4 (146.05)	5/8 (15.88)	11 (279.40)	2.3
CCLS1762DEHV	1.750–1.762	2.375	5-3/4 (146.05)	5/8 (15.88)	11 (279.40)	2.2
CCLS1824DEHV	1.824	2.375	5-3/4 (146.05)	5/8 (15.88)	11 (279.40)	2.2
CCLS1996DEHV	1.996	2.625	6-3/4 (171.45)	3/4 (19.05)	12-1/8 (307.98)	2.8
CCLS2160DEHV	2.160	2.750	6-3/4 (171.45)	3/4 (19.05)	12-1/8 (307.98)	2.8

EHV TERMINALS
LONG BARREL COMPRESSION CABLE TO FLAT

ALUMINUM
ACF

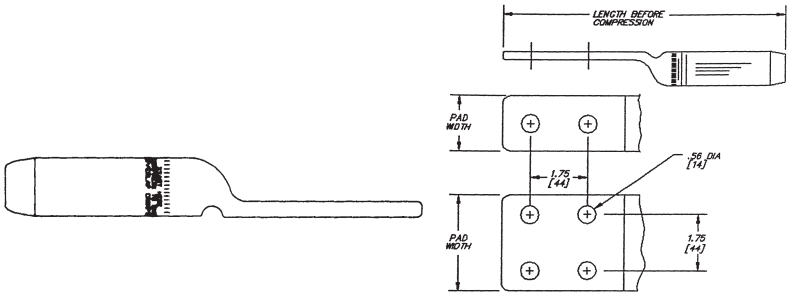

Jumper terminals are prefilled with inhibitor. Pad holes have NEMA spacing.

Material: Seamless Extruded Aluminum Tube

For use with conventional hex die tooling
Available with 15, 45 or 90 degree angled pad.

Example: ACF1196N445 for 45 deg. pad angle.

IDENTIFICATION:
- CONDUCTOR DIAMETER RANGE
- DIE SIZE, MIN PRESS SIZE
- DATE CODE, HPS
- CATALOG NO.

345 kV AND 500 kV LINE-TO-LINE APPLICATIONS

CATALOG NUMBER	AAC KCMIL	ACSR KCMIL (STR)	O.D. (IN) STD COND. (COMPACT / TW)	COMPR. DIES	MIN. PRESS (TONS)	PAD DETAILS		LENGTH BEFORE COMPR. (IN)	NET WEIGHT LB (KG)
						BOLT HOLES	WIDTH (IN)		
ACF1108N4	795–900	636 (30/19) 715.5 (24/7) (26/7) (30/19) 795 (45/7) (54/7) (26/7)	1.019 - 1.108 (0.921 - 1.010)	30AH	60	4	2.98	13.06	2.0 (.91)
		715.5 (30/19) 795 (45/7) (54/7) (26/7)	1.077 - 1.108 (0.977 - 1.108)	L727					
ACF1196N4	954–1033.5	795 (26/7) (30/19) 954 (36/1) (45/7) (54/7)	1.108 - 1.196 (1.010 - 1.084)	30AH	60	4	3.20	13.63	2.0 (.91)
	1000–1033.5	795 (30/19) 954 (45/7) (54/7)	1.140 - 1.196 (1.040 - 1.084)	L727					
ACF1263N4	1113–1200	954 (30/19) 1033.5 (45/7) (54/7) 1113 (45/7)	1.203 - 1.263 (1.092 - 1.165)	34AH L767	60	4	3.10	13.84	2.8 (1.27)
ACF1340N4	1250–1351.5	1113 (54/19) 1192.5 (45/7) (54/19)	1.289 - 1.340 (1.165 - 1.225)	34AH L767	60	4	3.33	13.97	2.7 (1.23)
ACF1386N4	1431	1192.5 (54/19) 1272 (45/7) (54/19) 1351.5 (45/7)	1.338 - 1.386 (1.225 - 1.259)	36AH L728	60	4	3.04	14.69	3.1 (1.41)
ACF1504N4	1500–1590	1351.5 (54/19) 1431 (45/7) (54/19) 1510.5 (45/7), 1590 (45/7)	1.412 - 1.504 (1.320 - 1.358)	38AH	60	4	3.51	15.19	3.5 (1.59)
ACF1545N4	1750	1510.5 (54/19) 1590 (45/7) (54/19)	1.504 - 1.545 (1.358 - 1.424)	40AH L735	60	4	3.49	16.00	4.2 (1.91)
ACF1700N4	2000	1780 (84/19), 1869 (68/7) 2034.5 (72/7), 2057 (76/19)	1.602 - 1.700 (1.445 - 1.545)	42AH	100	4	3.93	16.13	4.5 (2.04)
ACF1762N4	2250–2300	2167 (72/7) 2156 (84/19)	1.729 - 1.762 (1.545 - 1.608)	44AH	100	4	4.0	17.56	5.2 (2.36)
ACF1824N4	2500	2156 (84/19) 2312 (76/19)	1.762 - 1.824 (1.608 - 1.650)	44AH	100	4	3.93	17.94	5.2 (2.36)

NOTES:
1. *These terminals are also recommended for AAAC and ACAR conductors within the diameter ranges listed.*
2. *Terminals are pre-filled with Anderson/Fargo standard joint compound.*
   Consult factory for terminals pre-filled with high performance, conductive-grit compound type HTJC.

EHV TERMINALS
SHORT BARREL COMPRESSION CABLE TO FLAT

ALUMINUM
ACFS

Jumper terminals are prefilled with inhibitor. Pad holes have NEMA spacing.

For use with conventional hex die tooling
Available with 15, 45 or 90 degree angled pad.

Example: ACFS1196N445 for 45 deg. pad angle.

IDENTIFICATION:
- CONDUCTOR DIAMETER RANGE
- DIE SIZE, MIN PRESS SIZE
- DATE CODE, HPS
- CATALOG NO.

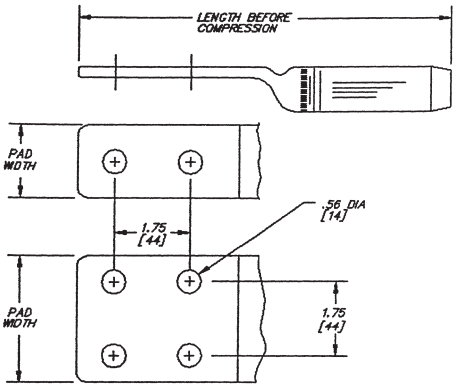

345 kV AND 500 kV LINE-TO-LINE APPLICATIONS

CATALOG NUMBER	AAC KCMIL	ACSR KCMIL (STR)	O.D. (IN) STD COND. (COMPACT / TW)	COMPR. DIES	MIN. PRESS (TONS)	PAD DETAILS		LENGTH BEFORE COMPR. (IN)	NET WEIGHT LB (KG)
						BOLT HOLES	WIDTH (IN)		
ACFS1108N4	795–900	636 (30/19) 715.5 (24/7) (26/7) (30/19) 795 (45/7) (54/7) (26/7)	1.019 - 1.108 (0.921 - 1.010)	30AH	60	4	2.98	11.25	1.7 (.77)
		715.5 (30/19) 795 (45/7) (54/7) (26/7)	1.077 - 1.108 (0.977 - 1.108)	L727					
ACFS1196N4	954–1033.5	795 (26/7) (30/19) 954 (36/1) (45/7) (54/7)	1.108 - 1.196 (1.010 - 1.084)	30AH	60	4	3.20	11.50	1.7 (.77)
	1000–1033.5	795 (30/19) 954 (45/7) (54/7)	1.140 - 1.196 (1.040 - 1.084)	L727					
ACFS1263N4	1113–1200	954 (30/19) 1033.5 (45/7) (54/7) 1113 (45/7)	1.203 - 1.263 (1.092 - 1.165)	34AH L767	60	4	3.10	11.84	2.4 (1.09)
ACFS1340N4	1250–1351.5	1113 (54/19) 1192.5 (45/7) (54/19)	1.289 - 1.340 (1.165 - 1.225)	34AH L767	60	4	3.33	12.22	2.4 (1.09)
ACFS1386N4	1431	1192.5 (54/19) 1272 (45/7) (54/19) 1351.5 (45/7)	1.338 - 1.386 (1.225 - 1.259)	36AH L728	60	4	3.04	12.81	2.7 (1.23)
ACFS1504N4	1500–1590	1351.5 (54/19) 1431 (45/7) (54/19) 1510.5 (45/7), 1590 (45/7)	1.412 - 1.504 (1.320 - 1.358)	38AH	60	4	3.51	13.19	3.0 (1.36)
ACFS1545N4	1750	1510.5 (54/19) 1590 (45/7) (54/19)	1.504 - 1.545 (1.358 - 1.424)	40AH L735	60	4	3.49	13.97	3.7 (1.68)
ACFS1700N4	2000	1780 (84/19), 1869 (68/7) 2034.5 (72/7), 2057 (76/19)	1.602 - 1.700 (1.445 - 1.545)	42AH	100	4	3.93	14.03	3.9 (1.77)
ACFS1762N4	2250–2300	2167 (72/7) 2156 (84/19)	1.729 - 1.762 (1.545 - 1.608)	44AH	100	4	4.0	15.31	4.5 (2.04)
ACFS1824N4	2500	2156 (84/19) 2312 (76/19)	1.762 - 1.824 (1.608 - 1.650)	44AH	100	4	3.93	15.44	4.5 (2.04)

NOTES:
1. *These terminals are also recommended for AAAC and ACAR conductors within the diameter ranges listed.*
2. *Terminals are pre-filled with Anderson/Fargo standard joint compound.*
   Consult factory for terminals pre-filled with high performance, conductive-grit compound type HTJC.

EHV EXTERNAL WELDED TERMINALS FOR TUBE TO FLAT PAD TYPE WSTFE-EHV

ALUMINUM

WSTFE-EHV

Aluminum alloy tube to flat terminals are designed for corona free service at 345 and 500 KV. Terminals with center-formed contact may be ordered by adding "CF" to the catalog number (example: WSTFE-40-D-CF-EHV). *The hardware shield is included as part of this catalog number.* Tongue hardware is not furnished as part of this catalog number. Hardware must be ordered separately, specifying thickness of pad to be clamped. Pad holes have NEMA spacing. Contact sealant is recommended after welding.

Material: **Castings** – 356-T6 aluminum alloy
Bolt Shield – 356-T6 aluminum alloy

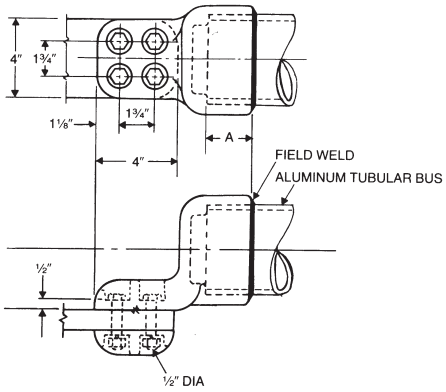

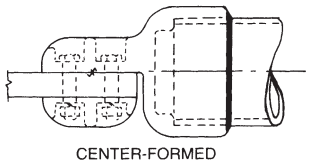

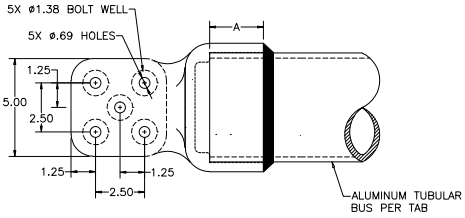

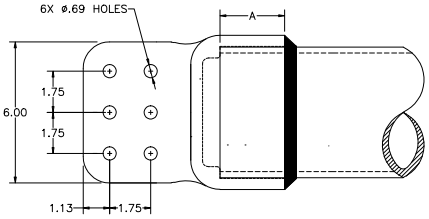

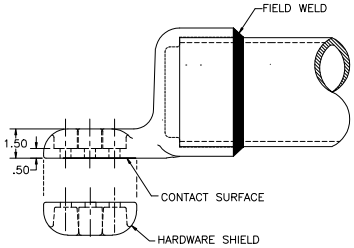

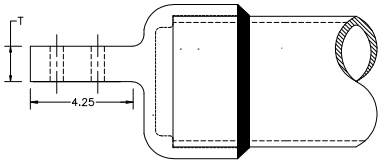

345 kV AND 500 kV LINE-TO-LINE APPLICATIONS

CATALOG NUMBER	ALUMINUM CONDUCTOR SIZE IPS/EHIPS	DIMENSIONS - INCHES (MM)		APPROX. WT. EA. LBS. (KG)
		A	T	
WSTFE30DEHV	3	1-3/4 (44.45)	–	3.9 (1.77)
WSTFE40DEHV	4	2-1/4 (57.15)	–	6.1 (2.77)
WSTFE50DEHV	5	2-3/4 (69.85)	–	7.6 (3.45)
WSTFE60DEHV	6	3-1/2 (88.90)	–	10.8 (4.90)
WSTFE34DCFEHV	3-1/2	2 (50.80)	–	5.0 (3.07)
WSTFE40NCFEHV*	4	2 (50.80)	0.88 (22.2)	8.5 (3.86)
WSTFE50NCFEHV*	5	2 (50.80)	1.0 (25.4)	11.1 (5.03)
WSTFE60NCFEHV*	6	3-1/2 (88.90)	1.0 (25.4)	13.3 (6.04)
WSTFE40KCFEHV	4	2-1/4 (57.15)	–	8.0 (3.63)
WSTFE50KCFEHV	5	2-3/4 (69.85)	–	9.6 (4.36)

** Includes 2 Hardware Shields*

EHV INTERNAL WELDED TERMINALS FOR TUBE TO CENTER-FORMED FLAT PAD TYPE WSTFX-EHV

ALUMINUM
WSTFX-EHV

Aluminum alloy, tube to flat, terminal connectors are designed for corona free service at 345 and 500 KV. Only one side of the contact tongue is machined. Casting is chamfered for proper welding fit. *This catalog number does not include tongue mounting hardware or bolt shields; these components must be ordered separately.* Specify "H" in catalog number if Schedule 80 EHIPS tubing is to be used. (example: WSTFXH-40-D-CF-EHV.) Tongue holes have NEMA spacing. Contact sealant is recommended for contact pad after welding.

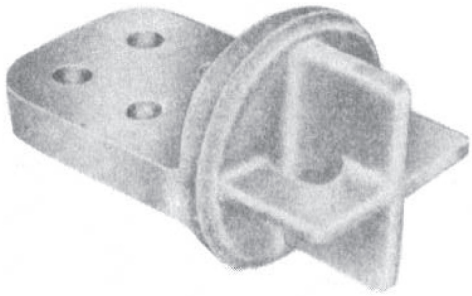

Material: Castings – 356-T6 aluminum alloy

Add suffix: "HS" for one hardware shield, and "HS2" for two hardware shields.

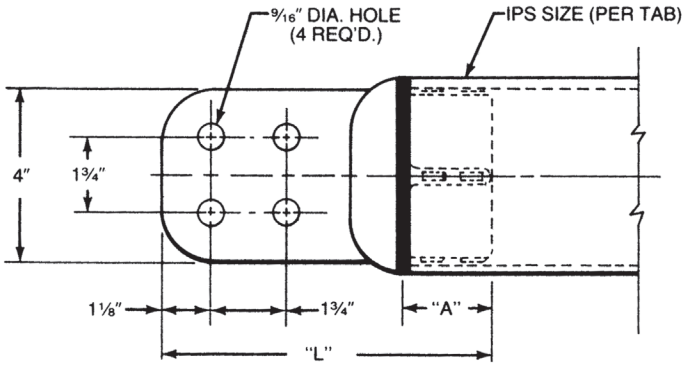

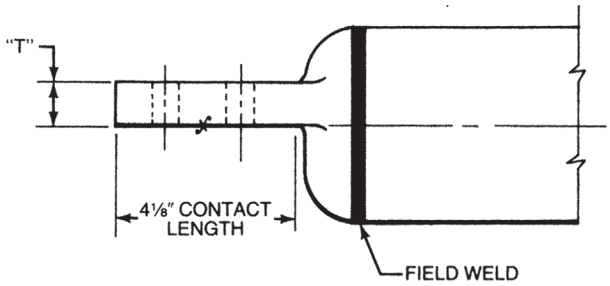

345 kV AND 500 kV LINE-TO-LINE APPLICATIONS

CATALOG NUMBER	ALUMINUM CONDUCTOR SIZE TUBING IPS	DIMENSIONS–INCHES (MM)			APPROX. WT. EA. LBS. (KG)
		A	T	L	
WSTFX24DCFEHV	2-1/2	1-1/2 (38.10)	1/2 (12.70)	7 (177.80)	1.5 (.68)
WSTFX30DCFEHV	3	1-3/4 (44.45)	5/8 (15.88)	7-1/4 (184.15)	2.2 (.99)
WSTFX34DCFEHV	3-1/2	1-3/4 (44.45)	3/4 (15.88)	7-1/4 (184.15)	2.7 (1.23)
WSTFX40DCFEHV	4	2 (50.80)	7/8 (19.05)	7-5/8 (193.68)	3.7 (1.68)
WSTFX50DCFEHV	5	2 (50.80)	1 (25.40)	7-5/8 (193.68)	4.8 (2.18)
WSTFX60DCFEHV	6	2-1/2 (63.50)	1 (25.40)	8 (203.20)	6.4 (2.91)

ALUMINUM

WSTFXH-EHV

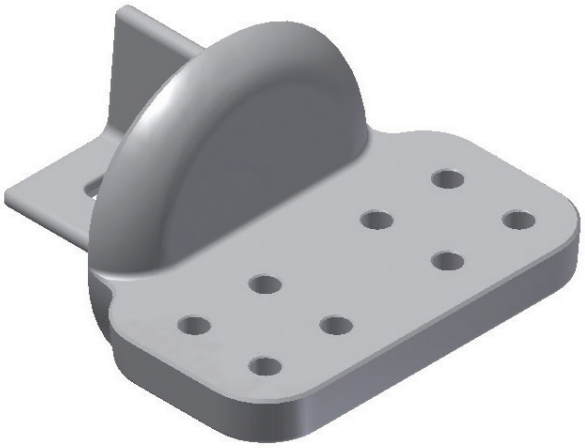

Aluminum alloy, tube-to-flat terminal, designed for corona-free EHV service, on 6 EHIPS, schedule 80 bus up to 500kV. Two bolt shields are required and included:

Material: **Castings** – 356-T6 aluminum alloy

Note: When mounting to unshielded equipment pad, two additional hardware shields (EVHSD) must be used to ensure corona-free performance.

Pad bolting hardware is not included. Bolt lengths depend on thickness of mating pad to be clamped.

Ampacity is 5,000 amps outdoors with 2 ft/sec cross wind and normal oxidized surface, when installed with type HTJC Inhibitor compound and the two EVHSD hardware shields provided.

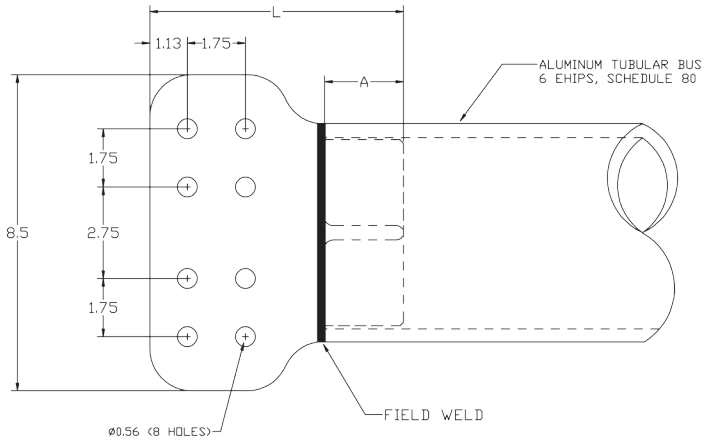

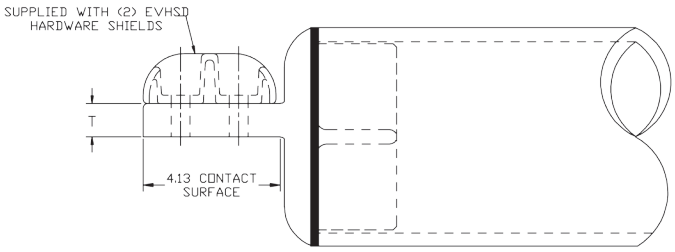

CATALOG NUMBER	ALUMINUM CONDUCTOR SIZE EHIPS	DIMENSIONS–INCHES (MM)			APPROX. WT. EA. LBS. (KG)
		A	L	T	
WSTFXH602N4CFEHV	6	2.37 (60.2)	8.0 (203)	1.0 (25.4)	7.5 (3.4)

EHV EXTERNAL WELDED TERMINALS FOR TUBE TO TWO FLAT PADS TYPE WST2F-EHV

ALUMINUM

WST2F-EHV

Aluminum alloy weldment, tube to double flat, terminal is designed for corona free service at 345 and 500 KV when bolt shields are installed. *This catalog number does not include hardware shields or mounting hardware.* Contact sealant is recommended for contact pads after welding.

Material: **Castings** – 356-T6 aluminum alloy
Pads – 6061-T6

Add suffix: "HS" for one hardware shield, and "HS2" for two hardware shields.

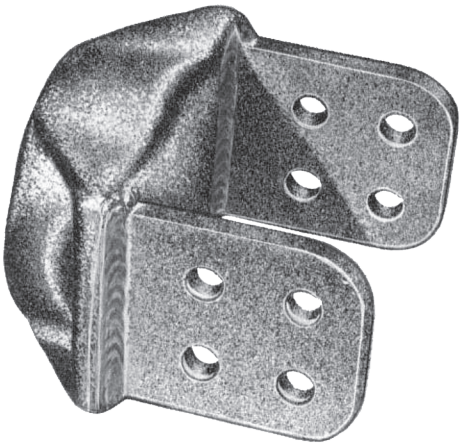

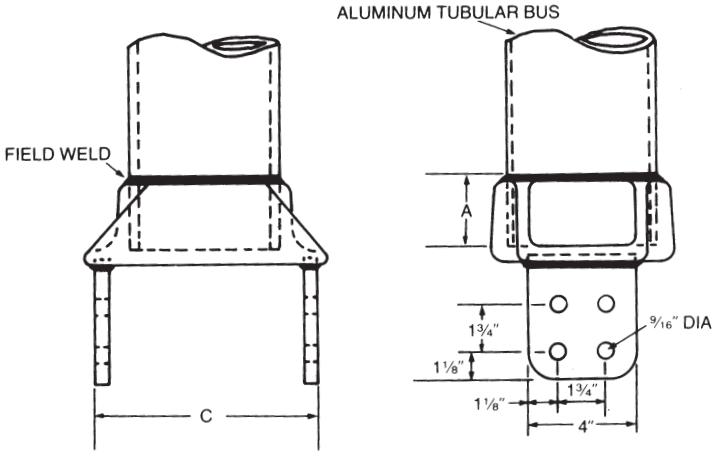

345 kV LINE-TO-LINE APPLICATIONS

CATALOG NUMBER	ALUMINUM CONDUCTOR SIZE TUBING IPS/EHIPS	DIMENSIONS–INCHES (MM)		APPROX. WT. EA. LBS. (KG)
		A	C	
WST2F24DEHV	2-1/2	1 (25.40)	6 (152.40)	2.3 (1.04)
WST2F30DEHV	3	1 (25.40)	6 (152.40)	2.9 (1.37)
WST2F34DEHV	3-1/2	1 (25.40)	6 (152.40)	3.6 (1.63)
WST2F40DEHV	4	1-1/4 (31.75)	6-7/8 (174.63)	4.9 (2.22)
WST2F50DEHV	5	1-1/4 (31.75)	9-3/8 (238.13)	5.4 (2.45)
WST2F60DEHV	6	1-1/2 (38.10)	6-3/4 (171.45)	4.6 (2.09)

EHV WELDED CABLE TERMINALS FOR CABLE TO FLAT PAD TYPE WCF-EHV

ALUMINUM
WCF-EHV

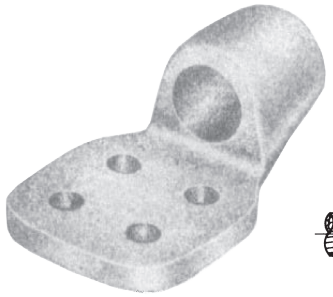

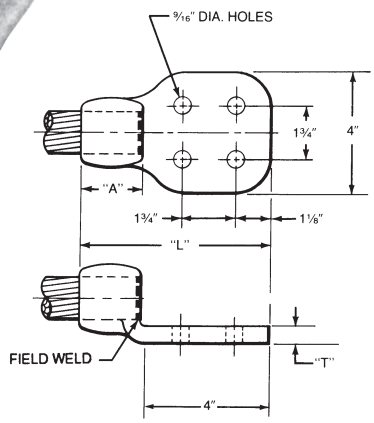

Aluminum alloy, cable to flat pad, terminal connectors are designed for corona free service at 345 KV. Tongue holes have NEMA spacing. Cable should be positioned 1/8" to 3/16" from edge inside barrel prior to puddle welding. *This catalog number does not include tongue mounting hardware or bolt shields;* these components must be ordered separately. Corona rings, terminal equipment or bolt shields must be used on both sides of pad to assure corona free performance. Contact sealant is recommended for contact pads after welding.

Material: Casting – 356-T6 aluminum alloy

Add suffix: "-HS" for one hardware shield, and "-HS2" for two hardware shields.

345 kV LINE-TO-LINE APPLICATIONS

CATALOG NUMBER	ALUMINUM CONDUCTOR RANGE					DIMENSIONS-INCHES (MM)			APPROX. WT. EA. LBS. (KG)
	DIA. IN.	AAC		ACSR		A	L	T	
WCF106DEHV	.990–1.028	750 795	(61 Str.) (37 Str.) (61 Str.)	636 666.6	30/19 24/7	1-3/4 (44.45)	6 (152.40)	1/2 (12.70)	1.1 (.48)
WCF113DEHV	1.031–1.081	800 874.5	(61 Str.) (37 Str.) (61 Str.)	715.5 795	54/7 30/19 26/7 36/1 45/7	1-3/4 (44.45)	6 (152.40)	1/2 (12.70)	1.1 (.48)
WCF117DEHV	1.093–1.125	900 954	(91 Str.) (61 Str.) (37 Str.)	795	54/7 26/7	1-3/4 (44.45)	6 (152.40)	1/2 (12.70)	1.1 (.48)
WCF123DEHV	1.140–1.172	1000 1033.5	(61 Str.) (37 Str.) (61 Str.)	795 954	30/19 54/7	1-3/4 (44.45)	6 (152.40)	1/2 (12.70)	1.1 (.48)
WCF129DEHV	1.209–1.246	1100 1113	(91 Str.) (61 Str.)	1033.5 954	45/7 54/7	2 (50.80)	6-1/4 (158.75)	9/16 (14.20)	1.4 (.64)
WCF136DEHV	1.263–1.315	1200 1300	(91 Str.) (91 Str.)	1113	54/19	2 (50.80)	6-1/4 (158.75)	9/16 (14.20)	1.4 (.64)
WCF143DEHV	1.320–1.346	1351.5	(61 Str.)	1192. 1272	54/19 45/7	2 (50.80)	6-1/4 (158.75)	9/16 (14.20)	1.6 (.73)
WCF147DEHV	1.364–1.412	1400 1500	(91 Str.) (91 Str.)	1272 1351.5	54/19 45/7	2 (50.80)	6-1/4 (158.75)	9/16 (14.20)	1.6 (.73)
WCF155DEHV	1.454–1.504	1590 1700	(61 Str.) (91 Str.) (127 Str.)	1431 1590	54/19 45/7	2-1/2 (63.50)	6-3/4 (171.45)	5/8 (15.88)	1.8 (.82)
WCF162DEHV	1.526–1.590	1750 1900	(127 Str.) (127 Str.)	1590	54/19	2-1/2 (63.50)	6-3/4 (171.45)	5/8 (15.88)	1.8 (.82)
WCF172DEHV	1.630–1.631	2000	(91 Str.)	–		2-1/2 (63.50)	6-3/4 (171.45)	5/8 (15.88)	1.8 (.82)
WCF181DEHV	1.729–1.762	–		2167 2156	72/7 84/19	3 (76.20)	7-1/4 (184.15)	3/4 (19.05)	2.7 (1.22)
WCF188DEHV	1.823–1.824	2500	(91 Str.) (127 Str.)	–		3 (76.20)	7-1/4 (184.15)	3/4 (19.05)	2.7 (1.22)

EHV WELDED CABLE TERMINALS
TWO CABLES TO FLAT PAD TYPE W2CF-EHV

ALUMINUM
W2CF-EHV

Aluminum alloy, cable to flat pad, terminal connectors are designed for corona free service at 345 KV. Tongue holes have NEMA spacing. Cable should be positioned 1/8" to 3/16" from edge inside barrel prior to puddle welding. *This catalog number does not include tongue mounting hardware or bolt shields;* these components must be ordered separately. Corona rings, terminal equipment or bolt shields must be used on both sides of pad to assure corona free performance. Contact sealant is recommended for contact pads after welding.

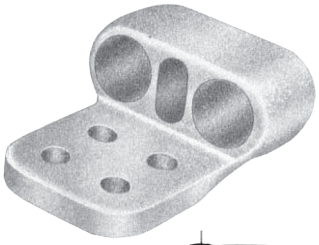

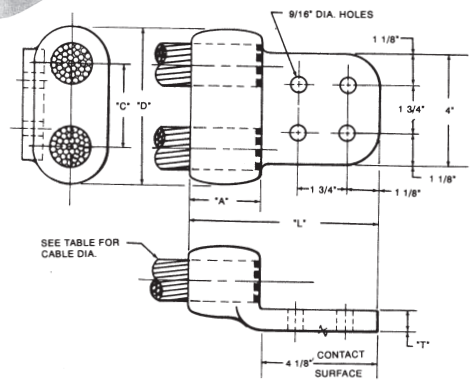

Material: **Castings** – 356-T6 aluminum alloy

Add suffix: "-HS" for one hardware shield, and "-HS2" for two hardware shields.

345 kV LINE-TO-LINE APPLICATIONS

CATALOG NUMBER	ALUMINUM CONDUCTOR RANGE					DIMENSIONS-INCHES (MM)			APPROX. WT. EA. LBS. (KG)
	DIA. IN.	AAC		ACSR		A	L	T	
W2CF106DEHV	.990–1.028	750 795	(61 Str.) (37 Str.) (61 Str.)	636 666.6	30/19 24/7	1-3/4 (44.45)	6 (152.40)	5/8(15.88)	1.1 (.77)
W2CF113DEHV	1.031–1.081	800 874.5	(61 Str.) (37 Str.) (61 Str.)	715.5 795	54/7 30/19 26/7 36/1 45/7	1-3/4 (44.45)	6 (152.40)	5/8 (15.88)	1.7 (.77)
W2CF117DEHV	1.093–1.125	900 954	(91 Str.) (61 Str.) (37 Str.)	795	54/7 26/7	1-3/4 (44.45)	6 (152.40)	5/8 (15.88)	1.7 (.77)
W2CF123DEHV	1.140–1.172	1000 1033.5	(61 Str.) (37 Str.) (61 Str.)	795 954	30/19 45/7	1-3/4 (44.45)	6 (152.40)	5/8 (15.88)	1.7 (.77)
W2CF129DEHV	1.209–1.246	1100 1113	(91 Str.) (61 Str.)	954 1033.5	54/7 45/7	2 (50.80)	6-1/4 (158.75)	11/16 (17.46)	2.7 (1.22)
W2CF136DEHV	1.263–1.315	1200 1300	(91 Str.) (91 Str.)	1113	54/19	2 (50.80)	6-1/4 (158.75)	11/16 (17.46)	2.7 (1.22)
W2CF143DEHV	1.320–1.346	1351	(61 Str.)	1192.5 1272	54/19 45/7	2 (50.80)	6-1/4 (158.75)	11/16 (17.46)	2.7 (1.22)
W2CF147DEHV	1.364–1.412	1400 1500	(91 Str.) (91 Str.)	1272 1351.5	54/19 45/7	2 (50.80)	6-1/4 (158.75)	11/16 (17.46)	2.7 (1.22)
W2CF155DEHV	1.454–1.504	1590 1700	(61 Str.) (91 Str.) (127 Str.)	1431 1590	54/19 45/7	2-1/2 (63.50)	6-3/4 (171.45)	3/4 (19.05)	3.6 (1.63)
W2CF162DEHV	1.526–1.590	1750 1900	(127 Str.) (127 Str.)	1590	54/19	2-1/2 (63.50)	6-3/4 (171.45)	3/4 (19.05)	3.6 (1.63)
W2CF172DEHV	1.630–1.631	2000	(91 Str.)	–		2-1/2 (63.50)	6-3/4 (171.45)	3/4 (19.05)	3.6 (1.63)
W2CF181DEHV	1.729–1.762	–		2167 2156	72/7 84/19	3 (76.20)	7-1/4 (184.15)	1 (25.4)	5.7 (2.58)
W2CF188DEHV	1.823–1.824	2500	(91 Str.) (127Str.)	–		3 (76.20)	7-1/4 (184.15)	1 (25.4)	5.7 (2.58)

EHV WELDED EXPANSION TERMINALS FOR TUBE TO FLAT PAD TYPE HVRTE

ALUMINUM
HVRTE

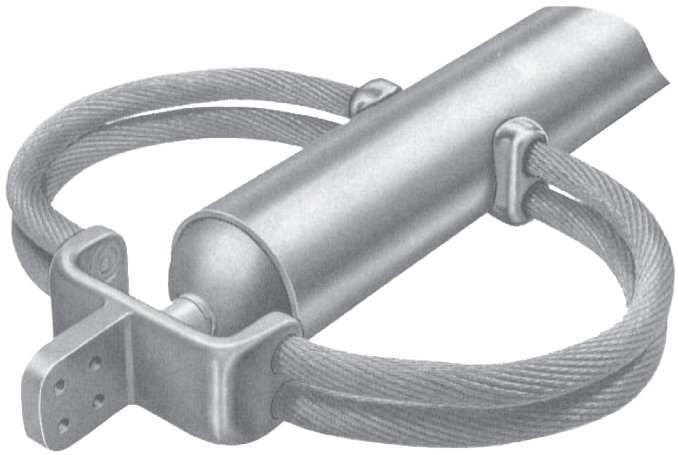

Aluminum alloy weldment, expansion terminal, is designed for corona free service at 345KV. This design provides 32 inch expansion. The cables serves as the expansion part of the fitting as well as the corona rings. *This catalog number does not include tongue mounting hardware or bolt shields;* these components must be ordered separately. Specify "H" in catalog number if Schedule 80 EHIPS tubing is to be used; example: HVRTEH-40-D.

Material: **Castings** – 356-T6 aluminum alloy
Cables – aluminum alloy

Refer to installation chart DC-11853 on page 87 for instructions.

Add suffix: "-HS" for one hardware shield, and "-HS2" for two hardware shields.

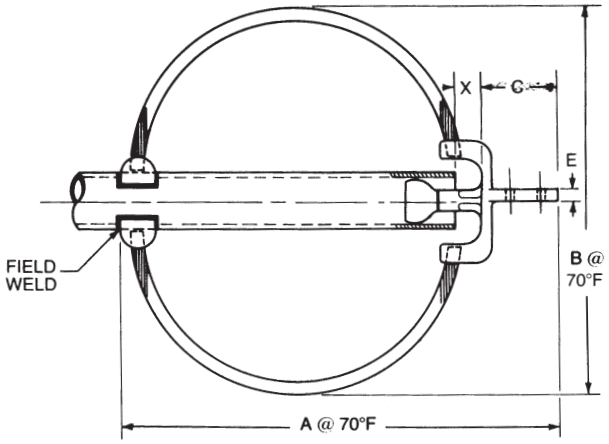

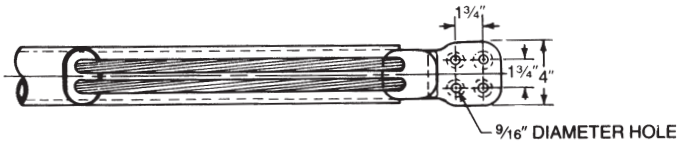

345 kV LINE-TO-LINE APPLICATIONS

CATALOG NUMBER	ALUMINUM CONDUCTOR SIZE IPS	DIMENSIONS–INCHES (MM)				APPROX. WT. EA. LBS. (KG)
		A	B	C	E	
HVRTE24D	2-1/2	27-1/16 (687.39)	25-3/4 (654.05)	4-7/8 (123.83)	3/4 (19.05)	11.6 (5.10)
HVRTE30D	3	27-1/16 (687.39)	25-3/4 (654.05)	4-7/8 (123.83)	3/4 (19.05)	11.8 (5.35)
HVRTE34D	3-1/2	27-1/16 (687.39)	25-3/4 (654.05)	4-7/8 (123.83)	3/4 (19.05)	11.9 (5.36)
HVRTE40D	4	27-1/16 (687.39)	25-3/4 (654.05)	4-7/8 (123.83)	3/4 (19.05)	12.0 (5.44)
HVRTE50D	5	28 (711.20)	28-3/4 (730.25)	5-1/8 (130.18)	1 (25.40)	12.3 (5.58)
HVRTE60D	6	28 (711.20)	28-3/4 (730.25)	5-1/8 (130.18)	1 (25.40)	12.5 (5.67)

EHV WELDED EXPANSION TERMINALS FOR TUBE TO FLAT PAD TYPE EVKET

ALUMINUM
EVKET

Aluminum alloy, tube to flat, compact expansion terminals are designed for corona free service at 500 KV. This design provides 32 inch expansion. *This catalog number does not include tongue mounting hardware or bolt shields;* these components must be ordered separately. Contact sealant is recommended for pads after welding. Specify "H" in catalog number if Schedule 80 EHIPS tubing is to be used; example: EVKETH-40-D.

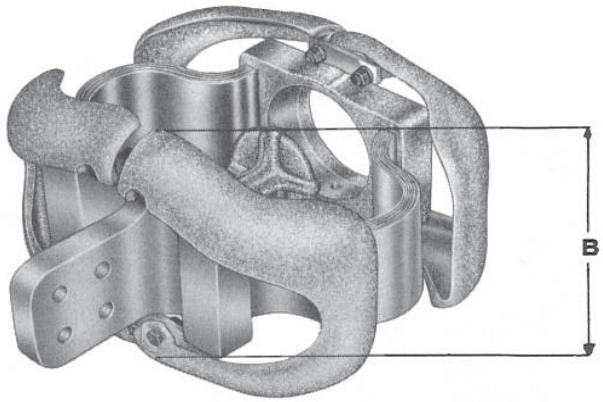

Material: **Castings** – 356-T6 aluminum alloy
Shunts – 1100-D aluminum alloy
Shield Mounting Hardware – stainless steel

Note: To obtain pad rotated 90˚, add "V" to catalog number; (example EVKETV-40-D).

Refer to installation chart DC-9295 on page 86 for instructions.

Add suffix: "-HS" for one hardware shield, and "-HS2" for two hardware shields.

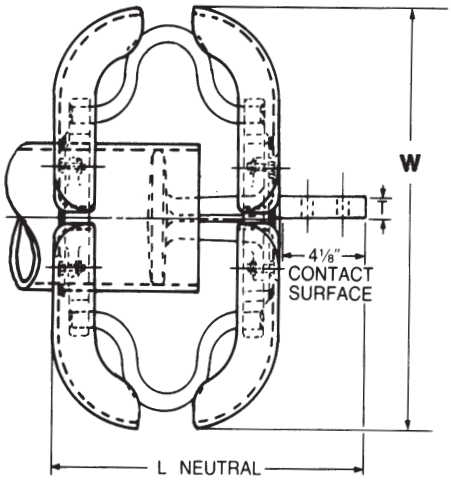

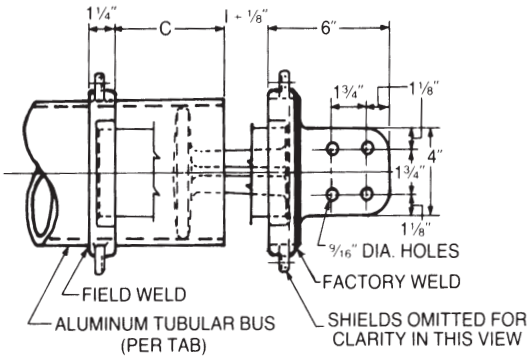

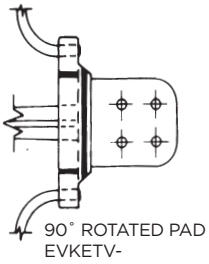

345 kV AND 500 kV LINE-TO-LINE APPLICATIONS

CATALOG NUMBER	ALUMINUM ♦♦ CONDUCTOR SIZE IPS	DIMENSIONS–INCHES (MM)					APPROX. WT. EA. LBS. (KG)
		L	W	C	T	B *	
EVKET34D	3-1/2	14-3/4 (374.65)	18 (457.20)	4-3/4 (120.65)	3/4 (19.05)	10-1/16	18.3 (8.30)
EVKET40D	4	15 (381.00)	18 (457.20)	5 (127.00)	7/8 (22.23)	10-1/16	19.9 (9.03)
EVKET50D	5	15-1/4 (387.35)	21-1/2 (546.10)	5-1/4 (133.35)	1 (25.40)	11-3/4	24.3 (11.02)
EVKET60D	6	15-1/2 (393.70)	21-1/2 (546.10)	5-1/2 (139.70)	1 (25.40)	11-3/4	27.6 (12.52)

♦♦ 140 ft. maximum total bus length.
** Height of Corona Shield*

ALUMINUM
EVKETVH

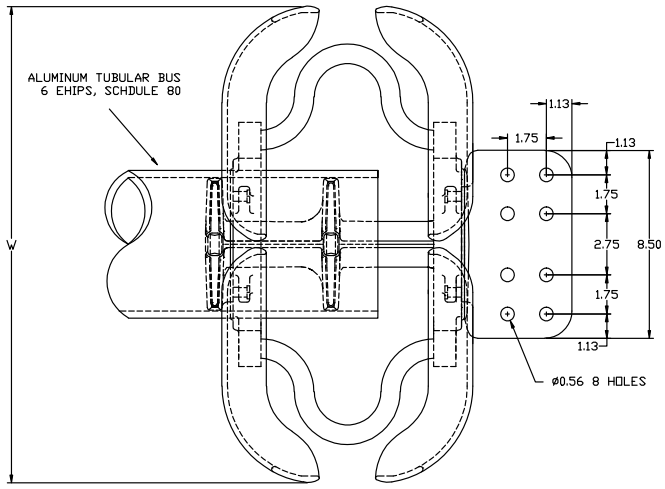

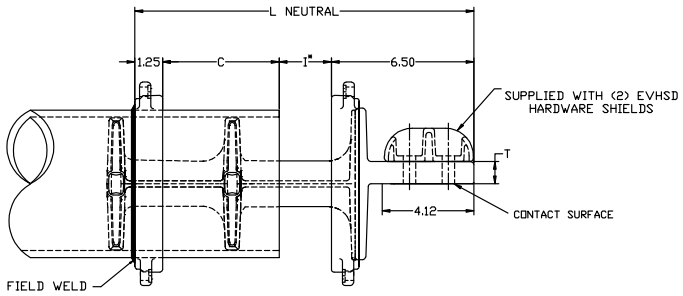

SHUNT STRAPS & SHIELDS NOT SHOWN IN THIS VIEW

*SEE INSTALLATION CHRT DC-9295 ON PAGE 86 'I' DIMENSION

Aluminum alloy, tube-to-flat, compact expansion terminal designed for corona-free EHV service, on 6 EHIPS, schedule 80 bus up to 500kV. Two bolt shields are required and included.

This design provides 32 inch expansion.

Material: **Castings** – 356-T6 aluminum alloy
Shunts – 1100D aluminum alloy
Shield Mounting Hardware – Stainless Steel

Note: When mounting to unshielded equipment pad, two additional hardware shields (EVHSD) must be used to ensure corona-free performance.

Pad bolting hardware is not included. Bolt lengths depend on thickness of mating pad to be clamped.

Maximum bus length is 90 feet.

Ampacity: 5,000A outdoors with 2 ft/sec cross wind and normal oxidized surface, when installed with type HTJC Inhibitor compound and the two EVHSD hardware shields provided.

345 kV AND 500 kV LINE-TO-LINE APPLICATIONS

CATALOG NUMBER	ALUMINUM CONDUCTOR SIZE EHIPS	DIMENSIONS - INCHES (MM)					APPROX. WT. EA. LBS. (KG)
		L	W	C	T	SHIELD HEIGHT	
EVKETVH602N4	6	16.0 (406)	21.5 (546)	5.50 (140)	1.0 (25.4)	11.75 (298)	33.0 (15.0)

EHV WELDED EXPANSION TERMINALS FOR TUBE TO FLAT PAD TYPE HVETF/EVETF

ALUMINUM
HVETF/EVETF

Aluminum alloy, tube to flat, expansion terminals are designed for corona free service at 345 and 500 KV respectively. This design provides 32 inch expansion. Terminals with side formed contact may be ordered by adding "SF" to the catalog number (example: HVETF-40-D-SF). For additional equipment clearance, a pad extension may be ordered by adding "E" in the catalog number (example: HVETFE-40-D). When pad extension is specified, one hardware shield and hardware is furnished. Specify "H" in catalog number if schedule 80 EHIPS tubing is to be used; example: HVETFH-40-D. Pad mounting hardware is not furnished as part of this catalog number and must be ordered separately, specifying thickness of pad to be clamped.

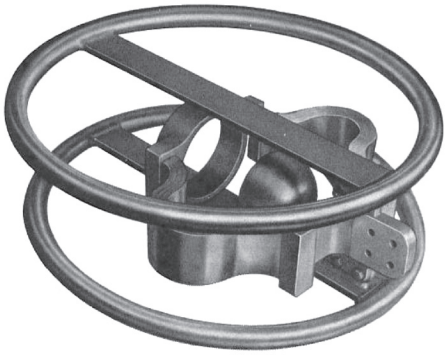

Material:
- **Castings** – 356-T6 aluminum alloy
- **Rings** – 6061-T6 aluminum alloy
- **Ring Brackets** – 6061-T6 aluminum alloy
- **Shunts** – 1100-0 aluminum alloy
- **Guide Mounting Hardware** – galvanized steel
- **Ring Mounting Hardware** – aluminum alloy

Refer to for installation chart DC-6750 on page EHV 87 for instructions.

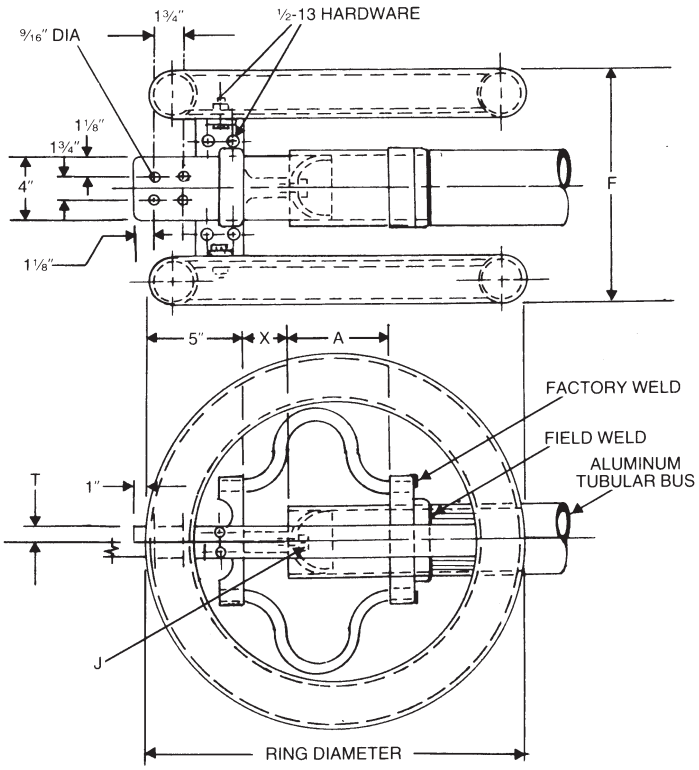

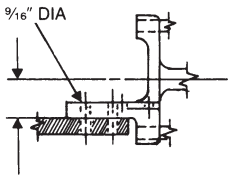

SIDE FORMED DETAIL

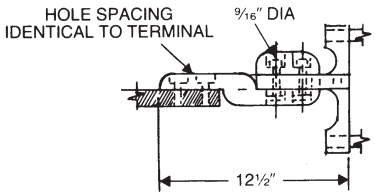

EXTENSION DETAIL

345 kV AND 500 kV LINE-TO-LINE APPLICATIONS

CATALOG NUMBER	ALUMINUM CONDUCTOR SIZE IPS	RING DIAMETER	DIMENSIONS–INCHES (MM)				APPROX. WT. EA. LBS. (KG)
			A	T	F	J	
HVETF20D	2	24 (609.60)	6-3/4 (171.45)	1/2 (12.70)	11-1/4 (285.75)	1/2 (12.70)	18.2 (8.26)
HVETF24D	2-1/2	24 (609.60)	6-1/4 (158.75)	1/2 (12.70)	11-1/4 (285.75)	1/2 (12.70)	19.6 (8.89)
HVETF30D	3	24 (609.60)	6-3/4 (171.45)	5/8 (15.88)	11-1/4 (285.75)	1/2 (12.70)	22.9 (10.39)

Continued on next page

TYPES HVETF/EVETF WELDED EXPANSION TERMINALS FOR TUBE TO FLAT 345 KV AND 500 KV LINE-TO-LINE APPLICATIONS (CONTINUED)

345 kV AND 500 kV LINE-TO-LINE APPLICATIONS

CATALOG NUMBER	ALUMINUM CONDUCTOR SIZE IPS	RING DIAMETER	DIMENSIONS–INCHES (MM)				APPROX. WT. EA. LBS. (KG)
			A	T	F	J	
345 KV APPLICATIONS (CONTINUED)							
HVETF34D	3-1/2	24 (609.60)	7 (177.80)	1 (25.40)	11-1/4 (285.75)	1/2 (12.70)	31.7 (14.38)
HVETF40D	4	24 (609.60)	7-1/4 (184.15)	1 (25.40)	11-5/8 (295.28)	1/2 (12.70)	28.2 (12.79)
HVETF50D	5	30 (762.00)	7-3/4 (196.85)	1 (25.40)	11-5/8 (295.28)	5/8 (15.88)	37.2 (16.87)
HVETF60D	6	30 (762.00)	8 (203.20)	1 (25.40)	12 (304.80)	5/8 (15.88)	41.9 (19.01)
500 KV APPLICATIONS							
EVETF30D	3	24 (609.60)	6-3/4 (171.45)	5/8 (15.88)	12-3/4 (323.85)	1/2 (12.70)	29.4 (13.34)
EVETF34D	3-1/2	24 (609.60)	7 (177.80)	1 (25.40)	12-3/4 (323.85)	1/2 (12.70)	38.2 (17.33)
EVETF40D	4	24 (609.60)	7-1/4 (184.15)	1 (25.40)	13-1/8 (333.38)	1/2 (12.70)	34.7 (15.74)
EVETF50D	5	30 (762.00)	7-1/4 (196.85)	1 (25.40)	13-1/8 (333.38)	5/8 (15.88)	40.7 (18.46)
EVETF60D	6	30 (762.00)	8 (203.20)	1 (25.40)	13-1/2 (342.90)	5/8 (15.88)	45.4 (20.59)

EHV BIFURCATING TERMINALS
ONE FLAT PAD TO TWO FLAT PADS TYPE EVT2F-D

ALUMINUM
EVT2F-D

Aluminum alloy, bifurcating terminals are designed for two terminations to a single flat pad. The connectors are corona free at 500 KV. When mounted on unshielded equipment tongue, bolt shield (catalog number EVHS-D) must be used to assure corona free performance. Mounting hardware should not project above recess. *Bolt shields are not included as part of this catalog number.* Connector will be corona free only if tap connectors are attached. Maximum terminal pad thickness is one inch. Contact sealant is recommended. Add "-90" for tap pads in horizontal plane.

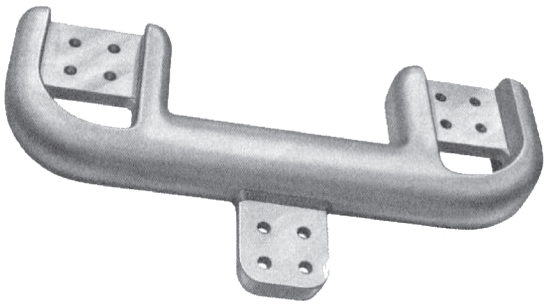

Material: **Castings** – 356-T6 aluminum alloy

Note: Contact factory to obtain center pad at special angles.

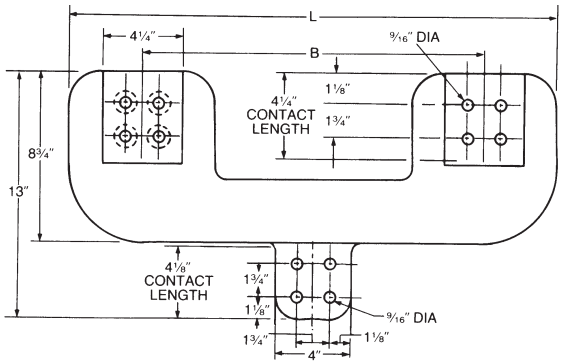

500 kV LINE-TO-LINE APPLICATIONS

CATALOG NUMBER	DIMENSIONS–INCHES (MM)		APPROX WT EA LBS (KG)
	B	L	
EVT2FD12	12 (304.80)	19-1/8 (485.78)	23.1 (10.49)
EVT2FD18	18 (457.20)	25-1/8 (638.18)	24.2 (10.99)

EHV TRIFURCATING TERMINAL
ONE FLAT PAD TO THREE FLAT PADS TYPE EVT3F-D

ALUMINUM
EVT3F-D

Aluminum alloy terminal is designed for corona free service at 500 KV. *Hardware and terminals are not included and must be ordered separately.* Maximum terminal pad thickness is one inch. *This catalog number does not include tongue mounting hardware or bolt shields;* these components must be ordered separately. Contact sealant is recommended. Bolt shields not required on recessed pad connections.

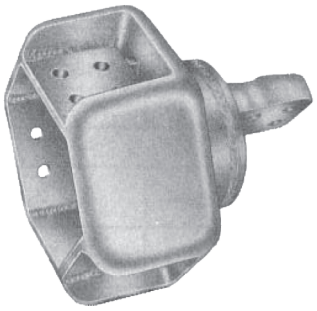

Material: **Castings** – 356-T6 aluminum alloy
Weight – 25.5 (11.58 kg)

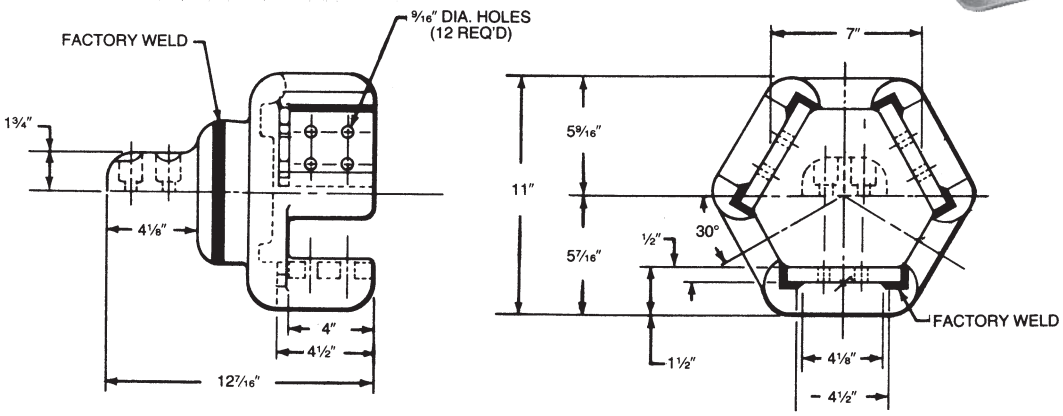

EHV BOLTED COUPLERS FOR TUBE TYPE HVSTT/EVSTT

ALUMINUM
HVSTT/EVSTT

Aluminum alloy, tube to tube, couplers are designed for corona free service at 345 and 500 KV respectively. Contact sealant is recommended.

Material: **Castings** – 356-T6 aluminum alloy
Hardware – aluminum alloy

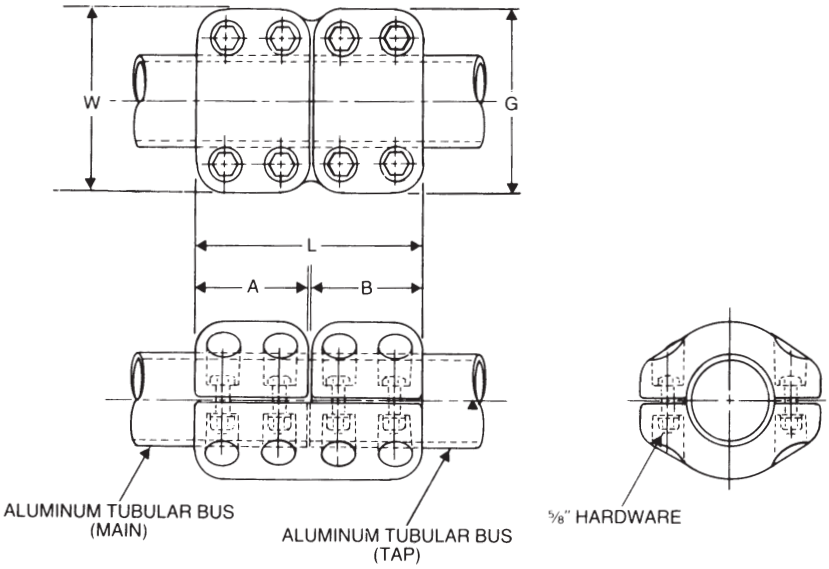

345 kV AND 500 kV LINE-TO-LINE APPLICATIONS

CATALOG NUMBER	CONDUCTOR SIZE TUBING IPS/EHIPS		DIMENSIONS-INCHES (MM)					APPROX. WT. EA. LBS. (KG)
	MAIN	TAP	A	L	B	W	G	
345 KV APPLICATIONS								
HVSTT2424	2-1/2	2-1/2	4 (101.60)	8-1/8 (206.38)	4 (101.60)	6-1/2 (165.10)	6-1/2 (165.10)	9.1 (4.13)
HVSTT3030	3	3	4 (101.60)	8-1/8 (206.38)	4 (101.60)	7-3/16 (182.56)	7-3/16 (182.56)	–
HVSTT3434	3-1/2	3-1/2	4-1/4 (107.95)	8-5/8 (219.08)	4-1/4 (107.95)	7-7/8 (200.03)	7-7/8 (200.03)	13.9 (6.31)
HVSTT4040	4	4	4-1/4 (107.95)	8-5/8 (219.08)	4-1/4 (107.95)	8-3/8 (212.73)	8-3/8 (212.73)	16.3 (7.39)
†HVSTT5050	5	5	6 (152.40)	12-1/8 (307.98)	6 (152.40)	9-5/16 (236.54)	9-5/16 (236.54)	28.1 (12.75)
†HVSTT6060	6	6	6 (152.40)	12-1/8 (307.98)	6 (152.40)	10-3/8 (263.53)	10-3/8 (263.53)	32.0 (14.52)

Continued on next page.

EHV BOLTED COUPLERS FOR TUBE TYPE HVSTT/EVSTT (CONTINUED)

345 kV AND 500 kV LINE-TO-LINE APPLICATIONS

CATALOG NUMBER	CONDUCTOR SIZE TUBING IPS/EHIPS		DIMENSIONS-INCHES (MM)					APPROX. WT. EA. LBS. (KG)
	MAIN	TAP	A	L	B	W	G	
500 KV APPLICATIONS								
EVSTT3030	3	3	5 (127.00)	10-1/8 (257.18)	5 (127.00)	7-7/8 (200.03)	7-7/8 (200.03)	20.4 (9.25)
EVSTT3434	3-1/2	3-1/2	5 (127.00)	10-1/8 (257.18)	5 (127.00)	8 (203.20)	8 (203.20)	17.7 (8.03)
EVSTT4040	4	4	5 (127.00)	10-1/8 (257.18)	5 (127.00)	8-7/8 (225.43)	8-7/8 (225.43)	23.6 (10.70)
†EVSTT5030	5	3	6 (152.40)	11-1/8 (282.58)	5 (127.00)	10 (254.00)	7-7/8 (200.03)	27.4 (12.43)
†EVSTT5040	5	4	6 (152.40)	11-1/8 (282.58)	5 (127.00)	10 (254.00)	8-7/8 (225.43)	28.8 (13.06)
†EVSTT5050	5	5	6 (152.40)	12-1/8 (307.98)	6 (152.40)	10 (254.00)	10 (254.00)	33.4 (15.15)
†EVSTT6030	6	3	6 (152.40)	11-1/8 (282.58)	5 (127.00)	11 (279.40)	7-7/8 (200.03)	29.9 (13.56)
†EVSTT6040	6	4	6 (152.40)	11-1/8 (282.58)	5 (127.00)	11 (279.40)	8-7/8 (225.43)	31.5 (14.79)
†EVSTT6060	6	6	6 (152.40)	12-1/8 (307.98)	6 (152.40)	11 (279.40)	11 (279.40)	36.7 (16.66)

†Furnished with 6 clamping bolts for 5" and 6" IPS tubing.

EHV WELDED ANGLE COUPLERS FOR TUBE TYPE WLI-45-EHV/WLI-90-EHV

ALUMINUM
WLI-45-EHV/ WLI-90-EHV

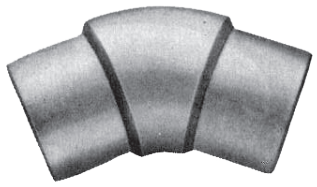

WLI-45

WLI-90

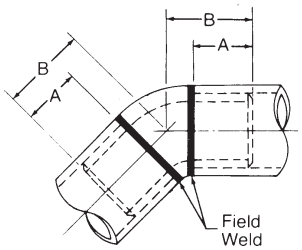

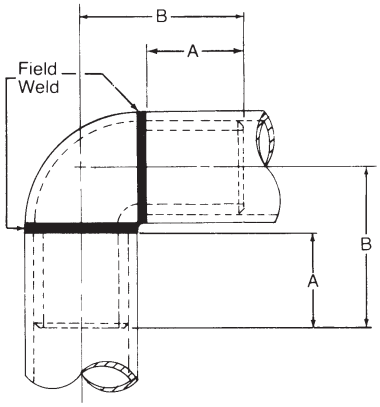

Aluminum alloy, tube to tube, couplers are designed for corona free service at 500 KV. This is an internal fitting connector with sufficient chamfer adjacent to tube ends for proper welding. The fitting is of sufficient strength to give adequate support to the tubing. The smooth contoured surface of this connector is free of nicks and burrs, which make it suitable for high voltage corona free application. To specify for extra heavy schedule 80 EHIPS tubing, add "H" to catalog number; example: WLIH-45-3030-EHV.

Material: **Castings** - 356-T6 aluminum alloy

345 kV AND 500 kV LINE-TO-LINE APPLICATIONS

CATALOG NUMBER	ALUMINUM CONDUCTOR SIZE		DIMENSIONS–INCHES (MM)		APPROX. WT. EA. LBS. (KG)
	TUBING MAIN IPS	TUBING TAP IPS	A	B	
45°					
WLI452020EHV	2	2	2 (50.80)	3-1/4 (82.55)	1.5 (.68)
WLI452424EHV	2-1/2	2-1/2	2 (50.80)	3-5/16 (84.14)	1.4 (.64)
WLI453030EHV	3	3	1-3/4 (44.45)	3-3/8 (85.73)	2.2 (1.98)
WLI453434EHV	3-1/2	3-1/2	1-3/4 (44.45)	3-1/2 (88.90)	2.9 (1.32)
WLI454040EHV	4	4	2 (50.80)	3-3/4 (95.25)	3.5 (1.59)
WLI455050EHV	5	5	2 (50.80)	4-1/8 (104.78)	5.1 (2.31)
WLI456060EHV	6	6	2-1/2 (63.50)	4-7/8 (123.83)	8.0 (3.63)
90°					
WLI902020EHV	2	2	2 (50.80)	3-3/8 (85.73)	1.4 (.64)
WLI902424EHV	2-1/2	2-1/2	1-1/2 (38.10)	4-3/16 (106.36)	1.8 (.82)
WLI903030EHV	3	3	1-3/4 (44.45)	4-3/4 (120.65)	2.9 (1.32)
WLI903434EHV	3-1/2	3-1/2	1-3/4 (44.45)	5-1/4 (133.35)	3.9 (1.77)
WLI904040EHV	4	4	2 (50.80)	6 (152.40)	5.1 (2.31)
WLI905050EHV	5	5	2 (50.80)	6-9/16 (166.69)	7.8 (3.54)
WLI906060EHV	6	6	2-1/2 (63.50)	7-11/16 (195.26)	11.6 (5.26)

EHV WELDED COUPLERS FOR TUBE TYPE WCI

ALUMINUM
WCI

Aluminum alloy weldment couplers are designed for corona free service at 345, 500, and 765 KV levels. Slot provides for close fit regardless of tubing tolerance. The joint can be stiffened, if desired, by drilling four holes in the tubing at 90˚ lateral points and plug welding the tubing to the coupler. When joining two different bus sizes, add "EHV" suffix to catalog number (example: WCI-4040-EHV, for coupling a 4" IPS to a 4" IPS).

Material: **Castings** - 356-T6 aluminum alloy

Note: To specify coupler for extra heavy (Schedule 80, EHIPS) tubing add "H" to catalog number; example: WCIH-3030.

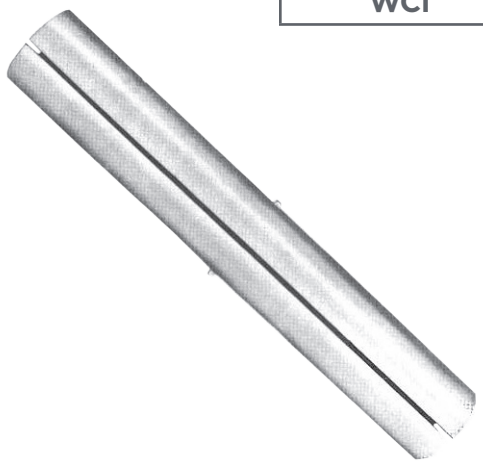

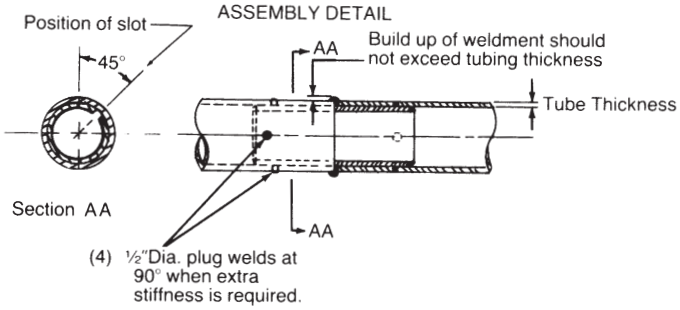

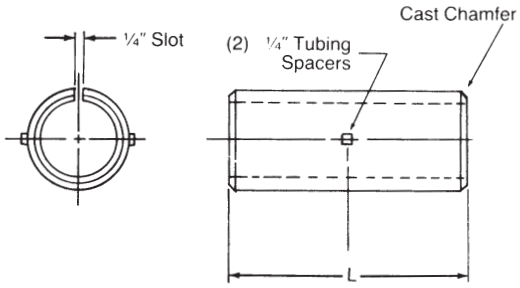

345 kV AND 500 kV LINE-TO-LINE APPLICATIONS

CATALOG NUMBER	ALUMINUM CONDUCTOR SIZE IPS	DIMENSIONS INCHES (MM) L	APPROX. WT. EA.
WCI2020	2	12 (304.80)	1.5 (.68)
WCI2424	2-1/2	15 (381.00)	2.3 (1.04)
WCI3030	3	18 (457.20)	3.5 (1.59)
WCI3434	3-1/2	18 (457.20)	5.4 (2.45)
WCI4040	4	24 (609.60)	7.1 (3.22)
WCI5050	5	24 (609.60)	9.7 (4.40)
WCI6060	6	24 (609.60)	12.7 (5.76)
WCI8OD1/4	8 O.D. 1/4" Thick wall	24 (609.60)	14.6 (6.63)
WCI8OD1/2	8 O.D. 1/2" Thick wall	24 (609.60)	14.6 (6.63)

Contact factory for sizes not shown.

ALUMINUM
EVWETTR

Aluminum alloy, tube-to-tube coupler, designed for corona-free EHV service up to 500kV. Coupling is mechanically reinforced via an internal slotted coupler/guide tube. This design provides 32 inch expansion.

Material: **Castings** – 356-T6 aluminum alloy
Shunts – 1100 aluminum alloy
Mounting Hardware – Galvanized Steel

Note: For EHIPS, schedule 80 bus tube design, add "H" to catalog number. Example: EVWETTRH50.

Maximum bus run 90 ft.

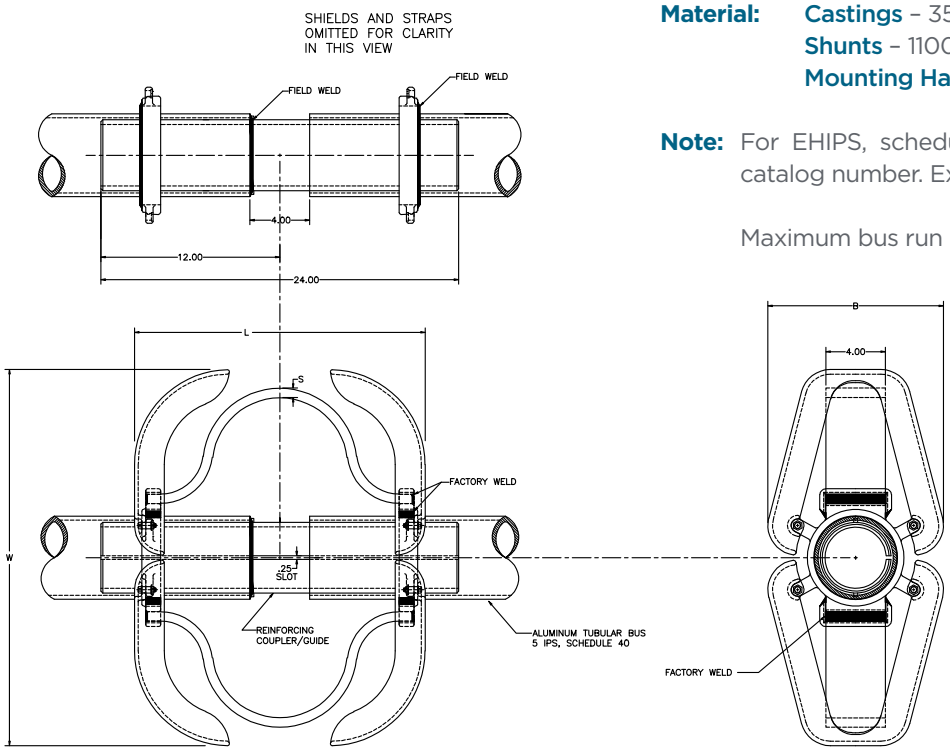

345 kV AND 500 kV LINE-TO-LINE APPLICATIONS

CATALOG NUMBER	ALUMINUM CONDUCTOR SIZE IPS	DIMENSIONS - INCHES (MM)				APPROX. WT. EA. LBS. (KG)
		L	W	B	S	
EVWETTR50	5	19.5 (495)	23.5 (596)	11.75 (298)	0.81 (20.6)	40.5 (17.6)

EHV WELDED TRIFURCATING COUPLERS FOR TUBE TO THREE FLAT PADS TYPE EVST3F

ALUMINUM
EVST3F

Aluminum alloy, tube to flat, trifurcating couplers are designed for corona free service at 500 KV. They are designed to be used with Type CCL-EHV compression terminal lugs with maximum terminal pad thickness of one inch. Contact sealant is recommended for contact pads after welding.

Material: **Castings** - 356-T6 aluminum alloy

Bolt shields not required on recessed pad connections.

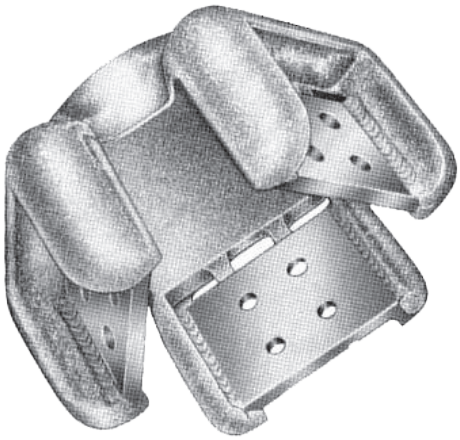

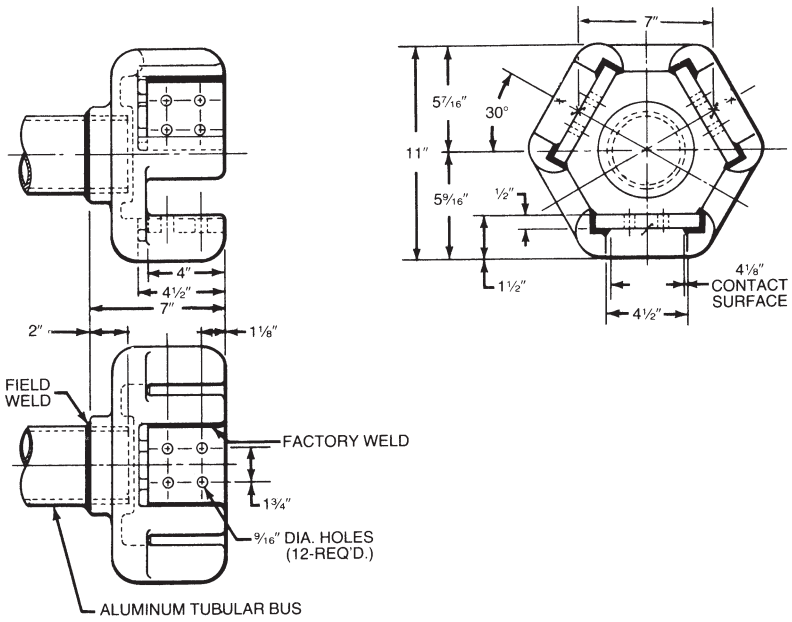

345 kV AND 500 kV LINE-TO-LINE APPLICATIONS

CATALOG NUMBER	ALUMINUM CONDUCTOR SIZE IPS/EHIPS	APPROX. WT. EA. LBS. (KG)
EVST3F30	3	16.3 (7.39)
EVST3F34	3-1/2	16.4 (7.45)
EVST3F40	4	16.5 (7.48)
EVST3F50	5	16.7 (7.58)
EVST3F60	6	16.9 (7.67)

EHV WELDED BIFURCATING COUPLERS FOR TUBE TO 2 FLAT PADS TYPE EVST2F

ALUMINUM
EVST2F

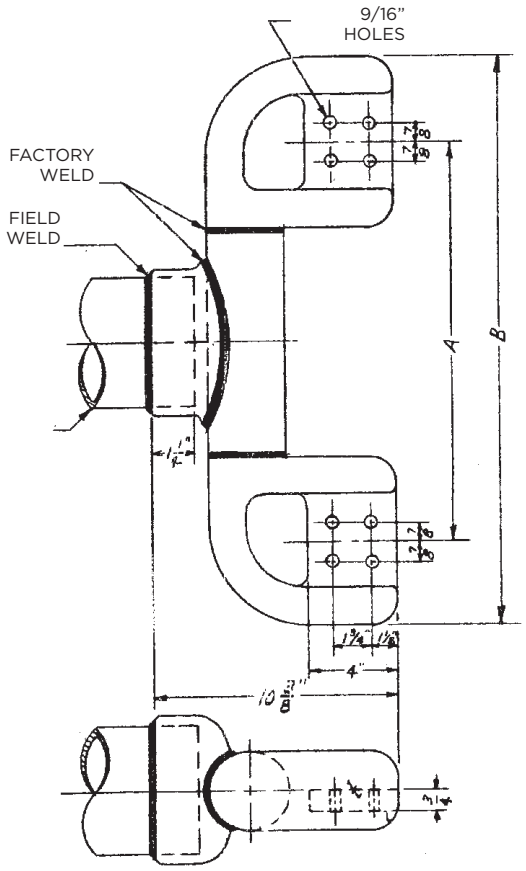

Aluminum alloy, tube to flat, bifurcating couplers are designed for corona free service at 500 KV. They are designed to be used with Type CCL-EHV compression terminal lugs with maximum terminal pad thickness of one inch. Contact sealant is recommended for contact pads after welding.

Material: **Castings** - 356-T6 aluminum alloy
Cross Brace - 6061-T6 aluminum alloy

Note: To obtain tongues finished on both sides, add "XY" to catalog number (Example: EVST2F-50-18-XY)

Connector will be corona free only if tap connectors are attached. Bolt shields not included as part of these catalog numbers.

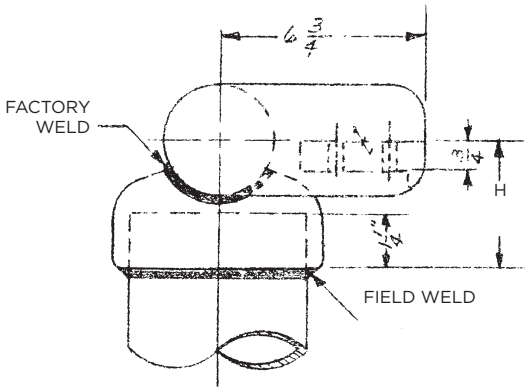

345 kV AND 500 kV LINE-TO-LINE APPLICATIONS

CATALOG NUMBER	A	B	H	TUBE	APPROX. WT. EA. LBS. (KG)
EVST2F4012	12 (304.8)	19-1/8 (484.2)	–	4"	20.9 (9.49)
EVST2F4018	18 (457.2)	25-1/8 (636.6)	–	4"	21.5 (9.76)
EVST2F5012	12 (304.8)	19-1/8 (484.2)	–	5"	19.7 (8.94)
EVST2F5018	18 (457.2)	25-1/8 (636.6)	–	5"	22.1 (10.03)
EVST2F409012	12 (304.8)	19-1/8 (484.2)	3-5/8 (90.5)	4"	20.9 (9.49)
EVST2F409018	18 (457.2)	25-1/8 (636.6)	3-5/8 (90.5)	4"	21.5 (9.76
EVST2F509012	12 (304.8)	19-1/8 (484.2)	4-1/4 (107.9)	5"	19.7 (8.94)
EVST2F509018	18 (457.2)	25-1/8 (636.6)	4-1/4 (107.9)	5"	22.1 (10.03)

EHV BOLTED TEE CONNECTORS TUBING MAIN TO TUBING TAP TYPE HVTTT/EVTTT

ALUMINUM
HVTTT/EVTTT

Aluminum alloy, tube to tube, tee connectors are designed for corona free service at 345 and 500 KV respectively. Contact sealant is recommended.

Material: **Castings** - 356-T6 aluminum alloy
Hardware - aluminum alloy

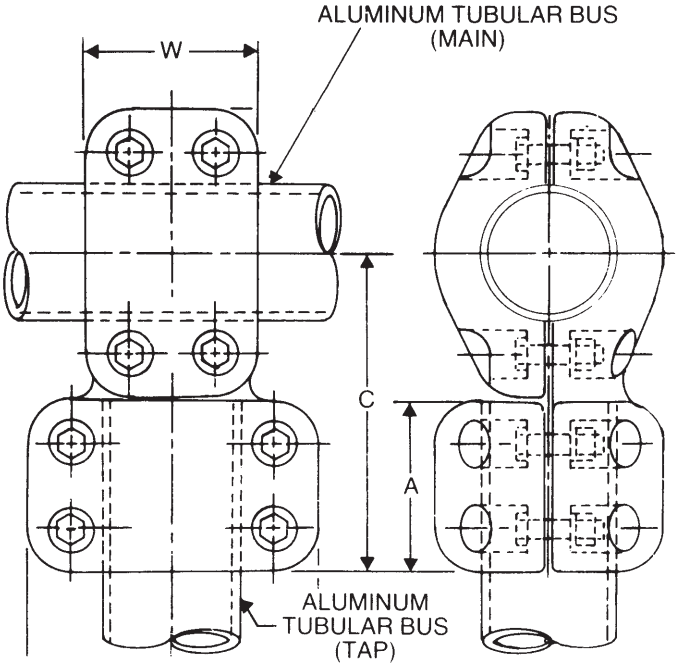

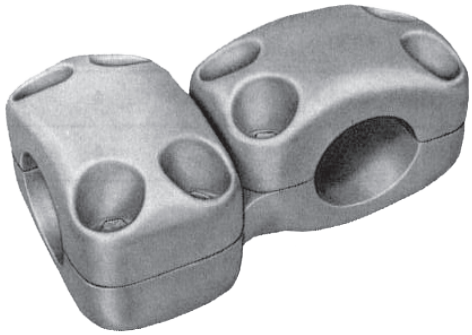

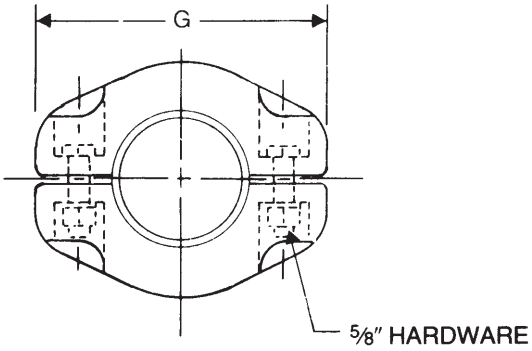

345 kV AND 500 kV LINE-TO-LINE APPLICATIONS

CATALOG NUMBER	ALUMINUM CONDUCTOR SIZE		DIMENSIONS-INCHES (MM)				APPROX. WT. EA. LBS. (KG)
	TUBING MAIN IPS/EHIPS	TUBING TAP IPS/EHIPS	W	C	A	G	
345 KV APPLICATIONS							
HVTTT2020	2	2	4 (101.60)	7-1/4 (184.15)	4 (101.60)	6-1/4 (158.75)	8.3 (3.76)
HVTTT2420	2-1/2	2	4 (101.60)	7-3/8 (187.33)	4 (101.60)	6-1/4 (158.75)	-
HVTTT2424	2-1/2	2-1/2	4 (101.60)	7-3/8 (187.33)	4 (101.60)	6-1/2 (165.10)	10.2 (4.63)
HVTTT3020	3	2	4 (101.60)	7-3/4 (196.85)	4 (101.60)	6-1/4 (158.75)	-
HVTTT3024	3	2-1/2	4 (101.60)	7-3/4 (196.85)	4 (101.60)	6-1/2 (165.10)	-
HVTTT3030	3	3	4 (101.60)	7-3/4 (196.85)	4 (101.60)	7-3/16 (182.56)	-
HVTTT3420	3-1/2	2	4-1/4 (107.95)	8-1/16 (204.79)	4 (101.60)	6-1/4 (158.75)	14.2 (6.44)
HVTTT3424	3-1/2	2-1/2	4-1/4 (107.95)	8-1/16 (204.79)	4 (101.60)	6-1/2 (165.10)	-
HVTTT3430	3-1/2	3	4-1/4 (107.95)	8-1/16 (204.79)	4 (101.60)	7-3/16 (182.56)	-
HVTTT3434	3-1/2	3-1/2	4-1/4 (107.95)	8-5/16 (227.01)	4-1/4 (107.95)	7-7/8 (200.03)	-

Continued on next page

TYPES HVTTT/EVTTT (CONTINUED)

CATALOG NUMBER	ALUMINUM CONDUCTOR SIZE		DIMENSIONS-INCHES (MM)				APPROX. WT. EA. LBS. (KG)
	TUBING MAIN IPS/EHIPS	TUBING TAP IPS/EHIPS	W	C	A	G	
345 KV APPLICATIONS (CONTINUED)							
HVTTT4020	4	2	4-1/4 (107.95)	8-5/16 (211.14)	4 (101.60)	6-1/4 (158.75)	-
HVTTT4024	4	2-1/2	4-1/4 (107.95)	8-5/16 (211.14)	4 (101.60)	6-1/2 (165.10)	12.8 (5.81)
HVTTT4030	4	3	4-1/4 (107.95)	8-5/16 (211.14)	4 (101.60)	7-3/16 (182.56)	-
HVTTT4034	4	3-1/2	4-1/4 (107.95)	8-9/16 (217.49)	4-1/4 (107.95)	7-7/8 (200.03)	-
HVTTT4040	4	4	4-1/4 (107.95)	89-9/16 (217.49)	4-1/4 (107.95)	8-3/8 (212.73)	17.01 (7.72)
†HVTTT5020	5	2	6 (152.40)	89-3/4 (222.25)	4 (101.60)	6-1/4 (158.75)	-
†HVTTT5024	5	2-1/2	6 (152.40)	8-3/4 (222.25)	4 (101.60)	6-1/2 (165.10)	-
†HVTTT5030	5	3	6 (152.40)	8-3/4 (222.25)	4 (101.60)	7-3/16 (182.56)	-
†HVTTT5034	5	3-1/2	6 (152.40)	9 (228.60)	4-1/4 (107.95)	78-7/8 (200.03)	-
†HVTTT5040	5	4	6 (152.40)	9 (228.60)	4-1/4 (107.95)	8-3/8 (212.73)	-
†HVTTT5050	5	5	6 (152.40)	10-3/4 (273.05)	6 (152.40)	9-5/16 (236.54)	-
†HVTTT6020	6	2	6 (152.40)	9-5/16 (236.54)	4 (101.60)	6-1/4 (158.75)	-
†HVTTT6024	6	2-1/2	6 (152.40)	9-5/16 (236.54)	4 (101.60)	6-1/2 (165.10)	-
†HVTTT6030	6	3	6 (152.40)	9-5/16 (236.54)	4 (101.60)	78-3/16 (182.56)	-
†HVTTT6034	6	3-1/2	6 (152.40)	9-9/16 (242.89)	4-1/4 (107.95)	7-7/8 (200.03)	-
†HVTTT6040	6	4	6 (152.40)	9-9/16 (242.89)	4-1/4 (107.95)	8-3/8 (212.73)	24.4 (11.07)
†HVTTT6050	6	5	6 (152.40)	11-5/16 (287.34)	6 (152.40)	9-5/16 (236.54)	27.6 (12.52)
†HVTTT6060	6	6	6 (152.40)	11-5/16 (287.34)	6 (152.40)	10-3/8 (263.53)	32.6 (14.79)
500 KV APPLICATIONS							
EVTTT3030	3	3	5 (127.00)	9-1/16 (230.19)	5 (127.00)	7-7/8 (200.03)	20.3 (9.21)
EVTTT3430	3-1/2	3	5 (127.00)	9-1/8 (231.78)	5 (127.00)	7-7/8 (200.03)	-
EVTTT3434	3-1/2	3-1/2	5 (127.00)	9-1/8 (231.78)	5 (127.00)	8 (203.20)	14.7 (6.67)
EVTTT4030	4	3	5 (127.00)	9-9/16 (242.89)	5 (127.00)	7-7/8 (200.03)	23.0 (10.43)
EVTTT4034	4	3-1/2	5 (127.00)	9-9/16 (242.89)	5 (127.00)	8 (203.20)	-
EVTTT4040	4	4	5 (127.00)	9-9/16 (242.89)	5 (127.00)	8-7/8 (225.43)	24.2 (10.98)
†EVTTT5030	5	3	6 (152.40)	10-1/8 (257.18)	5 (127.00)	7-7/8 (200.03)	27.2 (12.34)
†EVTTT5034	5	3-1/2	6 (152.40)	10-1/8 (257.18)	5 (127.00)	8 (203.20)	24.9 (11.29)
†EVTTT5040	5	4	6 (152.40)	10-1/8 (257.18)	5 (127.00)	8-7/8 (225.43)	28.9 (13.11)
†EVTTT5050	5	5	6 (152.40)	11-1/8 (282.58)	6 (152.40)	10 (254.00)	34.7 (15.74)
†EVTTT6030	6	3	6 (152.40)	10-5/8 (269.88)	5 (127.00)	7-7/8 (200.03)	29.9 (13.56)
†EVTTT6034	6	3-1/2	6 (152.40)	10-5/8 (269.88)	5 (127.00)	8 (203.20)	-
†EVTTT6040	6	4	6 (152.40)	10-5/8 (269.88)	5 (127.00)	8-7/8 (225.43)	-
†EVTTT6050	6	5	6 (152.40)	11-5/8 (295.38)	6 (152.40)	10 (254.00)	37.4 (16.96)
†EVTTT6060	6	6	6 (152.40)	11-5/8 (295.38)	6 (152.40)	11 (279.40)	36.9 (16.74)

†Furnished with 6 clamping bolts for 5" IPS and 6" IPS.

EHV BOLTED TEE CONNECTORS
TUBING MAIN TO FLAT PAD TYPE HVTTF/EVTTF

ALUMINUM
HVTTF/EVTTF

Aluminum alloy, tube to flat, tee connectors are designed for corona free service at 345 and 500 KV respectively. *This catalog number does not include tongue mounting hardware or bolt shields; these components must be ordered separately.* Tongue holes have NEMA spacing. Contact sealant is recommended.

Material: **Castings** – 356-T6 aluminum alloy
Hardware – aluminum alloy

Add suffix: "-HS" for one hardware shield, and "-HS2" for two hardware shields.

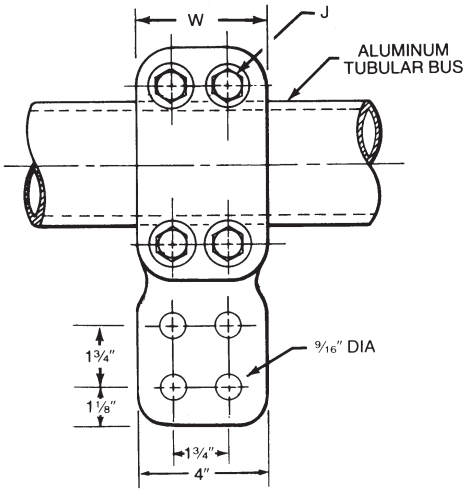

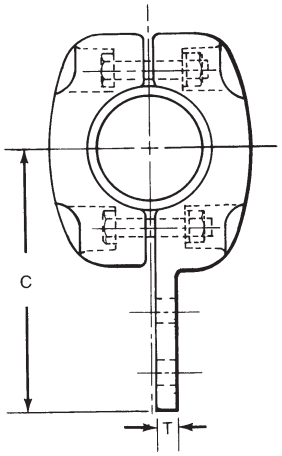

345 kV AND 500 kV LINE-TO-LINE APPLICATIONS

CATALOG NUMBER	ALUMINUM CONDUCTOR SIZE TUBING MAIN IPS/EHIPS	DIMENSIONS – INCHES (MM)				APPROX. WT. EA. LBS. (KG)
		W	C	T	J	
345 KV APPLICATIONS						
HVTTF20D	2	4 (101.60)	7-1/2 (190.50)	1 (25.40)	5/8 (15.88)	6.5 (2.93)
HVTFF24D	2-1/2	4 (101.60)	7-1/2 (190.50)	1 (25.40)	5/8 (15.88)	6.9 (3.13)
HVTTF30D	3	4 (101.60)	7-7/8 (200.03)	1 (25.40)	5/8 (15.88)	8.8 (3.99)
HVTTF40D	4	4-1/4 (107.95)	8-7/16 (214.31)	1 (25.40)	5/8 (15.88)	10.6 (4.02)
†HVTTF50D	5	6 (152.40)	8-15/16 (227.01)	1 (25.40)	5/8 (15.88)	13.9 (6.31)
†HVTTF60D	6	6 (152.40)	9-7/16 (239.71)	1 (25.40)	5/8 (15.88)	17.5 (7.94)
500 KV APPLICATIONS						
EVTTF30D	3	5 (127.00)	8-3/16 (207.96)	1 (25.40)	5/8 (15.88)	11.7 (5.31)
EVTTF40D	4	5 (127.00)	8-11/16 (220.66)	1 (25.40)	5/8 (15.88)	14.2 (6.44)
†EVTTF50D	5	6 (152.40)	9-1/4 (234.95)	1 (25.40)	5/8 (15.88)	18.8 (8.54)
†EVTTF60D	6	6 (152.40)	9-3/4 (247.65)	1 (25.40)	5/8 (15.88)	20.4 (9.25)

†Furnished with 6 clamping bolts for 5" IPS and 6" IPS.

EHV BOLTED TERMINALS FOR CABLE TO FLAT PAD TYPE EVTCF

ALUMINUM
EVTCF

Aluminum alloy, cable to flat, tee connectors are designed for corona free service at 345 and 500 KV respectively. *This catalog number does not include tongue mounting hardware or bolt shields; these components must be ordered separately.* Tongue holes have NEMA spacing. Contact sealant is recommended. To assure corona free operation, cable clamping hardware must be inserted from terminal body side as shown.

Material: **Castings** – 356-T6 aluminum alloy
Hardware – aluminum alloy

Add suffix: "-HS" for one hardware shield, and "-HS2" for two hardware shields.

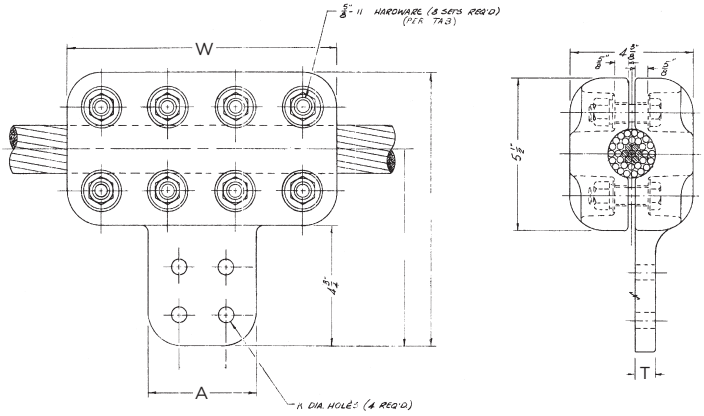

FIGURE 1

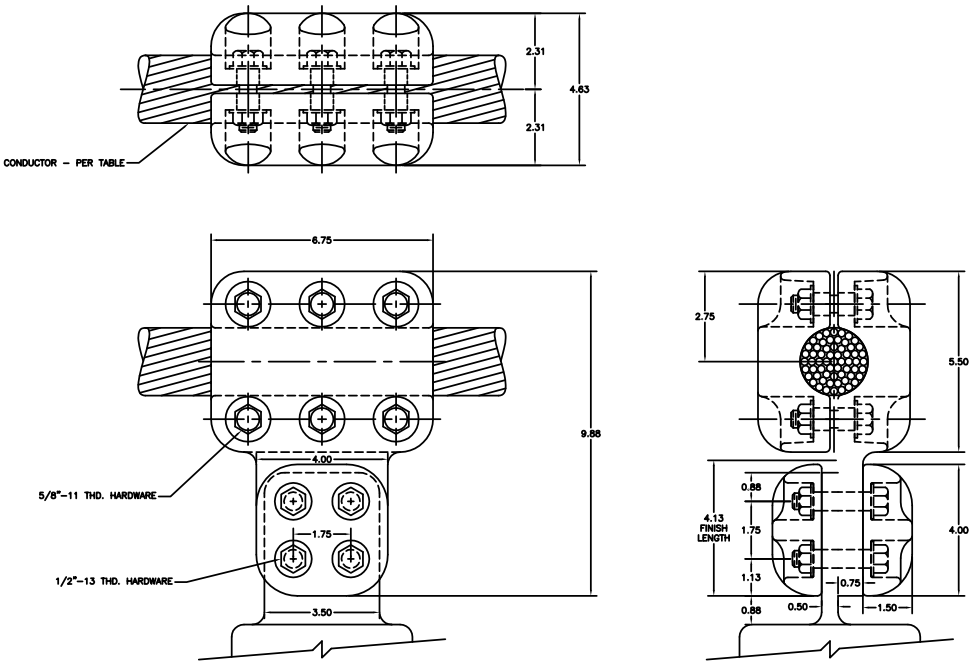

FIGURE 2

345 kV AND 500 kV LINE-TO-LINE APPLICATIONS

CATALOG NUMBER	CABLE SIZE	O.D.	FIGURE #	DIMENSIONS – INCHES (MM)				APPROX. WT. EA. LBS. (KG)
				C	W	H	T	
EVTCF1762D	2156 (84/19) ACSR	1.762"	1	7-1/2 (190.50)	10 (254.00)	10-1/4 (260.35)	3/4 (19.05)	14.7 (6.67)
EVTCF1824D	2500 MCM AAC	1.824"	2	7-1/8 (180.98)	6-3/4 (171.45)	9-7/8 (250.83)	3/4 (19.05)	11.0 (4.99)

EHV BOLTED TEE CONNECTORS CABLE MAIN TO CABLE TAP TYPE HVTBCC/EVTBCC

ALUMINUM
HVTBCC/ EVTBCC

Aluminum alloy, cable to cable tee connectors are designed for corona free service at 345 and 500 KV respectively. Single cable diameter under 1.76 inch for 345 KV and 2.50 inch diameter for 500 KV may not be corona free unless conductors are bundled. Contact sealant is recommended.

Material: **Castings** – 356-T6 aluminum alloy
Hardware – aluminum alloy

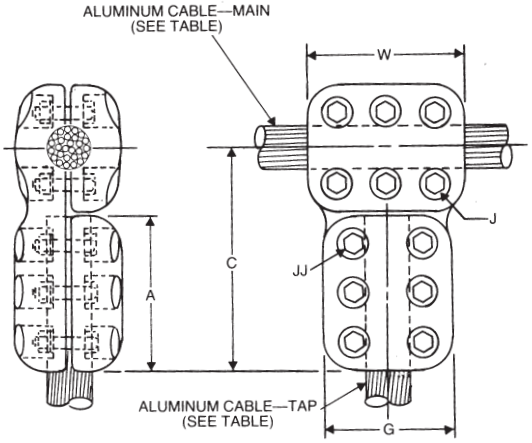

345 kV AND 500 kV LINE-TO-LINE APPLICATIONS

CATALOG NUMBER	ALUMINUM CONDUCTOR DIA. IN.		DIMENSIONS–INCHES (MM)						NUMBER OF BOLTS REQ'D.		APPROX. WT. EA. LBS. (KG)
	MAIN	TAP	W	C	A	G	J	JJ	MAIN	TAP	
345 KV APPLICATIONS											
HVTBCC11961196	1.196	1.196	4 (101.60)	6-3/8 (161.93)	4 (101.60)	4-7/16 (112.71)	1/2 (12.70)	1/2 (12.70)	4	4	7.7 (3.50)
HVTBCC12461246	1.246	1.246	4 (101.60)	6-3/8 (161.93)	4 (101.60)	4-7/16 (112.71)	1/2 (12.70)	1/2 (12.70)	4	4	7.7 (3.50)
HVTBCC13821382	1.382	1.382	4 (101.60)	6-7/16 (163.51)	4 (101.60)	4-5/8 (117.48)	1/2 (12.70)	1/2 (12.70)	4	4	–
HVTBCC14241424	1.424	1.424	4 (101.60)	6-17/32 (165.89)	4 (101.60)	4-13/16 (122.24)	5/8 (15.88)	5/8 (15.88)	4	4	–
HVTBCC14541454	1.454	1.454	4 (101.60)	6-17/32 (165.89)	4 (101.60)	4-13/16 (122.24)	5/8 (15.88)	5/8 (15.88)	4	4	–
HVTBCC15021502	1.502	1.502	4 (101.60)	6-9/16 (166.69)	4 (101.60)	4-7/8 (123.83)	5/8 (15.88)	5/8 (15.88)	4	4	–
HVTBCC16811681	1.681	1.681	6-3/4 (171.45)	9-5/8 (244.48)	6-3/4 (171.45)	5-1/2 (139.70)	5/8 (15.88)	5/8 (15.88)	4	4	–
HVTBCC17621762	1.762	1.762	6-3/4 (171.45)	9-5/8 (244.48)	6-3/4 (171.45)	5-1/2 (139.70)	5/8 (15.88)	5/8 (15.88)	6	6	–
HVTBCC18241454	1.824	1.454	6-3/4 (171.45)	6-7/8 (174.63)	4 (101.60)	4-13/16 (122.24)	5/8 (15.88)	5/8 (15.88)	6	4	–
HVTBCC18241824	1.824	1.824	6-3/4 (171.45)	9-5/8 (244.48)	6-3/4 (171.45)	5-1/2 (139.70)	5/8 (15.88)	5/8 (15.88)	6	6	16.3 (7.39)
HVTBCC18801454	1.880	1.454	6-3/4 (171.45)	6-7/8 (174.63)	4 (101.60)	4-13/16 (122.24)	5/8 (15.88)	5/8 (15.88)	6	4	–
HVTBCC18801880	1.880	1.880	6-3/4 (171.45)	9-5/8 (244.48)	6-3/4 (171.45)	5-1/2 (139.70)	5/8 (15.88)	5/8 (15.88)	6	6	–
HVTBCC19981998	1.998	1.998	6-3/4 (171.45)	9-5/8 (244.48)	6-3/4 (171.45)	5-1/2 (139.70)	5/8 (15.88)	5/8 (15.88)	6	6	–

Continued on next page.

BOLTED TEE CONNECTORS FOR CABLE TO CABLE–(CONTINUED)
TYPES HVTBCC/EVTBCC
345 KV AND 500 KV LINE-TO-LINE APPLICATIONS

CATALOG NUMBER	ALUMINUM CONDUCTOR DIA. IN.		DIMENSIONS–INCHES (MM)						NUMBER OF BOLTS REQ'D.		APPROX. WT. EA. LBS. (KG)
	MAIN	TAP	W	C	A	G	J	JJ	MAIN	TAP	
500 KV APPLICATIONS											
EVTBCC12461246	1.246	1.246	5 (127.00)	7-5/8 (193.68)	5 (127.00)	5 (127.00)	1/2 (17.70)	1/2 (17.70)	4	4	9.8 (4.45)
EVTBCC13821382	1.382	1.382	5 (127.00)	7-11/16 (195.26)	5 (127.00)	5-1/8 (130.18)	1/2 (17.70)	1/2 (17.70)	4	4	–
EVTBCC14241424	1.424	1.424	5 (127.00)	7-13/16 (198.44)	5 (127.00)	5-3/8 (136.53)	5/8 (15.88)	5/8 (15.88)	4	4	–
EVTBCC14541454	1.454	1.454	5 (127.00)	7-13/16 (198.44)	5 (127.00)	5-3/8 (136.53)	5/8 (15.88)	5/8 (15.88)	4	4	–
EVTBCC15021502	1.502	1.502	5 (127.00)	7-13/16 (198.44)	5 (127.00)	5-3/8 (136.53)	5/8 (15.88)	5/8 (15.88)	4	4	–
EVTBCC16811681	1.681	1.681	6 (152.40)	8-15/16 (227.01)	6 (152.40)	5-5/8 (136.53)	5/8 (15.88)	5/8 (15.88)	4	4	–
EVTBCC17621762	1.762	1.762	7-1/2 (190.50)	10-15/32 (265.90)	7-1/2 (190.50)	5-11/16 (144.46)	5/8 (15.88)	5/8 (15.88)	6	6	18.4 (8.35)
EVTBCC18241454	1.824	1.454	7-1/2 (190.50)	8-1/16 (204.79)	5 (127.00)	5-3/8 (136.53)	5/8 (15.88)	5/8 (15.88)	6	4	–
EVTBCC18241824	1.824	1.824	7-1/2 (190.50)	10-9/16 (268.29)	7-1/2 (190.50)	5-7/8 (149.23)	5/8 (15.88)	5/8 (15.88)	6	6	18.5 (8.40)
EVTBCC18801454	1.880	1.454	7-1/2 (190.50)	8-1/16 (204.79)	5 (127.00)	5-3/8 (136.53)	5/8 (15.88)	5/8 (15.88)	6	4	19.0 (8.63)
EVTBCC18801880	1.880	1.880	7-1/2 (190.50)	10-9/16 (268.29)	7-1/2 (190.50)	5/7-8 (149.23)	5/8 (15.88)	5/8 (15.88)	6	6	19.1 (8.68)
EVTBCC19981998	1.998	1.998	7-1/2 (190.50)	10-9/16 (268.29)	7-1/2 (190.50)	5-7/8 (149.23)	5/8 (15.88)	5/8 (15.88)	6	6	19.1 (8.68)

EHV TEE-TAPS COMPRESSION CABLE TO CABLE-OPEN RUN AAC, ALLOY, ACAR AND ACSR CONDUCTORS

ALUMINUM
ORT22

Aluminum compression tee connectors are designed for corona free service at 500 KV. Single cable diameter under 1.76 inch for 345 KV and 2.50 inch diameter for 500 KV may not be corona free unless conductors are bundled. Tap barrel is prefilled with inhibitor, ends are capped and tapers are coated with protective plastic.

Material: Seamless Extruded Aluminum Alloy Tube

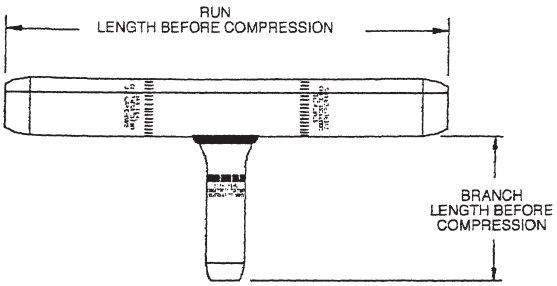

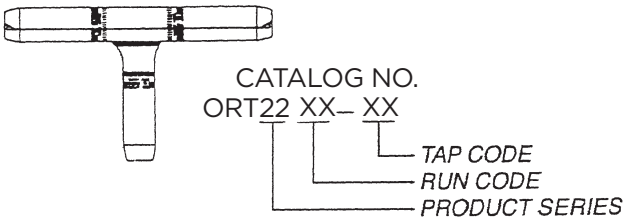

345 kV AND 500 kV LINE-TO-LINE APPLICATIONS

CONDUCTOR RANGE (1)			RUN OR TAP CODE	LENGTH BEFORE COMPRESSION		DIE SIZE	MINIMUM PRESS SIZE (TONS)	NET WEIGHT LB (KG)
O.D. IN. (MM)	AAC SIZE KCMIL	ACSR SIZE KCMIL (STR)		RUN IN (MM)	TAP IN (MM)			
1.026 - 1.131 (26.1 - 28.7)	795, 800, 874.5, 900, 954	715.5 (26/7) (30/19), 795 (24/7) (26.7) (45/7) 795 (54/7) 795 (36/1) 900 (45/7)	12	17.2 (436)	6.2 (157)	12CD	60	2.40 (1.09)
1.140 - 1.235 (29.0 - 31.4)	1000, 1033.5	795.5 (30/19)	13	18.6 (473)	6.7 (170)	13CD 30AH	60	3.00 (1.36)
	1100, 1113	795.5 (30/19), 900 (54/7), 954 (45/7) (54/7), 1033 (36/1) (45/7)				13CD		
1.236 - 1.330 (31.5 - 33.8)	1192.5, 1200, 1250, 1272, 1300	954 (30/19), 1113 (45/7) (54/19), 1192.5 (45/7), 1272 (36/1)	14	20.1 (509)	7.2 (183)	14CD 34AH	60	3.80 (1.73)
1.331 - 1.425 (33.9 - 36.2)	1351.5, 1400, 1431, 1500, 1510.5	1192.5 (54/19), 1272 (45/7) (54/19), 1351.5 (45/7) (54/19)	15	21.5 (546)	7.7 (197)	15CD 36AH	60	4.70 (2.14)
1.426 - 1.520	1590, 1600, 1700	1431 (45/7) (54/19), 1510.5 (45/7) (54/19), 1590 (45/7)	16	21.3 (541)	8.2 (210)	16CD 38AH	60	5.30 (2.41)
1.521 - 1.615	1750, 1800, 1900	1590 (54/19), 1780 (84/19) 1869 (68/7)	17	22.6 (575)	8.8 (223)	17CD 40AH	60	6.30 (2.86)
1.630 - 1.805	2000, 2250, 2300	2034.5 (72/7), 2057 (76/19) 2167 (72/7)	19	25.3 (643)	9.8 (249)	19CD 44AH	100	8.90 (4.04)
	–	2156 (84/19), 2312 (76/19)				19CD		

NOTES:
(1) These tee taps also approved applications on AAAC and ACAR conductors within the diameter ranges listed.
(2) Standard Hex dies not available for some sleeve & conductor combinations. If no AH die listed for conductor, use only the CD die shown.
(3) Install with Fargo type UJC or, for lowest resistance connection, type HTJC inhibitor compound.

EHV TEE-TAPS
COMPRESSION CABLE TO PAD-OPEN RUN
AAC, ACAR AND ACSR CONDUCTOR

ALUMINUM
ORT21

Aluminum compression tee connectors are designed for corona free service at 500 KV. Single cable diameter under 1.76 inch for 345 KV and 2.50 inch diameter for 500 KV may not be corona free unless conductors are bundled. *Hardware shields and hardware must be ordered separately.* Contact sealant is recommended.

Tapers and pad are coated with protective strippable plastic. Pad holes have NEMA spacing.

Material: Seamless Extruded Aluminum Alloy Tube
Pad–Pure Cast Aluminum

Add suffix: "-HS" for one hardware shield, and "-HS2" for two hardware shields.

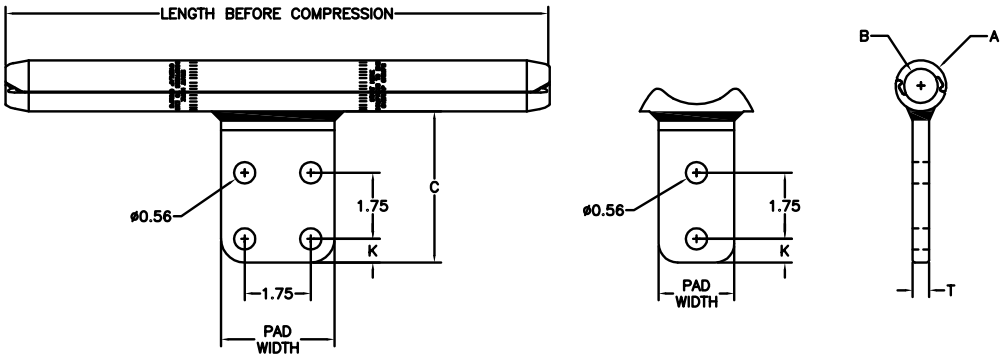

345 kV AND 500 kV LINE-TO-LINE APPLICATIONS

CATALOG NUMBER	CONDUCTOR RANGE (1) O.D. (IN.)	AAC SIZE KCMIL	ACSR SIZE KCMIL (STR)	PAD DETAILS BOLT HOLES	WIDTH IN (MM)	LENGTH BEFORE COMPR. IN (MM)	DIE SIZE (2)	MINIMUM PRESS (TONS)	NET WEIGHT LB (KG)
ORT2112 ORT2112D	1.026 - 1.131 (26.1 -28.7)	795, 800, 874.5, 900, 954	715.5 (24/7) (26/7) (30/19), 795 (24/7) (26/7) (45/7) (54/7), 795 (36/1), 900 (45/7)	4	3.0 (76) 4.0 (102)	17.3 (439) 18.3 (465)	12CD	60	3.1 (1.35) 3.3 (1.50)
ORT2113 ORT2113D	1.140 - 1.235 (29.0 - 31.4)	1000, 1003.5	795 (30/19)	4	3.0 (76) 4.0 (102)	18.5 (470) 19.5 (495)	13CD or 30AH	60	3.6 (1.57) 3.8 (1.66)
		1100, 1113	900 (54/7) 954 (45/7) (54/7), 1033.5 (36/1) (45/7)	4			13CD		
ORT2114 ORT2114D	1.236 - 1.330 (31.5 - 33.8)	1192.5, 1200 1250, 1272, 1300	954 (30/19), 1033.5 (54/7), 1113 (45/7) (54/19), 1192.5 (45/7)	4	3.0 (76) 4.0 (102)	19.8 (503) 20.8 (528)	14CD or 34AH	60	4.6 (2.00) 4.8 (2.09)
ORT2115 ORT2115D	1.331 - 1.425 (33.9 - 38.2)	1351.5, 1400 1431, 1500 1510.5	1192.5 (54/19), 1272 (45/7) (54/19), 1351.5 (45/7) (54/19)	4	3.0 (76) 4.0 (102)	20.7 (526) 21.7 (551)	15CD or 36AH	60	5.5 (2.40) 5.7 (2.48)
ORT2116 ORT2116D	1.425 - 1.520 (36.3 - 38.6)	1590, 1600, 1700	1431 (45/7) (54/19), 1510.5 (45/7) (54/19), 1590 (45/7)	4	3.0 (76) 4.0 (102)	21.6 (549) 22.9 (574)	16CD or 38AH	60	6.1 (2.66) 6.3 (2.74)
ORT2117	1.521 - 1.615 (38.7 - 41.0)	1750, 1800, 1900	1590 (54/19), 1780 (84/19), 1869 (68/7)	4	4.0 (102)	23.5 (597)	17CD or 40AH	60	7.8 (3.40)
ORT2119	1.630 - 1.805 (41.4 - 45.8)	2000, 2250, 2300	2034.5 (72/7), 2057 (76/19) 2167 (72/7)	4	4.0 (102)	25.4 (645)	19CD or 44AH	100	10.2 (4.43)
		–	2156 (84/19), 2312 (76/19)	4			19CD		

NOTES:
(1) These tee taps are also approved application on AAAC and ACAR conductors within the diameter ranges listed.
(2) Hex dies not available for some sleeve & conductor combinations. If no AH die listed for conductor, use only the CD die shown.
(3) Install with Fargo type UJC or, for lowest resistance connection, type HTJC inhibitor compound.

EHV TEES WELDMENT ALUMINUM TUBE TO TUBE

ALUMINUM
WTT

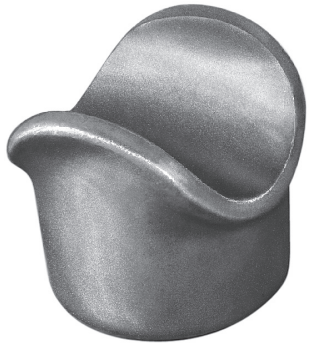

Aluminum alloy straight weldment tee for connecting aluminum tubing main to aluminum tubing tap.

Material: **Casting** – 356-T6 aluminum alloy

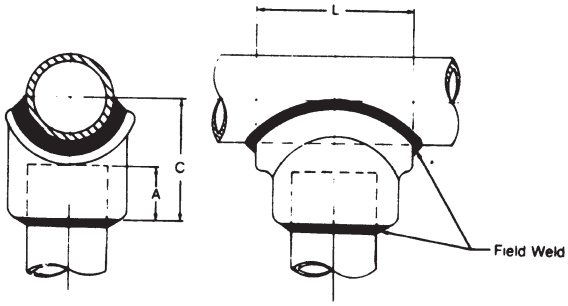

345 kV AND 500 kV LINE-TO-LINE APPLICATIONS

CATALOG NUMBER	ALUMINUM CONDUCTOR SIZE		DIMENSIONS – INCHES (MM)			APPROX. WT. EA. LBS. (KG)
	TUBING MAIN IPS/EHIPS	TUBING TAP IPS/EHIPS	L	C	A	
WTT2020	2	2	3-3/4 (95.25)	2-7/8 (73.02)	1-1/4 (31.75)	.98 (44)
WTT2420	2-1/2	2	4 (101.5)	3-19/32 (91.28)	1-3/4 (44.45)	1.2 (.54)
WTT2424	2-1/2	2-1/2	4 (101.6)	3-3/8 (85.72)	1-1/2 (38.1)	1.4 (.64)
WTT3020	3	2	4 (101.6)	4 (101.6)	1-3/4 (44.45)	1.6 (.72)
WTT3024	3	2-1/2	4-3/8 (111.12)	4-1/4 (107.95)	2 (50.8)	1.7 (.77)
WTT3030	3	3	5 (127.0)	4 (101.6)	1-3/4 (44.45)	2.3 (.10)
WTT3420	3-1/2	2	4 (101.6)	4-1/4 (107.95)	1-3/4 (44.45)	1.3 (.59)
WTT3424	3-1/2	2-1/2	4-3/8 (111.12)	4-1/2 (114.3)	2 (50.8)	2.0 (.91)
WTT3434	3-1/2	3-1/2	5-5/8 (142.88)	4-1/4 (107.95)	1-3/4 (44.45)	3.9 (1.77)
WTT4020	4	2	4 (101.6)	4-3/4 (120.65)	2 (50.8)	1.9 (.86)
WTT4024	4	2-1/2	4-3/8 (111.12)	4-3/4 (120.65)	2 (50.8)	1.9 (.86)
WTT4030	4	3	5-7/8 (149.22)	5-1/4 (133.35)	2-1/2 (63.5)	2.0 (.91)
WTT4040	4	4	6-1/8 (155.58)	4-3/4 (120.65)	2 (50.8)	3.5 (1.59)
WTT5020	5	2	4 (101.6)	5-3/8 (136.52)	2 (50.8)	2.4 (1.09)
WTT5024	5	2-1/2	4-3/8 (111.12)	4-3/4 (120.65)	1-1/2 (38.1)	2.1 (.95)
WTT5030	5	3	5-5/8 (142.88)	5-7/8 (149.22)	2-1/2 (63.5)	38 (1.72)
WTT5034	5	3-1/2	5-5/8 (142.88)	5-7/8 (149.22)	2-1/2 (63.5)	3.9 (1.77)
WTT5040	5	4	6-1/8 (155.58)	5-3/4 (146.05)	2-1/2 (63.5)	6.0 (2.72)

Continued on the next page

EHV TEES WELDMENT
ALUMINUM TUBE TO TUBE (CONTINUED)

345 kV AND 500 kV LINE-TO-LINE APPLICATIONS

CATALOG NUMBER	ALUMINUM CONDUCTOR SIZE		DIMENSIONS – INCHES (MM)			APPROX. WT. EA. LBS. (KG)
	TUBING MAIN IPS/EHIPS	TUBING TAP IPS/EHIPS	L	C	A	
WTT5050	5	5	7-1/4	5-1/4	2	5.3
WTT6030	6	3	5-1/2	5-7/8	2	2.8
WTT6040	6	4	6-1/8	6-3/8	2-1/2	4.4
WTT6060	6	6	8-1/2	6-3/8	2-1/2	6.8

EHV TEES WELDMENT ALUMINUM TUBE TO TUBE

ALUMINUM
WTT15

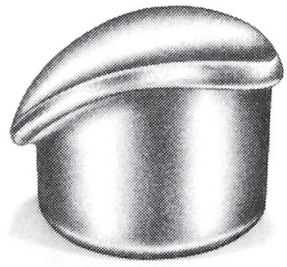

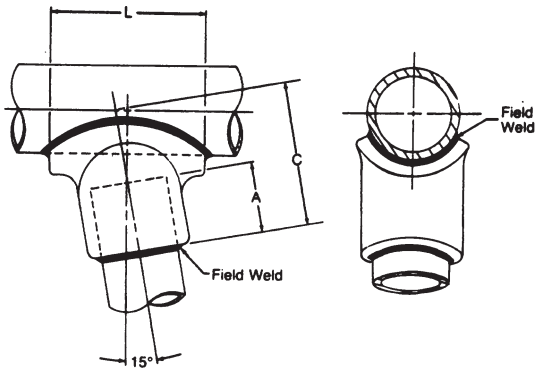

Aluminum alloy angle weldment tee for connecting aluminum tubing main to aluminum tubing tap at 15 degrees.

Material: **Casting** – 356-T6 aluminum alloy

345 kV AND 500 kV LINE-TO-LINE APPLICATIONS

CATALOG NUMBER	ALUMINUM CONDUCTOR SIZE		DIMENSIONS – INCHES (MM)			APPROX. WT. EA. LBS. (KG)
	TUBING MAIN IPS/EHIPS	TUBING TAP IPS/EHIPS	L	C	A	
WTT152020	2	2	4 (101.6)	3-1/4 (87.55)	1-1/4 (31.75)	.97 (44)
WTT152420	2-1/2	2	4 (101.6)	4 (101.6)	1-3/4 (44.45)	1.4 (.64)
WTT152424	2-1/2	2-1/2	4-5/8 (117.48)	4-5/16 (109.54)	2 (50.8)	2.2 (1.0)
WTT153020	3	2	4 (101.6)	3-7/8 (98.42)	1-1/4 (31.75)	1.3 (.59)
WTT153024	3	2-1/2	4-3/8 (111.12)	4-11/16 (119.06)	2 (50.8)	2.3 (1.04)
WTT153030	3	3	5-1/8 (130.18)	4-11/16 (119.06)	1-3/4 (44.45)	2.4 (1.09)
WTT153420	3-1/2	2	4 (101.6)	4-1/8 (104.78)	1-1/4 (31.75)	1.3 (.59)
WTT153424	3-1/2	2-1/2	4-3/8 (111.12)	4-1/2 (114.3)	1-1/2 (38.1)	1.6 (.72)
WTT153434	3-1/2	3-1/2	6 (152.4)	5-1/8 (130.18)	2 (50.8)	3.8 (1.72)
WTT154020	4	2	4 (101.6)	4-3/8 (111.12)	1-1/4 (31.75)	1.4 (.64)
WTT154024	4	2-1/2	4-3/8 (111.12)	4-3/4 (120.65)	1-1/2 (38.1)	1.6 (.72)
WTT154030	4	3	5-1/8 (130.18)	5 (127.0)	1-3/4 (44.45)	2.5 (1.13)
WTT154040	4	4	6-1/8 (155.58)	5-7/16 (138.11)	2 (50.8)	4.1 (1.86)
WTT155020	5	2	4 (101.6)	5-3/4 (146.05)	2 (50.8)	2.0 (.91)
WTT155024	5	2-1/2	4-3/8 (111.12)	5-3/8 (136.52)	1-1/2 (38.1)	1.8 (.82)
WTT155030	5	3	5-1/8 (130.18)	5-11/16 (144.46)	2-1/2 (63.5)	3.5 (1.59)
WTT156030	6	3	5-1/8 (130.18)	7 (177.8)	2-1/2 (63.5)	3.3 (1.50)
WTT156040	6	4	6-1/8 (155.58)	6-5/8 (168.28)	2 (50.8)	4.4 (2.0)

EHV TEES WELDMENT
ALUMINUM TUBE TO TWO TUBE

ALUMINUM
WTT215

Aluminum alloy angle weldment tee for connecting aluminum tubing main to two aluminum tubing taps at 15 degrees.

Material: **Casting** – 356-T6 aluminum alloy

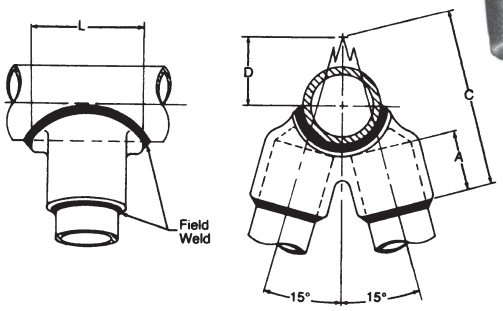

345 kV AND 500 kV LINE-TO-LINE APPLICATIONS

CATALOG NUMBER	ALUMINUM CONDUCTOR SIZE		DIMENSIONS – INCHES (MM)				APPROX. WT. EA. LBS. (KG)
	TUBING MAIN IPS/EHIPS	TUBING TAP IPS/EHIPS	L	C	D	A	
WTT2152020	2	2	4 (101.6)	7-5/16 (185.74)	4-3/8 (111.12)	1-1/2 (38.1)	2.1 (.95)
WTT2152420	2-1/2	2	4 (101.6)	7-3/4 (196.85)	4-5/16 (109.54)	1-3/4 (44.45)	2.2 (1.0)
WTT2152424	2-1/2	2-1/2	4-1/2 (114.3)	8-7/8 (225.42)	5-3/16 (131.76)	2 (50.8)	3.2 (1.45)
WTT2153020	3	2	4 (101.6)	7-3/4 (196.85)	3-7/8 (98.42)	1-3/4 (44.45)	2.6 (1.18)
WTT2153024	3	2-1/2	4-3/8 (111.12)	8-15/16 (227.01)	4-7/8 (123.82)	2 (50.8)	3.0 (1.36)
WTT2153030	3	3	5-1/2 (139.7)	10 (254.0)	6-1/4 (158.75)	1-3/4 (44.45)	5.0 (2.27)
WTT2153420	3-1/2	2	4 (101.6)	7-3/4 (196.85)	3-5/8 (92.08)	1-3/4 (44.45)	2.6 (1.18)
WTT2153424	3-1/2	2-1/2	4-3/8 (111.12)	9-3/16 (296.86)	4-3/4 (120.65)	2 (50.8)	3.5 (2.99)
WTT2153434	3-1/2	3-1/2	6 (152.4)	11-11/16 (296.86)	7 (177.8)	2-1/2 (63.5)	6.6 (2.99)
WTT2154020	4	2	4-3/8 (111.12)	8 (203.2)	3-3/8 (85.72)	2 (50.8)	3.1 (1.41)
WTT2154024	4	2-1/2	4-3/8 (111.12)	8-15/16 (227.01)	4-3/8 (111.12)	2 (50.8)	3.9 (1.77)
WTT2154030	4	3	5-1/8 (130.18)	11-1/4 (285.75)	5-11/16 (144.46)	3 (76.2)	6.9 (3.13)
WTT2154040	4	4	5-7/16 (138.11)	11-1/8 (282.58)	6-1/4 (158.75)	2-3/8 (60.32)	5.8 (2.54)
WTT2155020	5	2	5-1/8 (130.18)	8-1/16 (204.79)	3-1/8 (79.38)	1-3/4 (44.45)	3.6 (1.63)
WTT2155024	5	2-1/2	4-3/8 (111.12)	8-7/8 (225.42)	3-3/4 (95.25)	2 (50.8)	2.4 (1.09)
WTT2155030	5	3	5-1/8 (130.18)	10-15/16 (277.81)	5-5/16 (134.94)	2-1/2 (63.5)	6.6 (2.99)
WTT2156030	6	3	5-1/8 (130.18)	10-15/16 (277.81)	4-3/4 (120.65)	2-1/2 (63.5)	6.2 (2.81)
WTT2156040	6	4	6-1/8 (155.58)	12-11/16 (322.26)	6-9/16 (166.69)	2-1/2 (63.5)	9.0 (4.08)

EHV WELDED TEE CONNECTOR TUBE TO FLAT PAD TYPE WTTFR

ALUMINUM
WTTFR

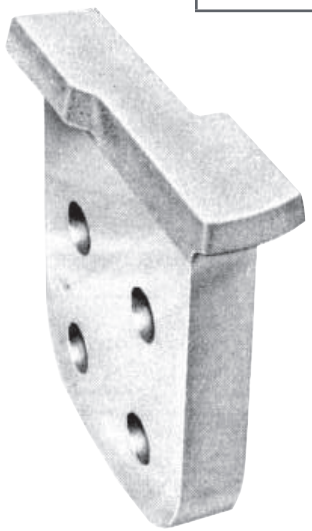

Aluminum alloy weldment, range taking tee for connecting aluminum tubing main to flat. Tongue holes have NEMA spacing. Contact surfaces are finished on both sides of tongue. The saddle configuration provides a weld area equivalent to 110% of the cross-sectional area of the tongue.
This design is for corona free EHV service when bolt shields are installed. *Catalog number does not include hardware shields or mounting hardware.* Refer to type EVHS-D for bolt shields. Contact sealant is recommended for pads after welding.

Material: **Casting** – 356-T6 aluminum alloy

Note: To obtain 90˚ transverse type, add -90 to catalog number; example: WTTFR-30-60-D-90

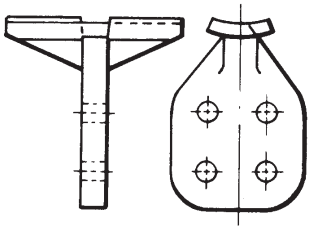

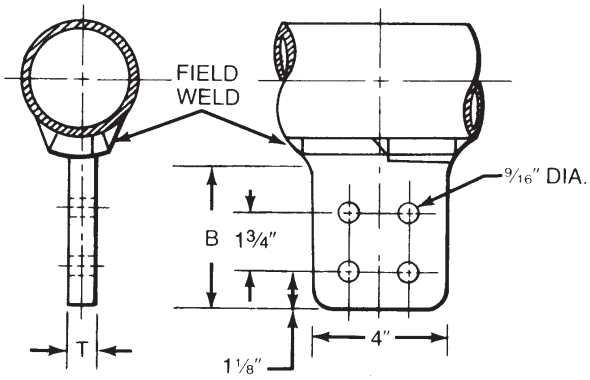

345 kV AND 500 kV LINE-TO-LINE APPLICATIONS

CATALOG NUMBER	ALUMINUM CONDUCTOR RANGE IPS/EHIPS	DIMENSIONS – INCHES (MM)		APPROX. WT. EA. LBS.
		B	T	
WTTFR1024D	1 thru 2-1/2	4-1/8 (104.78)	1/2 (12.70)	1.2 (.54)
WTTFR3060D	3 thru 6	4-1/8 (104.78)	3/4 (19.05)	1.6 (.73)

EHV WELDED TEE CONNECTORS TUBE TO FLAT SELF SHIELDING TYPE EVWTF

ALUMINUM
EVWTF

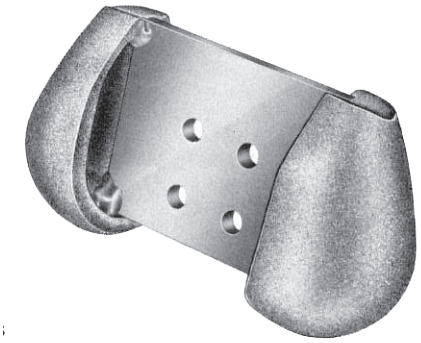

Aluminum alloy weldment, range taking tee for connecting aluminum tubing main to flat. Tongue holes have NEMA spacing. Contact surfaces are finished on both sides of tongue. This design is for corona free service at 500 KV with or without taps attached. No bolt shields are required due to built-in recesses. Maximum terminal pad thickness is one (1) inch. Contact sealant is recommended after welding.

Material: **Casting** – 356-T6 aluminum alloy
Pad – 6061-T6 aluminum alloy

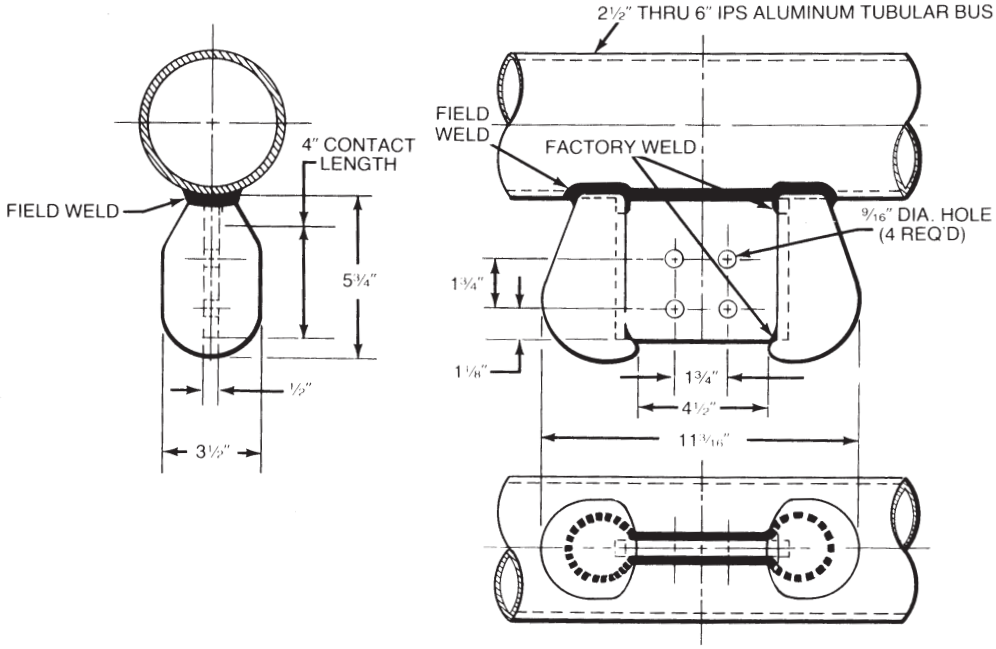

345 kV AND 500 kV LINE-TO-LINE APPLICATIONS

CATALOG NUMBER	ALUMINUM CONDUCTOR RANGE IPS/EHIPS	APPROX. WT. EA. LBS. (KG)
EVWTF2460D	2-1/2 thru 6	5.22 (2.37)

EHV WELDED TRIFURCATING TEE CONNECTORS TUBE TO THREE FLAT PADS TYPE EVTT3F

ALUMINUM
EVTT3F

Aluminum alloy tubing to pads tee connectors are designed for corona free service at 500 KV. Bolt shields are not required due to recessed pads. Mounting hardware must be ordered separately. See compression terminal Type CCL-EHV for tapping off the EVTT3F pad. Maximum terminal pad thickness is one (1") inch. Contact sealant is recommended for contact pad after welding.
Bolt shields not required on recessed pad connections.

Material: **Castings** – 356-T6 aluminum alloy
Pads – 6061-T6 aluminum alloy

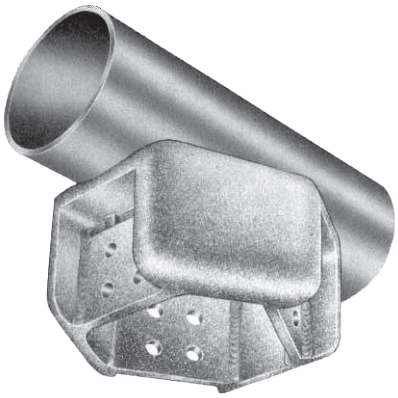

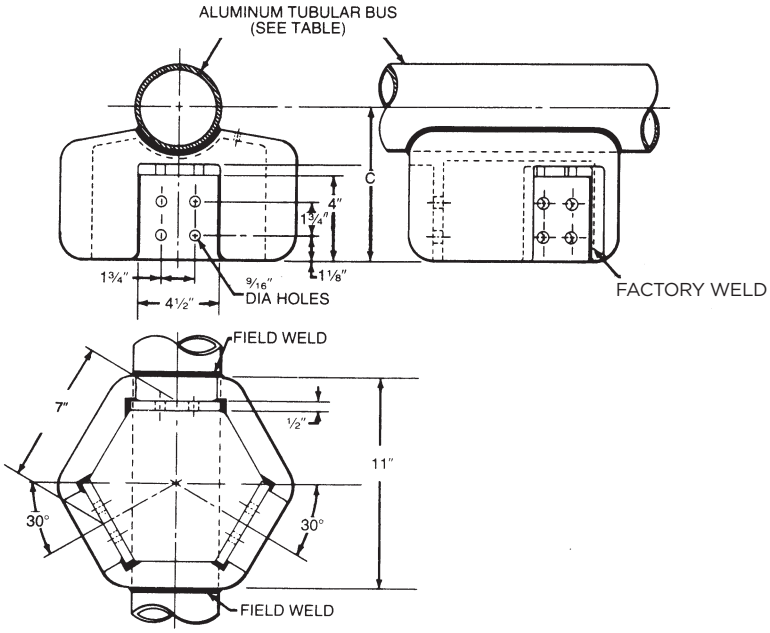

345 kV AND 500 kV LINE-TO-LINE APPLICATIONS

CATALOG NUMBER	ALUMINUM CONDUCTOR SIZE IPS/EHIPS	DIMENSION C	APPROX. WT. EA. LBS. (KG)
EVTT3F24	2-1/2	6-3/4 (171.45)	—
EVTT3F30	3	6-15/16 (176.21)	21.5 (9.76)
EVTT3F34	3-1/2	7-1/2 (190.50)	—
EVTT3F40	4	7-7/16 (188.91)	22.3 (10.12)
EVTT3F50	5	8-1/16 (204.79)	22.5 (10.21)
EVTT3F60	6	8-9/16 (217.49)	22.5 (10.21)

SUBSTATION BUS SUPPORTS

EHV BOLTED BUS SUPPORTS TYPES EVTS AND HVTS

ALUMINUM

EVTS/HVTS

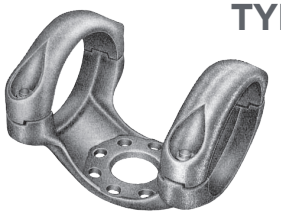

Aluminum alloy, bolted, rigid or slip fit, tubular bus supports are designed for corona free service at 500 KV. The cap members can be rotated to provide rigid or slip-free clamping. One static eliminator spring is furnished in each cap.

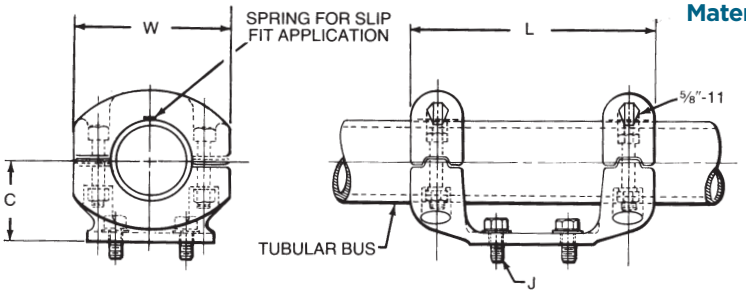

Material:
- **Casting** – 356-T6 aluminum alloy
- **Springs** – stainless steel
- **Clamping Hardware** – aluminum alloy
- **Mounting Hardware** – galvanized steel

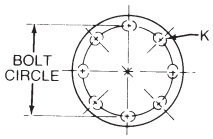

345 kV AND 500 kV LINE-TO-LINE APPLICATIONS

CATALOG NUMBER	ALUMINUM CONDUCTOR SIZE IPS/EHIPS	BOLT CIRCLE DIA. IN.	DIMENSIONS – INCHES (MM)					APPROX. WT. EA. LBS. (KG)
			L	C	W	J	K	
EVTS305	3	5	12 (304.80)	3-5/8 (92.08)	7-1/4 (184.15)	5/8 (15.88)	11/16 X 7/8 (17.46 X 22.23)	7.8 (3.54)
EVTS345	3-1/2	5	12 (304.80)	4 (101.60)	7-3/4 (196.85)	5/8 (15.88)	11/16 X 7/8 (17.46 X 22.23)	8.6 (3.90)
EVTS405	4	5	12 (304.80)	4-1/2 (114.30)	8-1/2 (215.90)	5/8 (15.88)	11/16 X 7/8 (17.46 X 22.23)	9.9 (4.49)
EVTS505	5	5	12 (304.80)	4-7/8 (123.83)	9-1/2 (241.30)	5/8 (15.88)	11/16 X 7/8 (17.46 X 22.23)	10.2 (4.63)
EVTS605	6	5	12 (304.80)	5-3/8 (136.53)	10-3/8 (263.53)	5/8 (15.88)	11/16 X 7/8 (17.46 X 22.23)	11.9 (5.40)
EVTS307	3	7	14 (355.60)	3-5/8 (92.08)	7-1/4 (184.15)	3/4 (19.05)	13/16 X 1 (20.64 X 25.40)	8.9 (4.04)
EVTS347	3-1/2	7	14 (355.60)	4 (101.60)	7-3/4 (196.85)	3/4 (19.05)	13/16 X 1 (20.64 X 25.40)	9.4 (4.27)
EVTS407	4	7	14 (355.60)	4-1/2 (114.30)	8-1/2 (215.90)	3/4 (19.05)	13/16 X 1 (20.64 X 25.40)	10.0 (4.54)
EVTS507	5	7	14 (355.60)	4-7/8 (123.83)	9-1/2 (241.30)	3/4 (19.05)	13/16 X 1 (20.64 X 25.40)	10.4 (4.72)
EVTS607	6	7	14 (355.60)	5-3/8 (136.53)	10-3/8 (263.53)	3/4 (19.05)	13/16 X 1 (20.64 X 25.40)	10.8 (4.90)
HVTS205	2	5	11 (279.4)	2-3/4 (69.85)	5-7/8 (149.22)	5/8 (15.88)	11/16 X 7/8 (17.46 X 22.23)	4.7 (2.13)
HVTS245	2-1/2	5	11 (279.4)	3-1/8 (79.37)	6-3/8 (161.92)	5/8 (15.88)	11/16 X 7/8 (17.46 X 22.23)	5.5 (2.49)
HVTS305	3	5	11 (279.4)	3-3/8 (85.72)	7 (177.89)	5/8 (15.88)	11/16 X 7/8 (17.46 X 22.23)	7.4 (3.57)
HVTS345	3-1/2	5	11 (279.4)	4 (101.60)	7-1/2 (190.5)	5/8 (15.88)	11/16 X 7/8 (17.46 X 22.23)	8.2 (3.72)
HVTS405	4	5	11 (279.4)	4-1/2 (114.30)	8 (203.2)	5/8 (15.88)	11/16 X 7/8 (17.46 X 22.23)	9.4 (4.26)
HVTS505	5	5	11 (279.4)	4-7/8 (123.83)	9-1/8 (231.77)	5/8 (15.88)	11/16 X 7/8 (17.46 X 22.23)	9.7 (4.40)
HVTS605	6	5	11 (279.4)	5-3/8 (136.53)	10-1/8 (257.17)	5/8 (15.88)	11/16 X 7/8 (17.46 X 22.23)	11.3 (5.13)
HVTS207	2	7	13 (330.2)	2-3/4 (69.85)	5-7/8 (149.22)	3/4 (19.05)	13/16 X 1 (20.64 X 25.40)	8.1 (3.67)
HVTS247	2-1/2	7	13 (330.2)	3-1/8 (79.37)	6-3/8 (161.92)	3/4 (19.05)	13/16 X 1 (20.64 X 25.40)	8.4 (3.81)
HVTS307	3	7	13 (330.2)	3-3/8 (85.72)	7 (177.89)	3/4 (19.05)	13/16 X 1 (20.64 X 25.40)	8.5 (3.86)
HVTS347	3-1/2	7	13 (330.2)	4 (101.60)	7-1/2 (190.5)	3/4 (19.05)	13/16 X 1 (20.64 X 25.40)	9.0 (4.08)
HVTS407	4	7	13 (330.2)	4-1/2 (114.30)	8 (203.2)	3/4 (19.05)	13/16 X 1 (20.64 X 25.40)	9.5 (4.31)
HVTS507	5	7	13 (330.2)	4-7/8 (123.83)	9-1/8 (231.77)	3/4 (19.05)	13/16 X 1 (20.64 X 25.40)	9.9 (4.49)
HVTS607	6	7	13 (330.2)	5-3/8 (136.53)	10-1/8 (257.17)	3/4 (19.05)	13/16 X 1 (20.64 X 25.40)	10.3 (4.67)

SUBSTATION BUS SUPPORTS

EHV BOLTED BUS SUPPORTS FOR CABLE TYPE HVCS

ALUMINUM
HVCS

Aluminum alloy, bolted cable, bus supports are corona free single cable bus supports for 345 KV service. For mounting to base of insulator, add "B" to catalog number (example: HVCS-1996-5-B); bolt length will be increased, nuts will be furnished, and weep holes will be drilled in cap as shown.

Material: **Casting** – 356-T6 aluminum alloy
Bolts and Lockwashers – galvanized steel

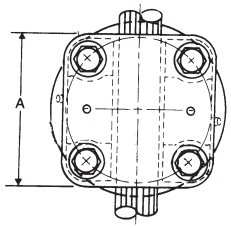

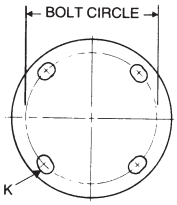

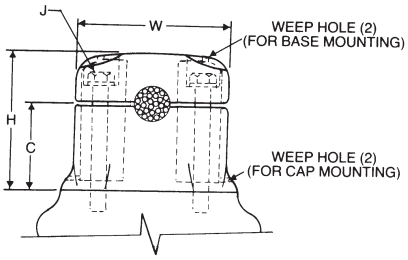

345 kV AND 500 kV LINE-TO-LINE APPLICATIONS

CATALOG NUMBER	BOLT CIRCLE DIA. IN.	ALUMINUM CONDUCTOR SIZE (IN.)	DIMENSIONS – INCHES (MM)						APPROX. WT. EA. LBS. (KG)
			A	C	W	H	J	K	
HVCS10265	5	795 MCM ALUM. -37 STR (1.026)	5-17/32 (138.91)	1-5/16 (49.21)	6-1/4 (158.75)	3-1/8 (79.38)	5/8 (15.88)	11/16 X 7/8 (17.46 X 22.23)	4.2 (1.89)
HVCS11085	5	795 (26/7) ACSR (1.108)	5-17/32 (138.91)	1-5/16 (49.21)	6-1/4 (158.75)	3-1/8 (79.38)	5/8 (15.88)	11/16 X 7/8 (17.46 X 22.23)	4.2 (1.89)
HVCS11625	5	900 MCM ALUM. (1.162)	5-17/32 (138.91)	1-5/16 (49.21)	6-1/4 (158.75)	3-1/8 (79.38)	5/8 (15.88)	11/16 X 7/8 (17.46 X 22.23)	4.2 (1.89)
HVCS12165	5	1113 MCM ALUM. (1.216)	5-17/32 (138.91)	1-5/16 (49.21)	6-1/4 (158.75)	3-1/8 (79.38)	5/8 (15.88)	11/16 X 7/8 (17.46 X 22.23)	4.2 (1.89)
HVCS12995	5	1272 MCM ALUM. (1.300)	5-17/32 (138.91)	1-5/16 (49.21)	6-1/4 (158.75)	3-1/8 (79.38)	5/8 (15.88)	11/16 X 7/8 (17.46 X 22.23)	4.3 (1.95)
HVCS17625	5	2156 MCM 84/19 ACSR (1.762)	5-17/32 (138.91)	2 (50.80)	6-1/4 (158.75)	4-5/32 (105.57)	5/8 (15.88)	11/16 X 7/8 (17.46 X 22.23)	6.5 (2.95)
HVCS18245	5	2500 MCM ALUM. (1.824)	5-17/32 (138.91)	2 (50.80)	6-1/4 (158.75)	4-5/32 (105.57)	5/8 (15.88)	11/16 X 7/8 (17.46 X 22.23)	6.5 (2.95)
HVCS18805	5	2515 MCM 76/19 ACSR (1.880)	5-17/32 (138.91)	2 (50.80)	6-1/4 (158.75)	4-5/32 (105.57)	5/8 (15.88)	11/16 X 7/8 (17.46 X 22.23)	6.5 (2.95)
HVCS19965	5	3000 MCM ALUM. (1.996)	5-17/32 (138.91)	2 (50.80)	6-1/4 (158.75)	4-5/32 (105.57)	5/8 (15.88)	11/16 X 7/8 (17.46 X 22.23)	6.5 (2.95)
HVCS21605	5	3500 MCM ALUM. (2.160)	5-17/32 (138.91)	2 (50.80)	6-1/4 (158.75)	4-5/32 (105.57)	5/8 (15.88)	11/16 X 7/8 (17.46 X 22.23)	6.0 (2.72)
HVCS17627	7	2156 MCM 84/19 ACSR (1.762)	7-3/8 (187.33)	2 (50.80)	8-1/2 (215.30)	4-5/32 (105.57)	3/4 (19.05)	13/16 X 1 (20.64 X 25.40)	9.8 (2.45)
HVCS18247	7	2500 MCM ALUM. (1.824)	7-3/8 (187.33)	2 (50.80)	8-1/2 (215.30)	4-5/32 (105.57)	3/4 (19.05)	13/16 X 1 (20.64 X 25.40)	9.8 (2.45)

SUBSTATION BUS SUPPORTS

EHV BOLTED BUS SUPPORTS TYPE HVDCS/EVDCS

ALUMINUM
HVDCS/EVDCS

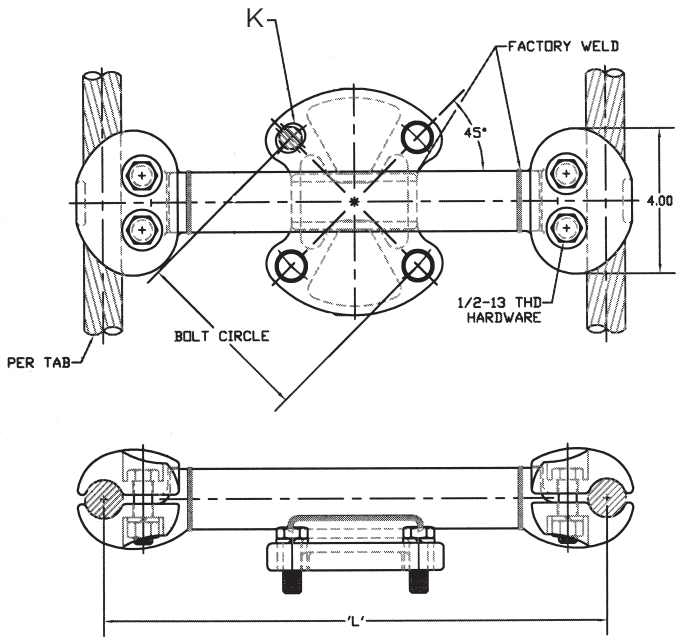

Aluminum alloy, double cable, bus supports are designed for corona free service at 345 and 500 KV respectively. The grooves are fully rounded at entry to prevent conductor damage. Cable spacing other than shown may be ordered by changing catalog number suffix (example HVDCS-1108-5-16 for 1.108 diameter cable at 16" center line to center line).

Material:
Caps and Base – 356-T6 aluminum alloy
Cross Braces – 6061.T6 aluminum alloy
Clamping Bolt – aluminum alloy
Mounting Hardware – galvanized steel

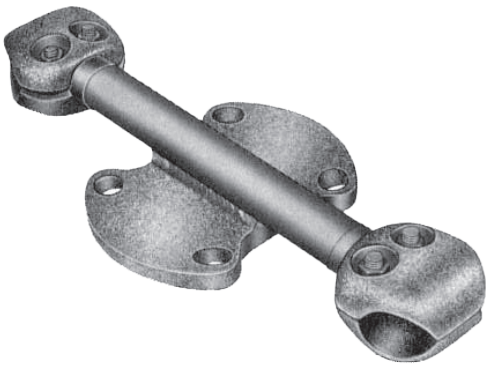

345 kV AND 500 kV LINE-TO-LINE APPLICATIONS

CATALOG NUMBER	ALUMINUM CONDUCTOR RANGE				DIMENSIONS – INCHES (MM)		APPROX. WT EA. LBS. (KG)
	BOLT CIRCLE DIA. IN.	DIA. IN.	AAC	ACSR	L	K	
345 KV APPLICATION							
HVDCS1036512	5	1.019 – 1.036	795 (37-61 Str) 800 (61 Str)	636 30/19 715 54/7	12 (304.80)	11/16 X 7/8 (17.46 X 22.23)	4.8 (2.16)
HVDCS1036518	5	1.019 – 1.036	795 (37-61 Str) 800 (61 Str)	636 30/19 715 54/7	18 (457.20)	11/16 X 7/8 (17.46 X 22.23)	5.2 (2.36)
HVDCS1108518	5	1.070 – 1.108	874.5–900 (37 Str–61 Str)	715.5 30/19 795 54/7	18 (457.20)	11/16 X 7/8 (17.46 X 22.23)	5.2 (2.36)
HVDCS1108712	7	1.070 – 1.108	874.5–900 (37 Str–61 Str)	715.5 30/19 795 54/7	12 (304.80)	13/16 x 1 (20.64 x 25.40)	5.5 (2.49)
HVDCS1108718	7	1.070 – 1.108	874.5–900 (37 Str–61 Str)	715.5 30/19 795 54/7	18 (457.20)	13/16 X 1 (20.64 X 25.40)	6.1 (2.75)
HVDCS1162712	7	1.124 – 1.162	954–1000 (37 Str–61 Str)	900 45/7 900 54/7	12 (304.80)	13/16 X 1 (20.64 X 25.40)	5.5 (2.49)
HVDCS1196510	5	1.165 – 1.196	1033.5 (37 Str–61 Str)	954 45/7 954 54/7	10	11/16 X 7/8 (17.46 X 22.23)	4.6 (2.07)
HVDCS1196512	5	1.165 – 1.196	1033.5 (37 Str–61 Str)	954 45/7 954 54/7	12 (304.80)	11/16 X 7/8 (17.46 X 22.23)	4.8 (2.16)
HVDCS1196518	5	1.165 – 1.196	1033.5 (37 Str–61 Str)	954 45/7 954 54/7	18 (457.20)	11/16 X 7/8 (17.46 X 22.23)	5.2 (2.36)
HVDCS1196712	7	1.165 – 1.196	1033.5 (37 Str–61 Str)	954 45/7 954 54/7	12 (304.80)	13/16 X 1 (20.64 X 25.40)	6.1 (2.75)
HVDCS1246512	5	1.209 – 1.263	1100–1200 (91 Str)	1033.5 45/7 1113 45/7	12 (304.80)	11/16 X 7/8 (17.46 X 22.23)	4.8 (2.16)
HVDCS1246518	5	1.209 – 1.263	1100–1200 (91 Str)	1033.5 45/7 1113 45/7	18 (457.20)	11/16 X 7/8 (17.46 X 22.23)	5.5 (2.49)

Continued on next page.

EHV BOLTED BUS SUPPORTS TYPE HVDCS/EVDCS (CONTINUED)

345 kV AND 500 kV LINE-TO-LINE APPLICATIONS

CATALOG NUMBER	ALUMINUM CONDUCTOR RANGE				DIMENSIONS – INCHES (MM)		APPROX. WT EA. LBS. (KG)
	BOLT CIRCLE DIA. IN.	DIA. IN.	AAC	ACSR	L	K	
345 KV APPLICATION (CONT.)							
HVDCS1299512	5	1.258 – 1.300	1192.5–1272 (61 Str)	1113 45/7 1113 54/19	12 (304.80)	11/16 X 7/8 (17.46 X 22.23)	4.9 (2.22)
HVDCS1299518	5	1.258 – 1.300	1192.5–1272 (61 Str)	1113 45/7 1113 54/19	18 (457.20)	11/16 X 7/8 (17.46 X 22.23)	5.4 (2.45)
HVDCS1299718	7	1.258 – 1.300	1192.5–1272 (61 Str)	1113 45/7 1113 54/19	18 (457.20)	13/16 X 1 (20.64 X 25.40)	6.3 (2.86)
HVDCS1382512	5	1.345 – 1.385	1400–1431 (91 Str–61 Str)	1272 45/7 1351.5 45/7	12 (304.80)	11/16 X 7/8 (17.46 X 22.23)	4.9 (2.22)
HVDCS1465512	5	1.412 – 1.466	1500–1600 (91 Str–127 Str)	1351.5 54/19 1510.5 45/7	12 (304.80)	11/16 X 7/8 (17.46 X 22.23)	4.9 (2.22)
HVDCS1465518	5	1.412 – 1.466	1500–1600 (91 Str–127 Str)	1351.5 54/19 1510.5 45/7	18 (457.20)	11/16 X 7/8 (17.46 X 22.23)	5.2 (2.36)
HVDCS1465718	7	1.412 – 1.466	1500–1600 (91 Str–127 Str)	1351.5 54/19 1510.5 45/7	18 (457.20)	13/16 X 1 (20.64 X 25.40)	5.7 (2.57)
HVDCS1502512	5	1.467 – 1.502	–	1590 45/7	12 (304.80)	11/16 X 7/8 (17.46 X 22.23)	4.9 (2.22)
HVDCS1545510	5	1.502 – 1.545	1700–1750 (127 Str)	1590 45/7 1590 54/19	10 (254.00)	11/16 X 7/8 (17.46 X 22.23)	4.8 (2.16)
HVDCS1545512	5	1.502 – 1.545	1700–1750 (127 Str)	1590 45/7 1590 54/19	12 (304.80)	11/16 X 7/8 (17.46 X 22.23)	4.9 (2.22)
HVDCS1545516	5	1.502 – 1.545	1700–1750 (127 Str)	1590 45/7 1590 54/19	16 (406.40)	11/16 X 7/8 (17.46 X 22.23)	5.1 (2.30)
HVDCS1545518	5	1.502 – 1.545	1700–1750 (127 Str)	1590 45/7 1590 54/19	18 (457.20)	11/16 X 7/8 (17.46 X 22.23)	5.3 (2.39)
500 KV APPLICATION							
EVDCS1650512	5	1.602 – 1.650	2000 (91 Str–127 Str.)	1780 84/19	12 (304.80)	11/16 X 7/8 (17.46 X 22.23)	5.0 (2.25)
EVDCS1650518	5	1.602 – 1.650	2000 (91 Str–127 Str.)	1780 84/19	18 (457.20)	11/16 X 7/8 (17.46 X 22.23)	5.4 (2.45)
EVDCS1729512	5	1.682 – 1.729	2250 (91 Str.)	-	12 (304.80)	11/16 X 7/8 (17.46 X 22.23)	5.0 (2.25)
EVDCS1729518	5	1.682 – 1.729	2250 (91 Str.)	-	18 (457.20)	11/16 X 7/8 (17.46 X 22.23)	5.4 (2.45)
EVDCS1762512	5	1.737 – 1.762	2300 (61 Str.)	2167 72/7 2156 84/19	12 (304.80)	11/16 X 7/8 (17.46 X 22.23)	5.0 (2.25)
EVDCS1762518	5	1.737 – 1.762	2300 (61 Str.)	2167 72/7 2156 84/19	18 (457.20)	11/16 X 7/8 (17.46 X 22.23)	5.4 (2.45)
EVDCS1762712	7	1.737 – 1.762	2300 (61 Str.)	2167 72/7 2156 84/19	12 (304.80)	13/16 X 1 (20.64 X 25.40)	5.8 (2.61)
EVDCS1824512	5	1.763 – 1.824	2500 (91 Str–127 Str)	-	12 (304.80)	11/16 X 7/8 (17.46 X 22.23)	5.0 (2.27)
EVDCS1824516	5	1.763 – 1.824	2500 (91 Str–127 Str)	-	16 (406.40)	11/16 X 7/8 (17.46 X 22.23)	5.2 (2.36)
EVDCS1824518	5	1.763 – 1.824	2500 (91 Str–127 Str)	-	18 (457.20)	11/16 X 7/8 (17.46 X 22.23)	5.4 (2.75)
EVDCS1824712	7	1.763 – 1.824	2500 (91 Str–127 Str)	-	12 (304.80)	13/16 X 1 (20.64 X 25.40)	5.8 (2.61)
EVDCS1824716	7	1.763 – 1.824	2500 (91 Str–127 Str)	-	16 (406.40)	13/16 X 1 (20.64 X 25.40)	6.1 (2.75)
EVDCS1824718	7	1.763 – 1.824	2500 (91 Str–127 Str)	-	18 (457.20)	13/16 X 1 (20.64 X 25.40)	6.3 (2.86)

SUBSTATION BUS SUPPORTS

EHV BOLTED BUS SUPPORTS TYPE HVDCH/EVDCH

ALUMINUM
HVDCH/EVDCH

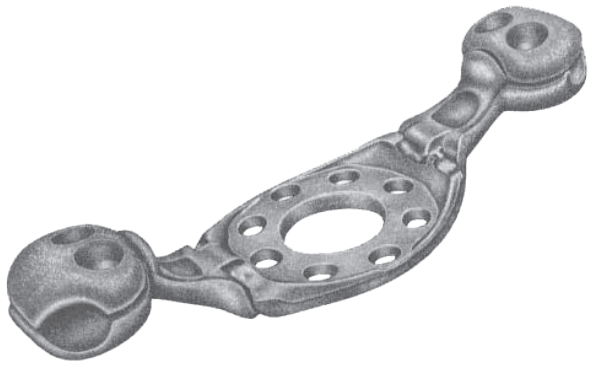

Aluminum alloy, double cable, bus supports are designed for corona free service at 345 and 500 KV respectively. The rigid cast design has cable grooves fully rounded at entry to prevent conductor damage.

Material: **Body and Caps** – 356-T6 aluminum alloy
Clamping Hardware – aluminum alloy
Mounting Hardware – galvanized steel

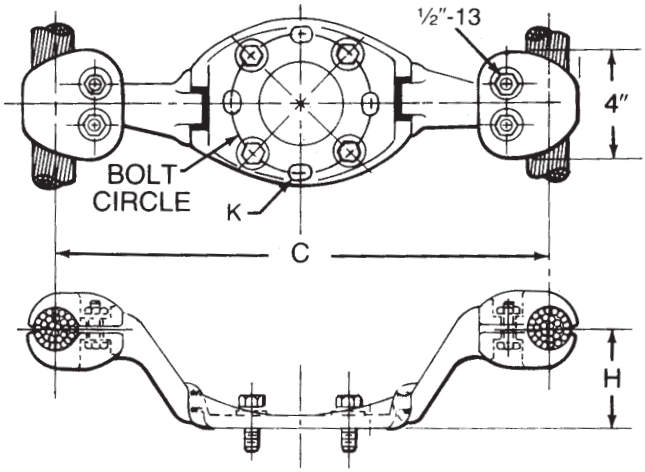

345 kV AND 500 kV LINE-TO-LINE APPLICATIONS

CATALOG NUMBER	ALUMINUM CONDUCTOR RANGE				DIMENSIONS–INCHES (MM)			APPROX. WT. EA. LBS. (KG)
	BOLT CIRCLE DIA. IN.	DIA. IN	AAL	ACSR	C	H	K	
345 KV APPLICATIONS								
HVDCH1108518	5	1.070 – 1.108	874.5–900 (37 Str–61 Str)	715.5 (30/19) – 795 (54/7)	18 (457.20)	2-1/2 (63.50)	11/16 X 7/8 (17.46 X 22.23)	5.2 (2.36)
HVDCH1196518	5	1.165 – 1.196	1033.5 (37 Str–61 Str)	954 (45/7) – 954 (54/7)	18 (457.20)	2-1/2 (63.50)	11/16 X 7/8 (17.46 X 22.23)	5.2 (2.36)
HVDCH1299518	5	1.258 – 1.300	1192.5–1272 (61 Str)	1113 (45/7) – 1113 (54/19)	18 (457.20)	2-1/2 (63.50)	11/16 X 7/8 (17.46 X 22.23)	5.4 (2.45)
HVDCH1382518	5	1.345 – 1.385	1400–1431 (91 Str–61 Str)	1272 (45/7) – 1351.5 (45/7)	18 (457.20)	2-1/2 (63.50)	11/16 X 7/8 (17.46 X 22.23)	5.2 (2.36)
HVDCH1545518	5	1.502 – 1.545	1700–1750 (127 Str)	-	18 (457.20)	2-1/2 (63.50)	11/16 X 7/8 (17.46 X 22.23)	5.2 (2.36)
500 KV APPLICATION								
EVDCH1650518	5	1.602 – 1.650 (40.69 – 41.91)	2000–2000 (91 Str–127 Str)	1780 (84/19)	18 (457.20)	2-1/2 (63.50)	11/16 X 7/8 (17.46 X 22.23)	5.9 (2.68)
EVDCH1762518	5	1.737 – 1.762 (44.12 – 44.75)	-	2167 (72/7) – 2156 (84/19)	18 (457.20)	2-1/2 (63.50)	11/16 X 7/8 (17.46 X 22.23)	5.7 (2.59)

SUBSTATION BUS SUPPORTS

EHV WELDED BUS SUPPORTS TYPE WURE-EHV

ALUMINUM
WURE-EHV

Aluminum alloy weldment, rigid or slip fit, bus supports are designed for corona free service at 345 KV. If rigid fit is desired, field weld each end. Stainless steel static eliminator spring is furnished as standard. Cap screws and washers for mounting to cap of insulator are supplied for upright mounting; when mounting to base, add "B" to catalog number (example: WURE-20-5-B-EHV).

Material: **Casting** – 356-T6 aluminum alloy
Mounting Hardware – galvanized steel

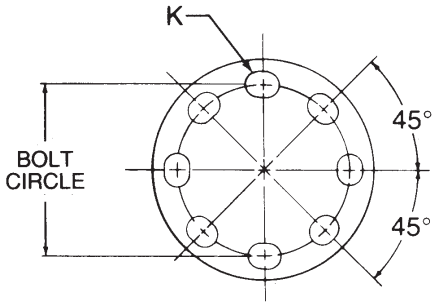

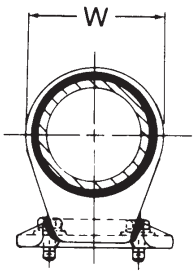

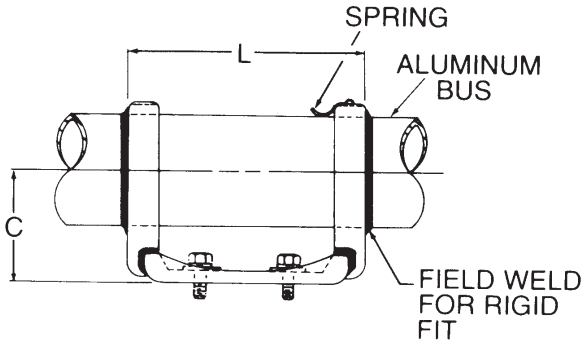

345 kV AND 500 kV LINE-TO-LINE APPLICATIONS

CATALOG NUMBER	ALUMINUM CONDUCTOR SIZE IPS/EHIPS	BOLT CIRCLE DIA. IN.	DIMENSIONS – INCHES (MM)				APPROX. WT. EA. LBS. (KG)
			L	C	W	K	
WURE245EHV	2-1/2	5	9-1/8 (231.78)	3-1/8 (79.38)	3-11/16 (93.66)	11/16 X 7/8 (17.46 X 22.23)	3.4 (1.54)
WURE305EHV	3	5	9-1/8 (231.78)	3-5/8 (92.08)	4-7/16 (112.71)	11/16 X 7/8 (17.46 X 22.23)	3.4 (1.54)
WURE345EHV	3-1/2	5	9-1/8 (231.78)	4 (101.60)	5-3/16 (131.76)	11/16 X 7/8 (17.46 X 22.23)	4.7 (2.13)
WURE405EHV	4	5	9-3/8 (238.13)	41/2 (114.30)	5-9/16 (141.25)	11/16 X 7/8 (17.46 X 22.23)	5.3 (2.40)
WURE505EHV	5	5	9-3/8 (238.13)	4-7/8 (123.83)	6-11/16 (169.86)	11/16 X 7/8 (17.46 X 22.23)	5.8 (2.63)
WURE605EHV	6	5	9-7/8 (250.83)	5-3/8 (136.53)	7-11/16 (195.26)	11/16 X 7/8 (17.46 X 22.23)	6.7 (3.04)

SUBSTATION BUS SUPPORTS

EHV HOOK-ON BUS SUPPORTS TYPE WTH-EHV

ALUMINUM
WTH-EHV

Aluminum alloy weldment bus supports are corona free hook-on type tubular supports for 345 and 500 KV service. The bus supports can be welded at each end for rigid fit. Stainless steel static eliminator springs are furnished as standard. Cap screws and washers for mounting to cap of insulator are supplied for upright mounting. When mounting to base of insulator, add "B" to catalog number for bolts, nuts, lockwashers and flatwashers (example: WTH-24-5-B-EHV).

Material: **Casting** – 356-T6 aluminum alloy
Mounting Hardware – galvanized steel

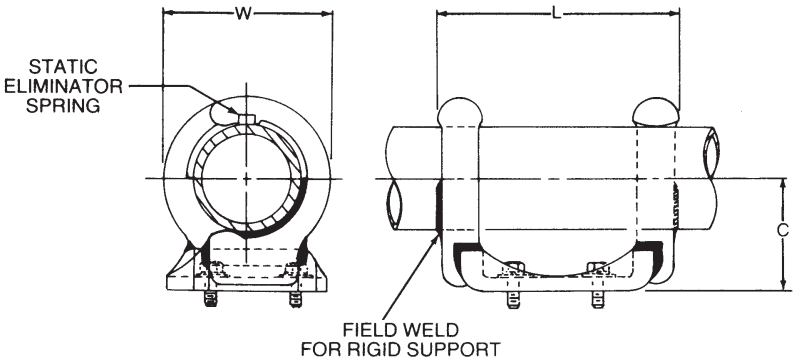

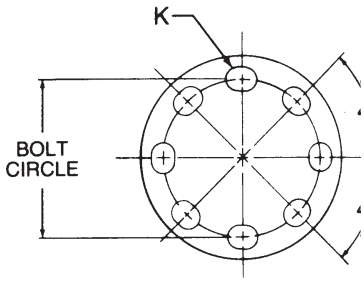

345 kV AND 500 kV LINE-TO-LINE APPLICATIONS

CATALOG NUMBER	ALUMINUM CONDUCTOR SIZE IPS/EHIPS	DIMENSIONS – INCHES (MM)				APPROX. WT. EA. LBS. (KG)
		L	C	W	K	
5" BOLT CIRCLE						
WTH205EHV	2	9-3/8 (238.13)	2-3/4 (69.85)	4 (101.6)	11/16 X 7/8 (17.46 X 22.23)	3.7 (1.67)
WTH245EHV	2-1/2	9-3/8 (238.13)	3-1/8 (79.38)	4-1/2 (114.30)	11/16 X 7/8 (17.46 X 22.23)	4.1 (1.81)
WTH305EHV	3	9-3/8 (238.13)	3-5/8 (92.08)	5-1/2 (139.70)	11/16 X 7/8 (17.46 X 22.23)	4.1 (1.81)
WTH345EHV	3-1/2	9-3/8 (238.13)	4 (101.60)	5-7/8 (149.23)	11/16 X 7/8 (17.46 X 22.23)	4.3 (1.93)
WTH405EHV	4	9-3/8 (238.13)	4-1/2 (114.30)	6-1/2 (165.10)	11/16 X 7/8 (17.46 X 22.23)	4.3 (1.95)
WTH505EHV	5	9-3/8 (238.13)	4-7/8 (123.83)	7-13/16 (198.44)	11/16 X 7/8 (17.46 X 22.23)	5.0 (2.27)
WTH605EHV	6	9-3/8 (238.13)	5-3/8 (136.53)	9-1/8 (231.78)	11/16 X 7/8 (17.46 X 22.23)	5.6 (2.54)
7" BOLT CIRCLE						
WTH307EHV	3	11-3/4 (298.45)	3-5/8 (92.08)	5-1/2 (139.70)	13/16 X 1 (20.64 X 25.40)	5.5 (2.48)
WTH407EHV	4	11-3/4 (298.45)	4-1/2 (114.30)	6-1/2 (165.10)	13/16 X 1 (20.64 X 25.40)	5.7 (2.59)
WTH507EHV	5	11-3/4 (298.45)	4-7/8 (123.83)	7-13/16 (198.44)	13/16 X 1 (20.64 X 25.40)	5.7 (2.59)
WTH607EHV	6	11-3/4 (298.45)	5-3/8 (136.53)	9-1/8 (231.78)	13/16 X 1 (20.64 X 25.40)	7.0 (3.18)

SUBSTATION BUS SUPPORTS

EHV WELDED BUS SUPPORTS TYPE WUR-EHV

ALUMINUM
WUR-EHV

Aluminum alloy horizontal weldment bus support for aluminum tubing designed for rigid corona free service at 345 and 500 KV. Cap screws are supplied for upright mounting.

For mounting to base of insulator; nuts, bolts, and lock-washers will be supplied by adding "-B" to catalog number; example: WUR-30-5-B-EHV

Material: **Casting** – 356-T6 aluminum alloy
Hardware – galvanized steel

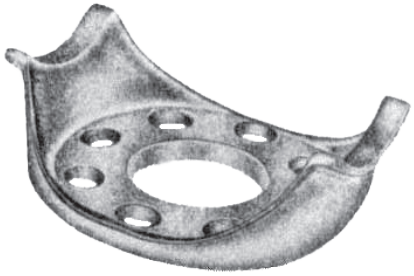

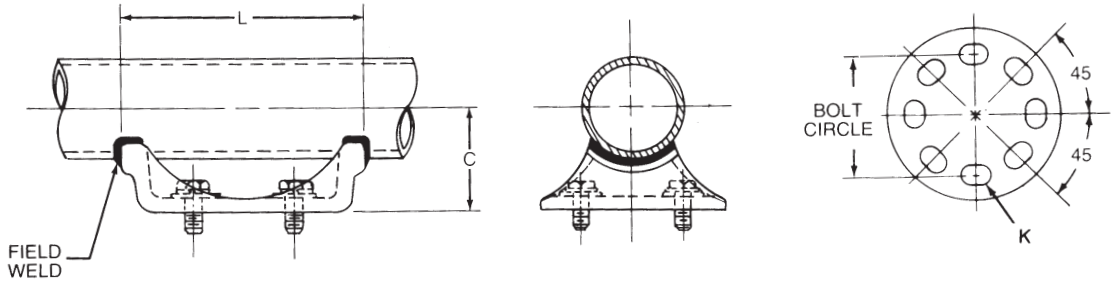

345 kV AND 500 kV LINE-TO-LINE APPLICATIONS

CATALOG NUMBER	ALUMINUM CONDUCTOR SIZE IPS/EHIPS	BOLT CIRCLE DIA. IN.	DIMENSIONS – INCHES (MM)			APPROX. WT. EA. LBS. (KG)
			L	C	K	
WUR245EHV	2-1/2	5	8 (203.20)	3-1/8 (79.38)	11/16 X 7/8 (17.46 X 22.23)	1.30 (.59)
WUR305EHV	3	5	8-1/8 (206.38)	3-5/8 (92.08)	11/16 X 7/8 (17.46 X 22.23)	1.40 (.63)
WUR345EHV	3-1/2	5	8-1/8 (206.38)	4 (101.60)	11/16 X 7/8 (17.46 X 22.23)	1.60 (.72)
WUR405EHV	4	5	8-1/8 (206.38)	4-1/2 (114.30)	11/16 X 7/8 (17.46 X 22.23)	1.80 (.81)
WUR505EHV	5	5	8-1/8 (206.38)	4-7/8 (123.82)	11/16 X 7/8 (17.46 X 22.23)	1.90 (.86)
WUR605EHV	6	5	8-1/8 (206.38)	5-3/8 (136.52)	11/16 X 7/8 (17.46 X 22.23)	2.06 (.93)
WUR607EHV	6	7	10-3/8 (263.53)	5-1/2 (139.70)	13/16 X 1 (20.64 X 25.40)	2.94 (1.33)

EHV BUS SUPPORTS
TYPE EVBCF

ALUMINUM
EVBCF

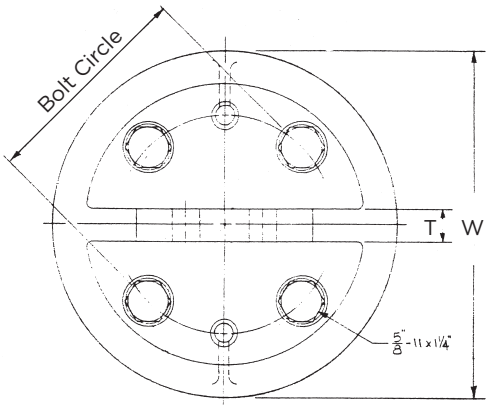

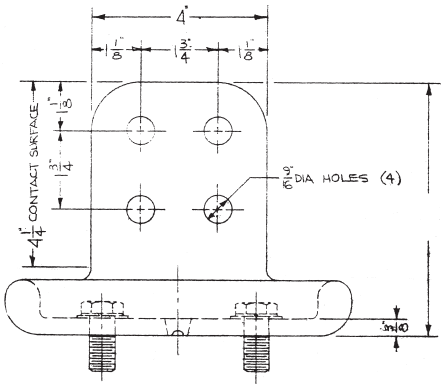

Aluminum alloy, insulator to flat, terminals are designed for corona free service at 500KV. *This catalog number does not include tongue mounting hardware or bolt shields;* these components must be ordered separately. Bolt shields must be used on both sides of pad to assure corona free performance. Tongue holes have NEMA spacing. Contact sealant is recommended.

Material: **Castings** – 356-T6 aluminum alloy
Clamping Hardware – Galvanized Steel

345 kV AND 500 kV LINE-TO-LINE APPLICATIONS

CATALOG NUMBER	BOLT CIRCLE DIA. IN.	DIMENSIONS – INCHES (MM)			APPROX. WT. EA. LBS. (KG)
		H	W	T	
EVBCF	5	5-3/4 (146.1)	6-3/8 (161.9)	3/4 (19.05)	5.4 (2.45)

SUBSTATION BUS SUPPORTS

EHV WELDED BUS SUPPORTS TYPE EVVBS

ALUMINUM
EVVBS

Aluminum alloy weldment bus supports are corona free vertical tubular supports for 500 kV service. For schedule 40 Bus [1].

Material: **Bus Support** – 356-T6 aluminum alloy
Hardware – galvanized steel

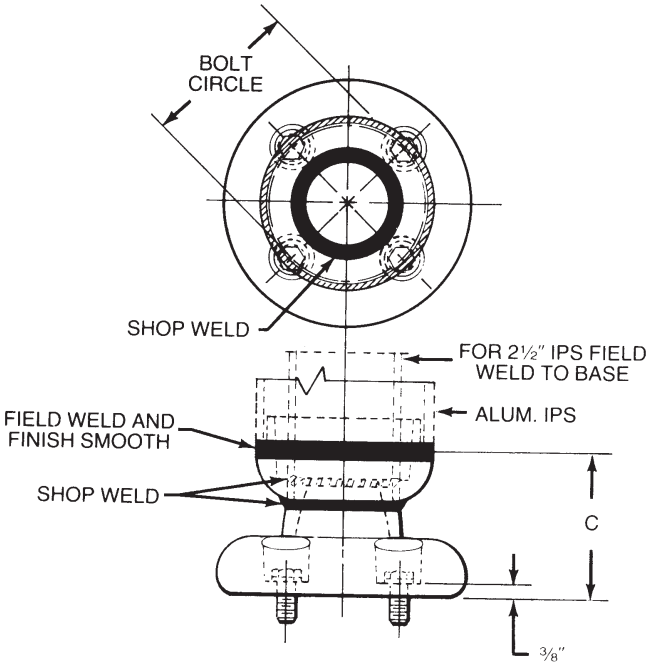

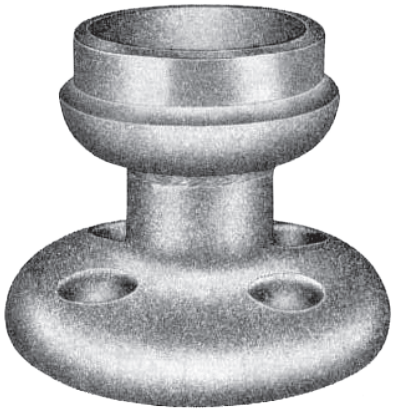

345 kV AND 500 kV LINE-TO-LINE APPLICATIONS

CATALOG NUMBER	ALUMINUM CONDUCTOR SIZE IPS	BOLT CIRCLE DIA. IN.	DIMENSION – INCHES (MM) C	APPROX. WT. EA. LBS. (KG)
EVVBS245	2-1/2	5	3-15/16 (100.01)	5.3 (2.41)
EVVBS305	3	5	5-7/16 (138.11)	6.4 (2.90)
EVVBS405	4	5	5-1/2 (139.70)	7.2 (3.27)
EVVBS505	5	5	5-1/2 (139.70)	7.7 (3.49)
EVVBS605	6	5	5-1/2 (139.70)	8.2 (3.72)
EVVBS247	2-1/2	7	3-15/16 (100.01)	5.9 (2.68)
EVVBS307	3	7	5-7/16 (138.11)	6.9 (3.13)
EVVBS407	4	7	5-7/16 (138.11)	7.9 (3.58)
EVVBS507	5	7	5-1/2 (139.80)	-
EVVBS607	6	7	5-1/2 (139.80)	-

[1] Some sizes available for schedule 80 bus – consult factory.

EHV EXPANSION TUBULAR BUS SUPPORT TYPE HVRTS

ALUMINUM
HVRTS

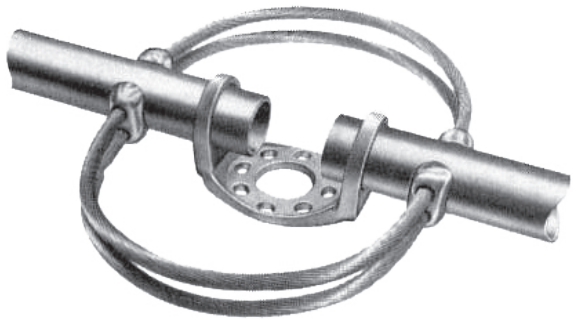

Aluminum alloy weldment, expansion tubular, bus support-coupler is designed for corona free service at 345 KV. The cables serve as the expansion part of the fitting as well as the corona rings. Weldment end plugs will be furnished if desired by adding "EP" suffix to catalog number; example: HVRTS-40-5-EP.

Material: **Castings** – 356-T6 aluminum alloy
Cables – aluminum alloy
Hardware – galvanized steel

Refer to Class 3940 for installation chart DC-11852 on page 89 for instructions.

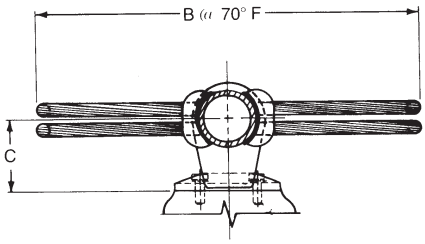

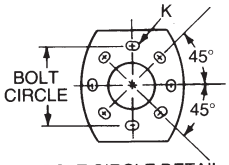

BOLT CIRCLE DETAIL

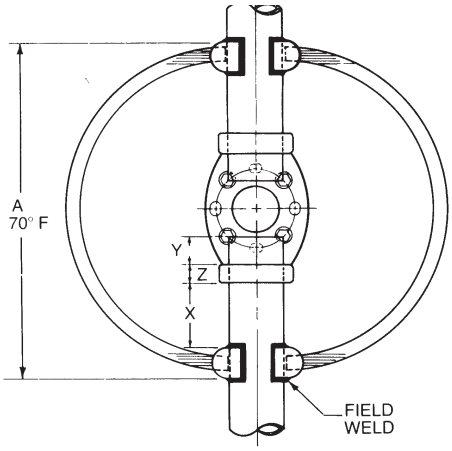

345 kV AND 500 kV LINE-TO-LINE APPLICATIONS

CATALOG NUMBER	ALUMINUM CONDUCTOR SIZE IPS/ EHIPS	BOLT CIRCLE DIA. IN.	DIMENSIONS – INCHES (MM)					APPROX. WT. EA. LBS. (KG)
			A	B	C	K	Z	
HVRTS305	3	5	20-5/8 (523.88)	24-1/8 (612.78)	3-5/8 (92.08)	11/16 X 7/8 (17.46 X 22.23)	13/16 (20.64)	16.2 (7.35)
HVRTS345	3-1/2	5	20-5/8 (523.88)	24-1/8 (612.78)	4 (101.60)	11/16 X 7/8 (17.46 X 22.23)	1 (25.40)	16.8 (7.62)
HVRTS405	4	5	20-7/8 (530.23)	25-1/8 (638.18)	4-1/2 (114.30)	11/16 X 7/8 (17.46 X 22.23)	1-1/4 (31.75)	17.8 (8.08)
HVRTS505	5	5	22-3/8 (568.33)	26-3/4 (679.45)	4-7/8 (123.83)	11/16 X 7/8 (17.46 X 22.23)	1-1/4 (31.75)	20.1 (9.13)
HVRTS605	6	5	22-7/8 (581.03)	27-7/8 (708.03)	5-3/8 (136.53)	11/16 X 7/8 (17.46 X 22.23)	1-1/2 (38.10)	21.0 (9.53)
HVRTS307	3	7	20-3/4 (527.05)	24-1/8 (612.78)	3-5/8 (92.08)	13/16 X 1 (20.64 X 25.40)	13/16 (20.64)	17.5 (7.95)
HVRTS407	4	7	21 (533.40)	25-1/8 (638.18)	4-1/2 (114.30)	13/16 X 1 (20.64 X 25.40)	1-1/4 (31.75)	19.6 (8.90)
HVRTS507	5	7	22-1/2 (571.50)	26-3/4 (679.45)	4-7/8 (123.83)	13/16 X 1 (20.64 X 25.40)	1-1/4 (31.75)	21.7 (9.85)
HVRTS607	6	7	23 (584.20)	27-7/8 (708.03)	5-3/8 (136.53)	13/16X 1 (20.64 X 25.40)	1-1/2 (38.10)	22.8 (10.35)

EHV WELDED EXPANSION TUBULAR BUS SUPPORTS TYPE EVKES

ALUMINUM

EVKES

Aluminum alloy, compact expansion, horizontal bus supports are designed for corona free service at 500 KV. This design provides 32 inch expansion. Weldment end plugs will be furnished if desired by adding "EP" suffix to catalog number; example: (EVKES-40-5-EP). Specify "H" in catalog number if schedule 80 EHIPS tubing is to be used: example: (EVKESH-40-5).

Material: **Casting** – 356-T6 aluminum alloy
Shunts – 1100-0 aluminum alloy
Shield Mounting Hardware – stainless steel
Base Mounting Hardware – galvanized steel

Refer to installation chart DC-6536 on page SD-9 for instructions.

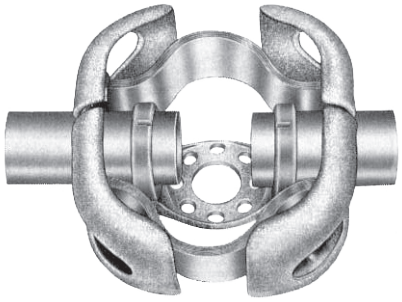

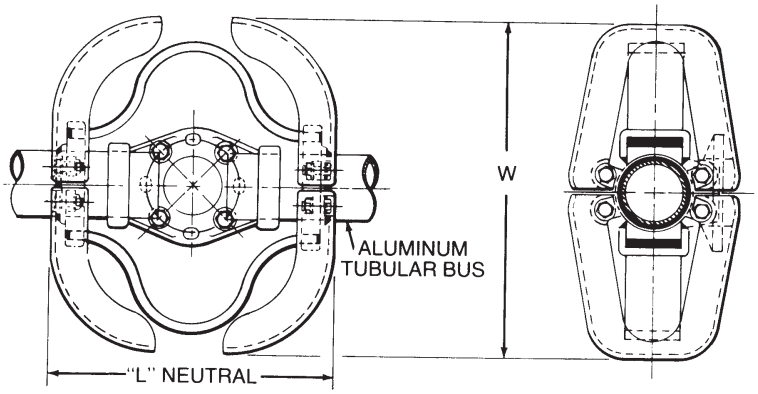

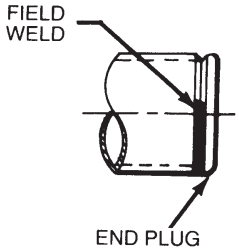

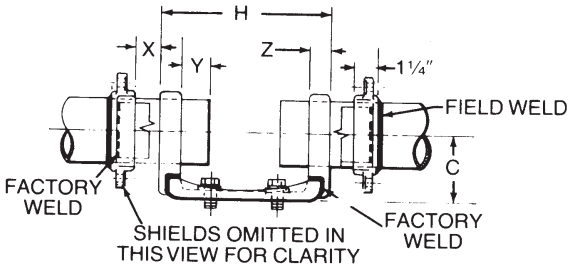

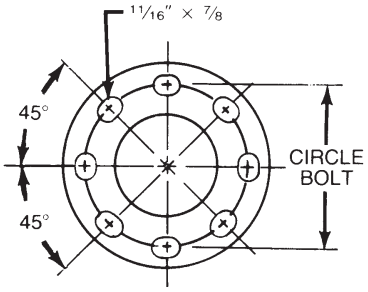

345 kV AND 500 kV LINE-TO-LINE APPLICATIONS

CATALOG NUMBER	ALUMINUM◊◊ CONDUCTOR SIZE IPS	BOLT CIRCLE DIA. IN.	DIMENSIONS – INCHES (MM)					APPROX. WT. EA. LBS. (KG)
			L	C	H	Z	W	
EVKES305	3	5	15-1/4 (387.35)	3-5/8 (92.08)	9-1/8 (231.78)	1 (25.40)	18-1/2 (469.90)	20.8 (9.43)
EVKES345	3-1/2	5	15-1/4 (387.35)	4 (101.6)	9-1/8 (231.78)	1 (25.40)	19-1/2 (495.30)	27.3 (12.38)
EVKES405	4	5	15-1/2 (393.70)	4-1/2 (114.30)	9-3/8 (238.13)	1-1/4 (31.75)	19-1/2 (495.30)	28.3 (12.84)
EVKES505	5	5	15-1/2 (393.70)	4-7/8 (123.83)	9-3/8 (238.13)	1-1/4 (31.75)	23-1/2 (596.90)	32.9 (14.92)
EVKES605	6	5	16 (406.40)	5-3/8 (136.53)	9-7/8 (250.83)	1-1/2 (38.10)	23-1/2 (596.90)	41.8 (18.96)

◊◊160 ft. maximum total bus length.

SUBSTATION BUS SUPPORTS

EHV EXPANSION TUBULAR BUS SUPPORTS TYPE HVETS/EVETS

ALUMINUM
HVETS/EVETS

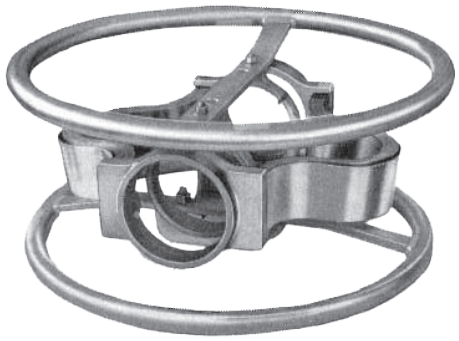

Aluminum alloy weldment, expansion tubular, bus support couplers designed for corona free service at 345 or 500 KV level respectively. Weldment end plugs will be furnished if desired; add "-EP" to catalog number. (Example: HVETS-40-5-EP). Specify "H" in catalog number if schedule 80 EHIPS tubing is to be used: example: (HVETSH-40-5).

Material:
- **Casting** – 356-T6 aluminum alloy
- **Rings** – 6061-T6 aluminum alloy
- **Shunts** – 1100-0 aluminum alloy
- **Ring Mounting Brackets** – 6061-T6 aluminum alloy
- **Upper Ring Mounting Hardware** – aluminum alloy
- **Lower Ring and Base Mounting Hardware** – galvanized steel

Refer to installation Chart DC-6536 on page 90 for instructions.

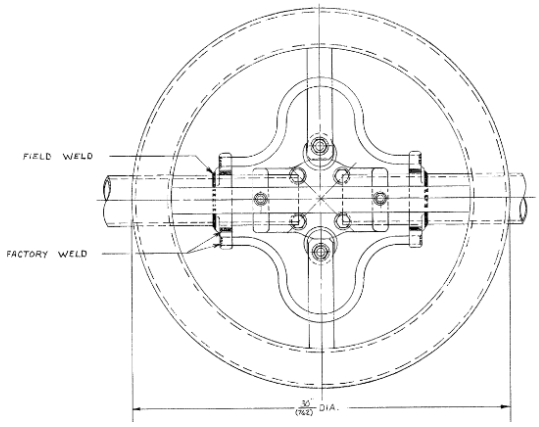

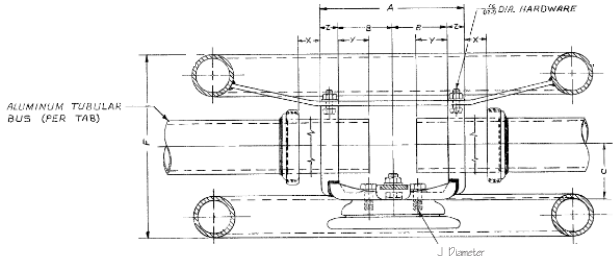

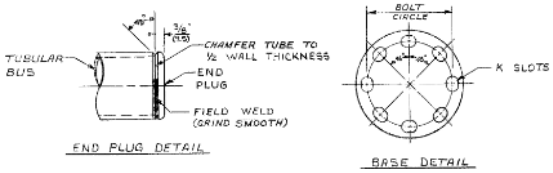

EHV 54

345 kV AND 500 kV LINE-TO-LINE APPLICATIONS

CATALOG NUMBER	ALUMINUM CONDUCTOR SIZE IPS	BOLT CIRCLE DIA. IN.	DIMENSIONS – INCHES (MM)							APPROX. WT. EA. LBS. (KG)
			A	B	C	F	J	K	Z	
345 KV APPLICATIONS										
HVETS305♦	3	5	9-3/8 (238.13)	3-7/16 (87.31)	3-5/8 (92.08)	10-3/8 (263.53)	5/8 (15.88)	11/16 X 7/8 (17.46 X 22.23)	1-1/4 (31.75)	25.6 (11.61)
HVETS345♦	3-1/2	5	9-3/8 (238.13)	3-7/16 (87.31)	4 (101.60)	11 (279.40)	5/8 (15.88)	11/16 X 7/8 (17.46 X 22.23)	1-1/4 (31.75)	34.9 (15.83)
HVETS405♦	4	5	9-3/8 (238.13)	3-7/16 (87.31)	4-1/2 (114.30)	11-3/4 (298.45)	5/8 (15.88)	11/16 X 7/8 (17.46 X 22.23)	1-1/4 (31.75)	32.8 (14.88)
HVETS505♦	5	5	9-3/8 (238.13)	3-7/16 (87.31)	4-7/8 (123.83)	12-3/4 (323.85)	5/8 (15.88)	11/16 X 7/8 (17.46 X 22.23)	1-1/4 (31.75)	36.1 (16.37)
HVETS605♦	6	5	9-3/8 (238.13)	3-7/16 (87.31)	5-3/8 (136.53)	13-3/4 (349.25)	5/8 (15.88)	11/16 X 7/8 (17.46 X 22.23)	1-1/2 (38.10)	45.7 (20.73)

♦ 3 21/8" expansion, 160 ft. maximum total bus length (both sides).
♦♦ 3 3" expansion, 240 ft. maximum total bus length (both sides).

Continued on next page.

TYPES HVETS/EVETS EXPANSION TUBULAR BUS SUPPORTS (CONTINUED)

345 kV AND 500 kV LINE-TO-LINE APPLICATIONS

CATALOG NUMBER	ALUMINUM CONDUCTOR SIZE IPS	BOLT CIRCLE DIA. IN.	DIMENSIONS – INCHES (MM)							APPROX. WT. EA. LBS. (KG)
			A	B	C	F	J	K	Z	
HVETS507♦♦	5	7	11-3/4 (298.45)	4-5/8 (117.48)	4-7/8 (123.83)	12-3/4 (323.85)	3/4 (19.05)	13/16 X 7/8 (20.64 X 25.40)	1-1/4 (31.75)	39.0 (17.69)
HVETS607♦♦	6	7	12-1/4 (311.15)	4-5/8 (117.48)	5-3/8 (136.53)	13-3/4 (349.25)	3/4 (19.05)	13/16 X 7/8 (20.64 X 25.40)	1-1/2 (38.10)	53.0 (24.04)
500 KV APPLICATIONS										
EVETS305♦	3	5	9-3/8 (238.13)	3-7/16 (87.31)	3-5/8 (92.08)	11-7/8 (301.63)	5/8 (15.88)	11/16 X 7/8 (17.46 X 22.23)	1-1/4 (31.75)	33.1 (15.01)
EVETS345♦	3-1/2	5	9-3/8 (238.13)	3-7/16 (87.31)	4 (101.60)	12-1/2 (317.50)	5/8 (15.88)	11/16 X 7/8 (17.46 X 22.23)	1-1/4 (31.75)	42.4 (19.37)
EVETS405♦	4	5	9-3/8 (238.13)	3-7/16 (87.31)	4-1/2 (114.30)	13-1/4 (336.55)	5/8 (15.88)	11/16 X 7/8 (17.46 X 22.23)	1-1/4 (31.75)	40.3 (18.28)
EVETS505♦	5	5	9-3/8 (238.13)	3-7/16 (87.31)	4-7/8 (123.83)	14-1/4 (361.95)	5/8 (15.88)	11/16 X 7/8 (17.46 X 22.23)	1-1/4 (31.75)	43.6 (19.78)
EVETS605♦	6	5	9-7/8 (250.83)	3-7/16 (87.31)	5-3/8 (136.53)	15-1/4 (387.35)	5/8 (15.88)	11/16 X 7/8 (17.46 X 22.23)	1-1/2 (38.10)	53.2 (24.13)
EVETS507♦♦	5	7	11-3/4 (298.45)	4-5/8 (117.48)	4-7/8 (123.83)	14-1/4 (361.95)	3/4 (19.05)	13/16 X 7/8 (20.64 X 25.40)	1-1/4 (31.75)	46.5 (21.09)
EVETS607♦♦	6	7	12-1/4 (311.15)	4-5/8 (117.48)	5-3/8 (136.53)	15-1/4 (387.35)	3/4 (19.05)	13/16 X 7/8 (20.64 X 25.40)	1-1/2 (38.10)	60.5 (27.44)

Designed for:
♦ 3 21/8" expansion, 160 ft. maximum total bus length (both sides).
♦♦ 3 3" expansion, 240 ft. maximum total bus length (both sides).

SUBSTATION BUS SUPPORTS

EHV SUSPENSION CLEVIS CLEVIS BUS SUPPORT TYPE HVSCCS

ALUMINUM
HVSCCS

Corona free suspension bus support 3" IPS AL. Tubular bus to two clevis fittings. Corona-free when installed between two close-coupled insulator strings.

Material: **Body** – 356-T6 Aluminum Alloy
Hardware – Stainless Steel
Clevis Pins – Galvanized Steel

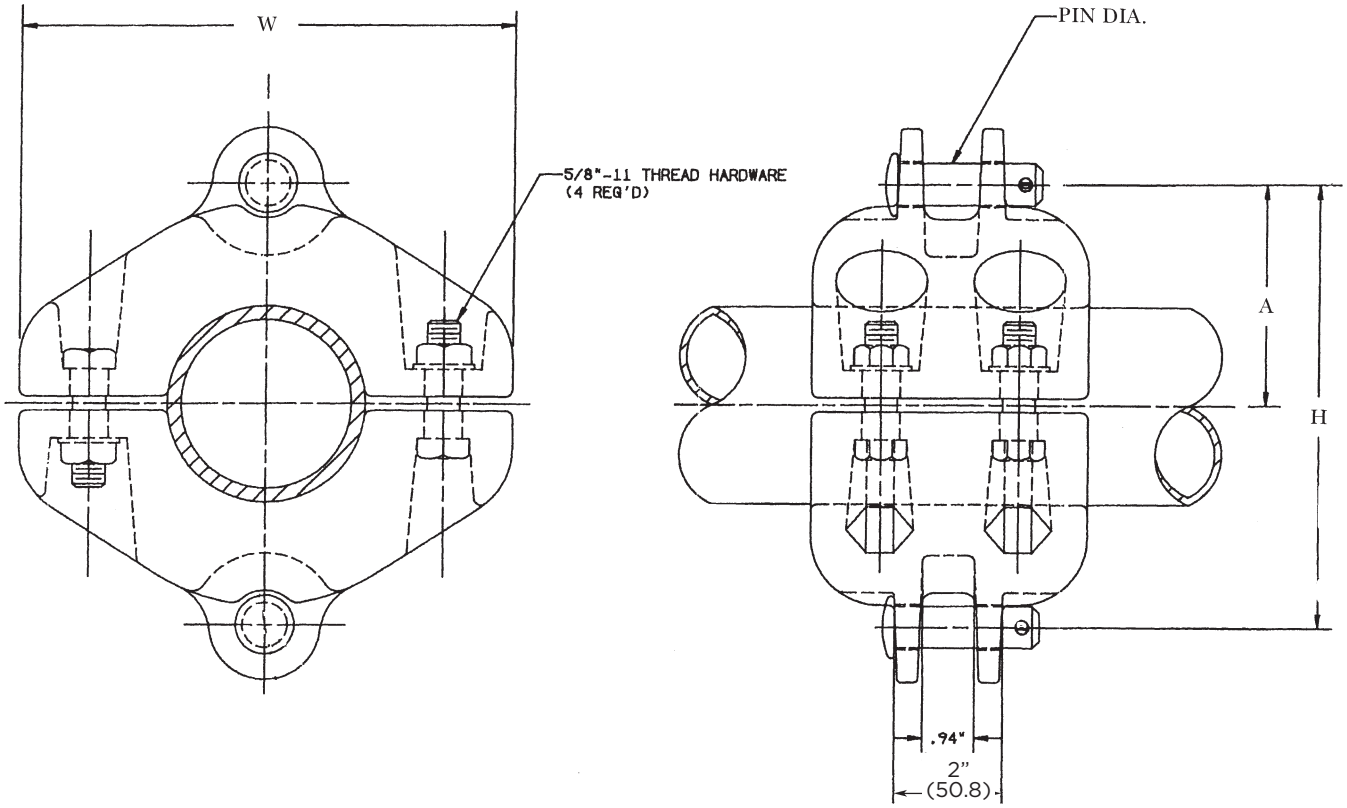

345 kV AND 500 kV LINE-TO-LINE APPLICATIONS

CATALOG NUMBER	ALUMINUM CONDUCTOR SIZE IPS	DIMENSIONS			PIN DIA.	APPROX. WT. EA. LBS. (KG)
		A	H	W		
HVSCCS30	3	4 (101.6)	8 (203.2)	8-7/8 (225.43)	3/4 (19.05)	17.5 (7.95)

EHV DOUBLE MOUNTED TUBULAR BUS SUPPORT TYPE EVT2S

ALUMINUM
EVT2S

Aluminum alloy double mounted tubular bus support, installed between two post insulators, provides a rigid tube fit. The corona free support is used in multi-level tubing runs. May be used with Schedule 40 or Schedule 80 tube.

Materials: **Castings** – 356-T6 Aluminum Alloy
Clamping Hardware – Aluminum Alloy
Mounting Hardware – Galvanized Steel

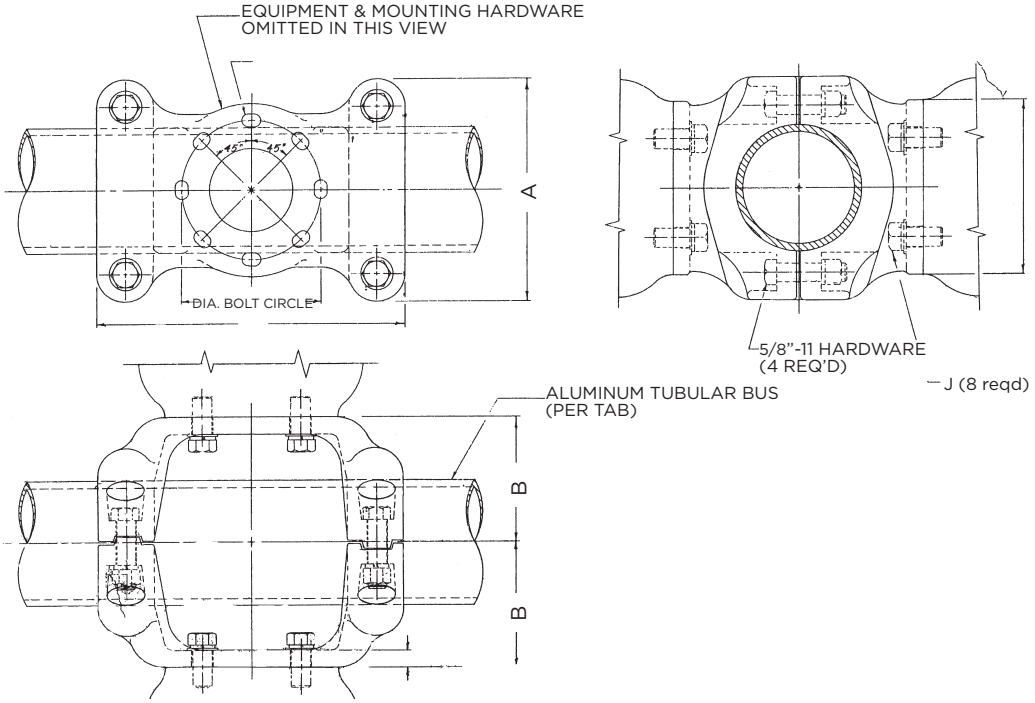

345 kV AND 500 kV LINE-TO-LINE APPLICATIONS

CATALOG NUMBER	ALUMINUM CONDUCTOR SIZE IPS/EHIPS	DIMENSIONS – INCHES (MM)					APPROX. WT. EA. LBS. (KG)
		A	B	C	BOLT CIRCLE	J	
EVT2S405	4	8-1/2 (215.30)	4-1/2 (114.30)	12 (304.80)	5	5/8	12.6 (5.72)
EVT2S505	5	9-1/2 (241.30)	4-7/8 (121.54)	12 (304.80)	5	5/8	13.5 (6.13)

SUBSTATION STUD CONNECTORS

BRONZE BOLTED STUD CONNECTORS TO FLAT PAD WITH HARDWARE SHIELD TYPE BHVSF

BRONZE
BHVSF

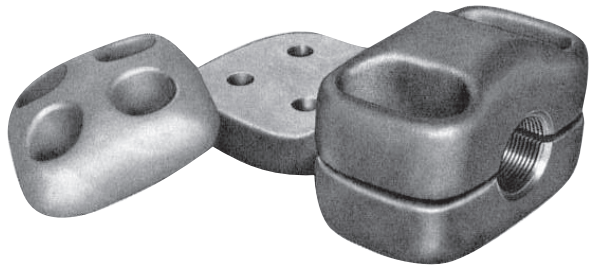

Bronze alloy stud connectors are designed for corona free service at 345 KV. Pad mounting hardware is not furnished as part of this catalog number. One aluminum hardware shield is supplied with this catalog number. Hardware must be ordered separately; specify thickness of pad to be clamped when ordering. This connector may be supplied tin plated by adding "TP" to catalog number (example: BHVSF-20-D-12-TP).

Tongue holes have NEMA spacing.

Material: **Castings** – 255 bronze alloy
Hardware Shield – 356-T6 aluminum alloy
Stud Clamping Hardware – silicon bronze

Suffix "-13" denotes 13/8" O.D. washer size in bolt wells.

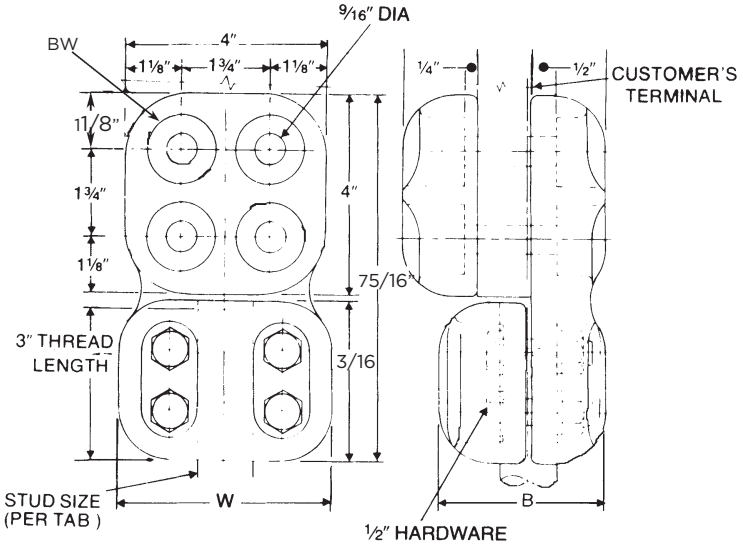

345 kV LINE-TO-LINE APPLICATIONS

CATALOG NUMBER	STUD DIA IN./THD	DIMENSIONS – INCHES (MM)			APPROX. WT. EA. LBS. (KG)
		B	W	BW	
BHVSF11D12	1-1/8 - 12	3-1/2 (88.90)	4-5/16 (109.54)	1-1/8 (28.58)	13.3 (6.03)
BHVSF14D12	1-1/2 - 12	3-1/2 (88.90)	4-1/2 (114.30)	1-1/8 (28.58)	13.8 (6.26)
BHVSF20D12	2 - 12	4 (101.60)	5-1/4 (133.35)	1-1/8 (28.58)	16.0 (7.26)
BHVSF24D12	2-1/2 - 12	4-3/4 (120.65)	5-3/4 (146.05)	1-1/8 (28.58)	17.7 (8.04)
BHVSF27D0	2-7/8 SMOOTH	5 (127.00)	6-3/8 (161.93)	1-7/16 (33.46)	19.2 (8.72)
BHVSF14D1213	1-1/2 - 12	4 (101.60)	5-1/4 (133.35)	1-7/16 (33.46)	13.5 (6.13)
BHVSF22D1213	2-1/4 - 12	4-1/2 (114.30)	5-1/2 (139.70)	1-7/16 (33.46)	16.9 (7.67)

SUBSTATION STUD CONNECTORS

BRONZE BOLTED STUD CONNECTORS TO FLAT PAD WITH HARDWARE SHIELD TYPE BHVSD

BRONZE
BHVSD

Bronze alloy stud connectors are designed for corona free service at 345 KV. Tongue holes have NEMA spacing with contact surface on both sides. Does not include tongue mounting hardware or bolt shields; these components must be ordered separately. This connector may be supplied tin plated by adding "TP" to catalog number (example: BHVSD-20-D-1-12-TP). The bronze body of this connector provides an ideal transition surface to connect an aluminum terminal on both surfaces.

Material: **Castings** – 255 bronze alloy
Stud Clamping Hardware – silicon bronze

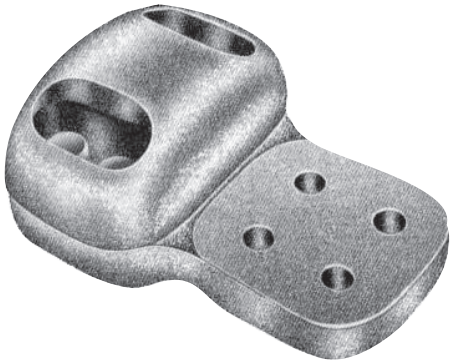

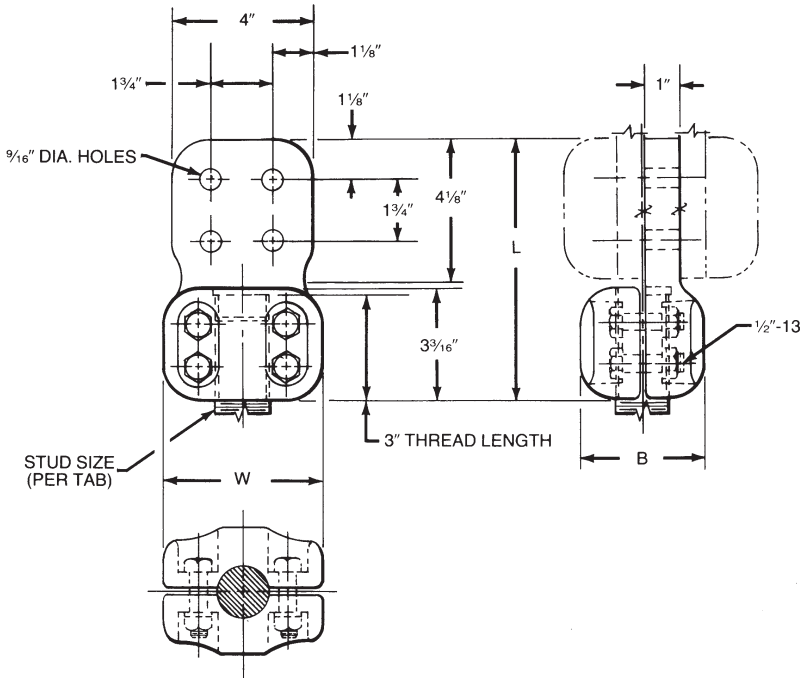

345 kV LINE-TO-LINE APPLICATIONS

CATALOG NUMBER	STUD DIA IN./THD	DIMENSIONS – INCHES (MM)			APPROX. WT. EA. LBS. (KG)
		B	W	L	
BHVSD11D112	1-1/8 - 12	3-5/8 (92.08)	4-1/2 (114.30)	7-7/16 (188.91)	13.9 (6.31)
BHVSD14D112	1-1/2 - 12	3-5/8 (92.08)	4-1/2 (114.30)	7-7/16 (188.91)	13.9 (6.31)
BHVSD20D112	2 - 12	4 (101.60)	5-1/4 (133.35)	7-3/4 (196.85)	17.6 (7.98)
BHVSD24D112	2-1/2 - 12	4-3/4 (120.65)	5-3/4 (146.05)	7-3/4 (196.85)	18.2 (8.26)
BHVSD30D112	3 - 12	5 (127.00)	6-3/8 (161.93)	8-1/16 (204.79)	20.9 (9.48)

SUBSTATION STUD CONNECTORS

ALUMINUM EHV BOLTED STUD CONNECTORS TO FLAT PAD WITH HARDWARE SHIELD TYPE HVSF

ALUMINUM
HVSF

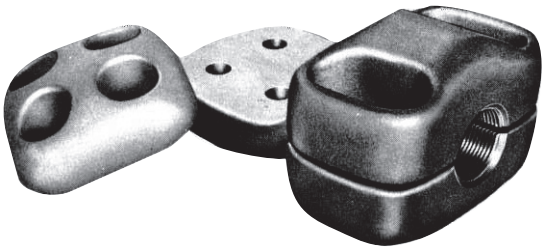

Aluminum alloy stud connectors are designed for corona free service at 345 KV. Stud threads are factory coated with sealant and connectors are individually sealed in plastic bag. *Bolt shield is furnished with this catalog item.* Pad mounting hardware is not furnished as part of this catalog number and must be ordered separately; specify thickness of pad to be clamped when ordering hardware. Tongue holes have NEMA spacing. Contact sealant is recommended.

Material: **Castings** – 356-T6 aluminum alloy
Bolt Shield – 356-T6 aluminum alloy
Clamping Hardware – aluminum alloy

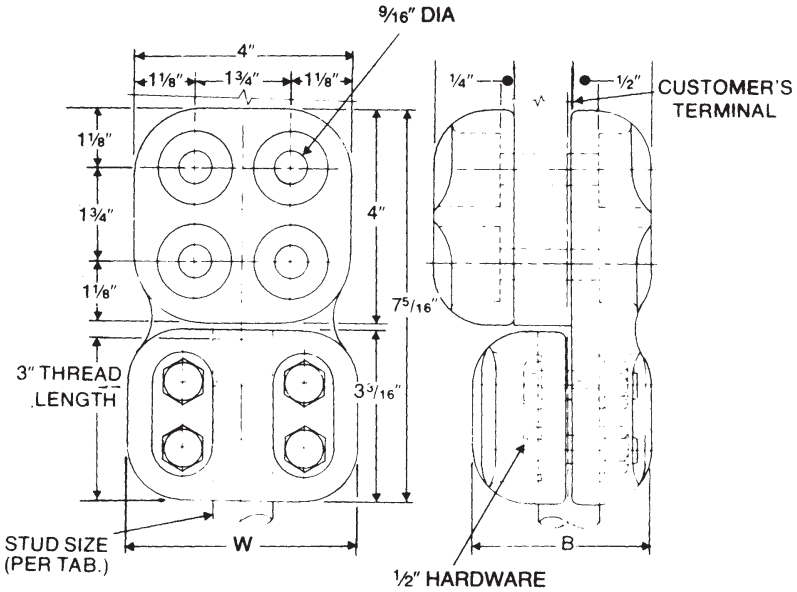

345 kV LINE-TO-LINE APPLICATIONS

CATALOG NUMBER	STUD DIA. IN./THD	DIMENSIONS – INCHES (MM)		APPROX. WT. EA. LBS.(KG)
		B	W	
HVSF11D12	1-1/8 - 12	3-1/2 (88.90)	4-5/16 (109.54)	5.7 (2.59)
HVSF14D12	1-1/2 - 12	3-1/2 (88.90)	4-1/2 (114.30)	5.6 (2.54)
HVSF20D12	2 - 12	4 (101.60)	5-1/4 (133.35)	6.4 (2.90)
HVSF24D12	2-1/2 - 12	4-3/4 (120.65)	5-3/4 (146.05)	6.6 (2.99)
HVSF30D12	3 - 12	5 (127.00)	6-3/8 (161.93)	6.8 (3.08)

SUBSTATION STUD CONNECTORS

EHV BIFURCATING STUD CONNECTORS TO TWO FLAT PADS TYPE EVSF2

ALUMINUM
EVSF2

Aluminum alloy stud to double flat connectors are designed for corona free service at 500 KV. The connectors are designed for use with Type CCL-EHV compression lugs. Stud threads are factory coated with sealant and connectors are individually sealed in plastic bag. Terminal clamping hardware is not furnished as part of this catalog number. This connector is designed to clamp terminal pads of a maximum thickness of 1". To assure corona free performance, tap terminal must be connected. Tongue holes have NEMA spacing. Contact sealant is recommended.
For pads in horizontal plane, add "-90" after stud size in number (Example - EVSF2-20-90-12-18)

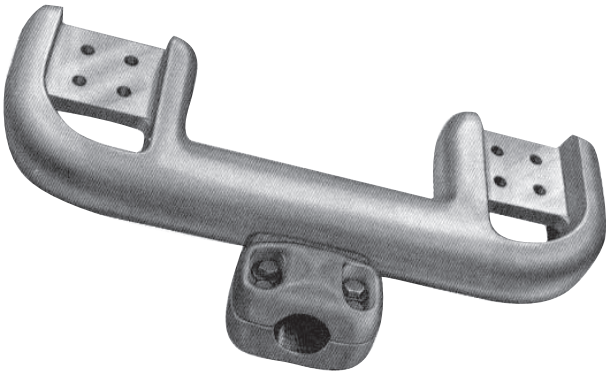

Material: **Castings** – 356-T6 aluminum alloy
Stud Clamping Hardware – aluminum alloy

Note: Contact factory to obtain stud body at special angles.

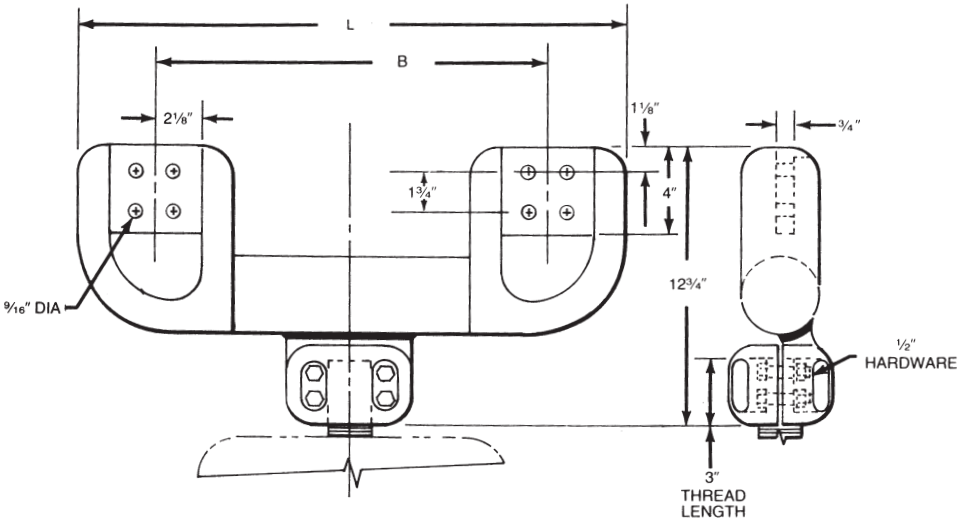

300 kV AND 500 kV LINE-TO-LINE APPLICATIONS

CATALOG NUMBER	STUD DIA. IN./THD	DIMENSIONS – INCHES (MM)		APPROX. WT. EA. LBS. (KG)
		B	L	
EVSF2141212	1-1/2 - 12	12	19-1/8	26.4
EVSF2141218	1-1/2 - 12	18	25-1/8	28.8
EVSF2201212	2 - 12	12	19-1/8	26.0
EVSF2201218	2 - 12	18	25-1/8	28.8
EVSF2301212	3 - 12	12	19-1/8	27.2
EVSF2301218	3 - 12	18	25-1/8	30.1

SUBSTATION STUD CONNECTORS

EHV WELDED EXPANSION STUD CONNECTORS FOR TUBE TYPE HVEDST/EVEDST

ALUMINUM
HVEDST/ EVEDST

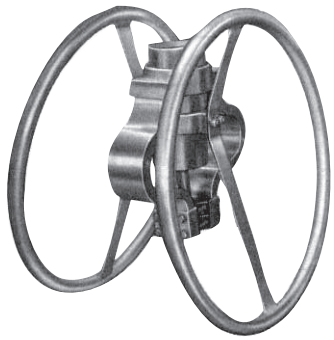

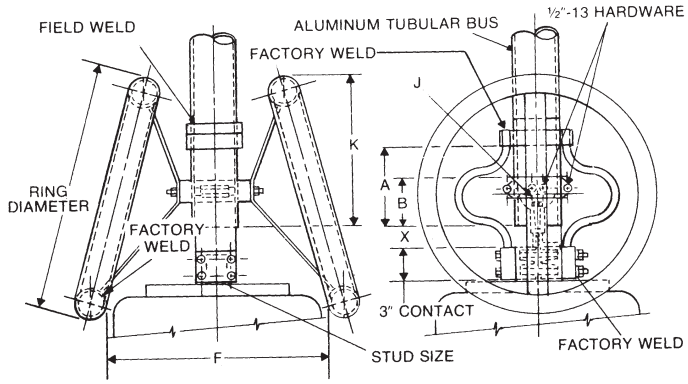

Aluminum alloy weldment expansion stud connectors are designed for corona free service at 345 and 500 KV respectively. Pressure plates are puddle-welded to straps on three (3) sides. Contact surfaces on pressure plates have bonded copper liners. Connector is designed for 3 one inch expansion. Specify "H" in catalog number if schedule 80 EHIPS tubing is to be used; example: HVEDSTH. Proper guide ball and laminations will be furnished. Spacing of corona rings is based on use over transformer expansion cap or dome of 17" diameter at 345 KV, or 22" diameter at 500 KV. Contact factory for information on other diameters.

Material:
- **Stud Body and Cap** – 255 bronze alloy
- **Shunt Body, Flatback and Guided Ball** – 356-T6 aluminum alloy
- **Corona Ring** – 6061-T6 aluminum alloy
- **Pressure Plates and Ring Brackets** – 6061-T6 aluminum alloy
- **Laminated Straps** – 1100-0 aluminum alloy
- **Stud Clamping Hardware** – stainless steel
- **Tube Clamping and Ring Mounting Hardware** – aluminum alloy
- **Guide Mounting Hardware** – galvanized steel

Refer to installation chart DC-6788 on page 91 for instructions.

345 kV AND 500 kV LINE-TO-LINE APPLICATIONS

CATALOG NUMBER	STUD DIA. IN./ THD.	ALUMINUM CONDUCTOR SIZE IPS	DIMENSIONS – INCHES (MM)				RING DIA.	INSTALLATION CHART LINE NUMBER	APPROX. WT. EA. LBS. (KG)
			A	B	F	J			
345 KV APPLICATIONS									
HVEDST1420G12	1-1/2 - 12	2	5-1/4 (133.35)	2-1/2 (63.50)	19-3/8 (492.13)	1/2 (12.70)	30 (762.00)	2	21.0 (9.53)
HVEDST1424G12	1-1/2 - 12	2-1/2	5-1/4 (133.35)	2-1/2 (63.50)	19-3/8 (492.13)	1/2 (12.70)	30 (762.00)	2	21.6 (9.80)
HVEDST1430G12	1-1/2 - 12	3	5-7/8 (149.23)	2-3/4 (69.85)	19-3/8 (492.13)	1/2 (12.70)	30 (762.00)	2	22.6 (10.25)
HVEDST1440G12	1-1/2 - 12	4	6-1/4 (158.75)	3 (76.20)	19-3/8 (492.13)	1/2 (12.70)	30 (762.00)	2	25.0 (11.34)
HVEDST1450G12	1-1/2 - 12	5	6-1/2 (165.10)	3 (76.20)	19-3/8 (492.13)	1/2 (12.70)	30 (762.00)	1	28.3 (12.84)
HVEDST1460G12	1-1/2 - 12	6	6-5/8 (168.28)	3 (76.20)	19-3/8 (492.13)	1/2 (12.70)	30 (762.00)	1	31.2 (14.15)
HVEDST2020G12	2 - 12	2	5-3/4 (146.05)	3 (76.20)	19-3/8 (492.13)	1/2 (12.70)	30 (762.00)	3	26.6 (12.07)
HVEDST2024G12	2-1/2- 12	2-1/2	5-3/4 (146.05)	3 (76.20)	19-3/8 (492.13)	1/2 (12.70)	30 (762.00)	3	27.4 (12.43)

Continued on next page

TYPE HVEDST/EVEDST WELDED EXPANSION STUD CONNECTORS FOR TUBE - (CONTINUED)

345 kV AND 500 kV LINE-TO-LINE APPLICATIONS

CATALOG NUMBER	STUD DIA. IN./THD.	ALUMINUM CONDUCTOR SIZE IPS	DIMENSIONS – INCHES (MM)				RING DIA.	INSTALLATION CHART LINE NUMBER	APPROX. WT. EA. LBS. (KG)
			A	B	F	J			
345 KV APPLICATIONS									
HVEDST2030G12	2 - 12	3	6-3/8 (161.93)	3-1/4 (82.55)	19-3/8 (492.13)	1/2 (12.70)	30 (762.00)	3	28.1 (12.75)
HVEDST2034G12	2 - 12	3-1/2	6-1/2 (165.10)	3-3/8 (85.73)	19-3/8 (492.13)	1/2 (12.70)	30 (762.00)	3	28.8 (13.06)
HVEDST2040G12	2 - 12	4	6-1/4 (158.75)	3 (76.20)	19-3/8 (492.13)	1/2 (12.70)	30 (762.00)	2	29.9 (13.56)
HVEDST2050G12	2 - 12	5	6 (152.40)	3 (76.20)	19-3/8 (492.13)	1/2 (12.70)	30 (762.00)	1	32.4 (14.70)
HVEDST2060G12	2 - 12	6	6-5/8 (168.28)	3 (76.20)	19-3/8 (492.13)	1/2 (12.70)	30 (762.00)	1	34.7 (15.74)
HVEDST2220G12	2-1/4 - 12	2	5-3/4 (146.05)	3 (76.20)	19-3/8 (492.13)	1/2 (12.70)	30 (762.00)	3	26.5 (12.02)
HVEDST2224G12	2-1/4 - 12	2-1/2	5-3/4 (146.05)	3 (76.20)	19-3/8 (492.13)	1/2 (12.70)	30 (762.00)	3	28.0 (12.70)
HVEDST2230G12	2-1/4 - 12	3	6-1/4 (158.75)	2-5/8 (66.68)	19-3/8 (492.13)	1/2 (12.70)	30 (762.00)	3	29.0 (13.15)
HVEDST2240G12	2-1/4 - 12	4	6-1/4 (158.75)	3 (76.20)	19-3/8 (492.13)	1/2 (12.70)	30 (762.00)	2	30.7 (13.93)
HVEDST2250G12	2-1/4 - 12	5	6-1/2 (165.10)	3 (76.20)	19-3/8 (492.13)	1/2 (12.70)	30 (762.00)	1	34.3 (15.56)
HVEDST2260G12	2-1/4 - 12	6	6-5/8 (168.28)	3 (76.20)	19-3/8 (492.13)	1/2 (12.70)	30 (762.00)	1	37.1 (16.83)
500 KV APPLICATIONS									
EVEDST1430G12	1-1/2 - 12	3	6-15/16 (176.21)	2-3/4 (69.85)	22-1/8 (561.98)	1/2 (12.70)	24 (609.60)	2	26.1 (11.84)
EVEDST1440G12	1-1/2 - 12	4	6-11/16 (169.86)	3 (76.20)	22-1/8 (561.98)	1/2 (12.70)	24 (609.60)	2	28.5 (12.93)
EVEDST1450G12	1-1/2 - 12	5	6-9/16 (166.69)	3 (76.20)	22-1/8 (561.98)	1/2 (12.70)	24 (609.60)	1	31.8 (14.42)
EVEDST1460G12	1-1/2 - 12	6	6-1/8 (155.58)	3 (76.20)	22-1/8 (561.98)	1/2 (12.70)	24 (609.60)	1	34.7 (15.74)
EVEDST2030G12	2 - 12	3	5-3/4 (146.05)	3-1/4 (82.55)	22-1/8 (561.98)	1/2 (12.70)	24 (609.60)	3	31.6 (14.33)
EVEDST2040G12	2 - 12	4	6-1/8 (155.58)	3 (76.20)	22-1/8 (561.98)	1/2 (12.70)	24 (609.60)	2	33.4 (15.15)
EVEDST2050G12	2 - 12	5	6-1/4 (158.75)	3 (76.20)	22-1/8 (561.98)	1/2 (12.70)	24 (609.60)	1	35.9 (16.28)
EVEDST2060G12	2 - 12	6	6-1/8 (155.58)	3 (76.20)	22-1/8 (561.98)	1/2 (12.70)	24 (609.60)	1	38.8 (17.60)
EVEDST2230G12	2-1/4 - 12	3	5-7/8 (149.23)	2-5/8 (66.68)	22-1/8 (561.98)	1/2 (12.70)	24 (609.60)	3	32.5 (14.74)
EVEDST2240G12	2-1/4 - 12	4	6-1/4 (158.75)	3 (76.20)	22-1/8 (561.98)	1/2 (12.70)	24 (609.60)	2	34.2 (15.51)
EVEDST2250G12	2-1/4 - 12	5	6 (152.40)	3 (76.20)	22-1/8 (561.98)	1/2 (12.70)	24 (609.60)	1	37.8 (17.15)
EVEDST2260G12	2-1/4 - 12	6	6-1/8 (155.58)	3 (76.20)	22-1/8 (561.98)	1/2 (12.70)	24 (609.60)	1	40.0 (18.14)

Refer to Type HVEDST90 listings for bus type 90° to stud.

SUBSTATION STUD CONNECTORS

EHV WELDED 90˚ EXPANSION STUD CONNECTORS FOR TUBE TYPE HVEDST-90 / EVEDST-90

ALUMINUM

HVEDST-90/ EVEDST-90

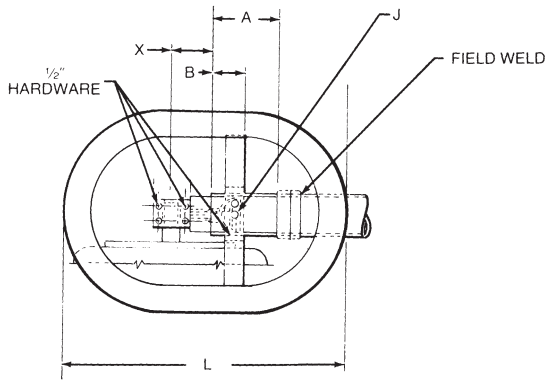

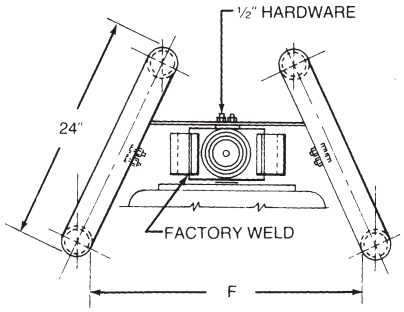

Aluminum alloy weldment expansion stud connectors are the same as Type HVEDST/EVEDST listed on preceding pages, except they mount at 90˚ to the stud. Both are designed for corona free service at 345 and 500 KV respectively. Pressure plates are puddle-welded to straps on three (3) sides. Contact surfaces on pressure plates have bonded copper liners. Connector is designed for 3 one inch expansion. Specify "H" in catalog number if schedule 80 EHIPS tubing is to be used; example: WSATHL. Spacing of corona rings is based on use over transformer expansion cap or dome of 17" diameter at 345 KV, or 22" diameter at 500 KV. Contact factory for information on other diameters.

Material:
- **Stud Body and Cap** – 255 bronze alloy
- **Shunt Body, Flatback and Guide Ball** – 356-T6 aluminum alloy
- **Corona Ring** – 6061-T6 aluminum alloy
- **Pressure Plates & Ring Brackets** – 6061-T6 aluminum alloy
- **Laminated Straps** – 1100-0 aluminum alloy
- **Stud Clamping Hardware** – stainless steel
- **Tube Clamping and Ring Mounting Hardware** – aluminum alloy
- **Guide Mounting Hardware** – galvanized steel

Refer to installation chart DC-6790 for instructions.

345 kV AND 500 kV LINE-TO-LINE APPLICATIONS

CATALOG NUMBER	STUD DIA. IN./ THD.	ALUMINUM CONDUCTOR SIZE IPS	DIMENSIONS – INCHES (MM)					INSTALLATION CHART LINE NUMBER	APPROX. WT. EA. LBS. (KG)
			A	B	F	J	L		
345 KV APPLICATIONS									
HVEDST1420G9012	1-1/2 - 12	2	5-1/4 (133.35)	2-1/2 (63.50)	23-3/8 (593.73)	1/2 (12.70)	27 (685.80)	4	19.5 (8.85)
HVEDST1424G9012	1-1/2 - 12	2-1/2	5-1/4 (133.35)	2-1/2 (63.50)	23-3/8 (593.73)	1/2 (12.70)	27 (685.80)	4	20.1 (9.12)
HVEDST1430G9012	1-1/2 - 12	3	5-7/8 (149.23)	2-3/4 (69.85)	23-3/8 (593.73)	1/2 (12.70)	27 (685.80)	3	21.1 (9.57)
HVEDST1440G9012	1-1/2 - 12	4	6-1/4 (158.75)	3 (76.20)	23-3/8 (593.73)	1/2 (12.70)	27 (685.80)	2	23.5 (10.66)
HVEDST1450G9012	1-1/2 - 12	5	6-1/2 (165.10)	3 (76.20)	28-5/8 (727.08)	1/2 (12.70)	27 (685.80)	1	26.8 (12.16)
HVEDST1460G9012	1-1/2 - 12	6	6-5/8 (168.28)	3 (76.20)	28-5/8 (727.08)	1/2 (12.70)	27 (685.80)	1	29.7 (13.47)
HVEDST2020G9012	2 - 12	2	5-3/4 (146.05)	3 (76.20)	23-3/8 (593.73)	1/2 (12.70)	27 (685.80)	2	25.1 (11.39)
HVEDST2024G9012	2 - 12	2-1/2	5-3/4 (146.05)	3 (76.20)	23-3/8 (593.73)	1/2 (12.70)	27 (685.80)	1	26.6 (12.07)
HVEDST2030G9012	2 - 12	3	6-3/8 (161.9)	3-1/4 (82.55)	23-3/8 (593.73)	1/2 (12.70)	27 (685.80)	1	26.6 (12.07)
HVEDST2034G9012	2 - 12	3-1/2	6-1/2 (165.10)	3-3/8 (85.73)	23-3/8 (593.73)	1/2 (12.70)	27 (685.80)	1	27.3 (12.38)
HVEDST2040G9012	2 - 12	4	6-1/4 (158.75)	3 (76.20)	23-3/8 (593.73)	1/2 (12.70)	27 (685.80)	1	28.4 (12.88)
HVEDST2050G9012	2 - 12	5	6 (152.40)	3 (76.20)	28-5/8 (727.08)	1/2 (12.70)	27 (685.80)	1	30.9 (14.02)

Continued on next page

TYPE HVEDST-90/EVEDST-90 WELDED EXPANSION STUD CONNECTORS FOR TUBE – (CONTINUED)

345 kV AND 500 kV LINE-TO-LINE APPLICATIONS

CATALOG NUMBER	STUD DIA. IN./ THD.	ALUMINUM CONDUCTOR SIZE IPS	DIMENSIONS – INCHES (MM)					INSTALLATION CHART LINE NUMBER	APPROX. WT. EA. LBS. (KG)
			A	B	F	J	L		
345 KV APPLICATIONS									
HVEDST2060G9012	2 - 12	6	6-5/8 (168.28)	3 (82.55)	28-5/8 (727.08)	1/2 (12.70)	27 (685.80)	1	33.2 (15.06)
HVEDST2220G9012	2-1/4 - 12	2	5-3/4 (146.05)	3 (82.55)	23-3/8 (593.73)	1/2 (12.70)	27 (685.80)	2	25.0 (11.34)
HVEDST2224G9012	2-1/4 - 12	2-1/2	5-3/4 (146.05)	3 (82.55)	23-3/8 (593.73)	1/2 (12.70)	27 (685.80)	2	26.5 (12.02)
HVEDST2230G9012	2-1/4 - 12	3	6-1/4 (158.75)	2-5/8 (66.68)	23-3/8 (593.73)	1/2 (12.70)	27 (685.80)	1	27.5 (12.47)
HVEDST2240G9012	2-1/4 - 12	4	6-1/4 (158.75)	3 (82.55)	28-5/8 (727.08)	1/2 (12.70)	27 (685.80)	1	29.2 (13.25)
HVEDST2250G9012	2-1/4 - 12	5	6-1/2 (165.10)	3 (82.55)	28-5/8 (727.08)	1/2 (12.70)	27 (685.80)	1	32.8 (14.88)
HVEDST2260G9012	2-1/4- 12	6	6-5/8 (168.28)	3 (82.55)	28-5/8 (593.73)	1/2 (12.70)	27 (685.80)	1	35.6 (16.15)
500 KV APPLICATIONS									
EVEDST1430G9012	1-1/2 - 12	3	6-15/16 (176.21)	3-7/8 (98.43)	24-3/4 (628.65)	1/2 (12.70)	31 (787.40)	3	24.1 (10.93)
EVEDST1434G9012	1-1/2 - 12	3-1/2	6-11/16 (169.86)	4-1/4 (107.95)	24-3/4 (628.65)	1/2 (12.70)	31 (787.40)		
EVEDST1440G9012	1-1/2 - 12	4	6-11/16 (169.86)	3-1/2 (88.90)	24-3/4 (628.65)	1/2 (12.70)	31 (787.40)	2	26.5 (12.02)
EVEDST1450G9012	1-1/2 - 12	5	6-9/16 (166.69)	3-1/8 (79.38)	24-3/4 (628.65)	1/2 (12.70)	31 (787.40)	1	29.8 (13.52)
EVEDST2030G9012	2 - 12	3	5-3/4 (146.05)	2-5/8 (66.68)	24-3/4 (628.65)	1/2 (12.70)	31 (787.40)	1	29.6 (13.43)
EVEDST2034G9012	2 - 12	3-1/2	5-7/8 (149.23)	3 (76.20)	24-3/4 (628.65)	1/2 (12.70)	31 (787.40)		
EVEDST2040G9012	2 - 12	4	6-1/8 (155.58)	3 (76.20)	24-3/4 (628.65)	1/2 (12.70)	31 (787.40)	1	31.4 (14.24)
EVEDST2050G9012	2 - 12	5	6-1/4 (158.75)	3-1/4 (82.55)	24-3/4 (628.65)	1/2 (12.70)	31 (787.40)	1	33.9 (15.38)
EVEDST2230G9012	2-1/4 - 12	3	5-7/8 (149.23)	2-5/8 (66.68)	24-3/4 (628.65)	1/2 (12.70)	31 (787.40)	1	30.5 (13.83)
EVEDST2240G9012	2-1/4 - 12	4	6-1/4 (158.75)	3 (76.20)	24-3/4 (628.65)	1/2 (12.70)	31 (787.40)	1	32.2 (14.61)

SUBSTATION END BELLS

EHV BOLTED END BELLS FOR TUBE TYPE HVTEB/EVTEB

ALUMINUM
HVTEB/EVTEB

Aluminum alloy tubular end bells are corona free at 345 and 500 KV levels respectively. The spheres are finished free of nicks, burrs and scratches.

Material: **Sphere** – 356-F aluminum alloy
Clamping Ring – 356-T6 aluminum alloy
Hardware – stainless steel

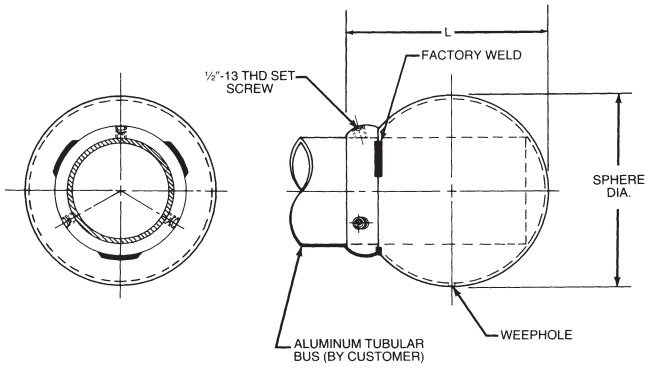

Figure 1

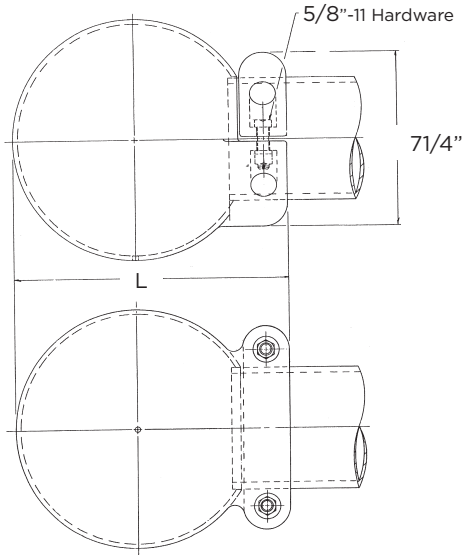

Figure 2

345 kV AND 500 kV LINE-TO-LINE APPLICATIONS

CATALOG NUMBER	ALUMINUM CONDUCTOR SIZE TUBING IPS/EHIPS	FIGURE	SPHERE DIAMETER IN.	DIMENSIONS - INCHES (MM) L	APPROX. WT. EA. LBS. (KG)
345 KV APPLICATIONS					
HVTEB24	2-1/2	1	7-7/8 (200.03)	8-7/8 (225.43)	5.7 (2.59)
HVTEB30	3	1	7-7/8 (200.03)	8-11/16 (220.66)	5.7 (2.59)
HVTEB34	3-1/2	1	7-7/8 (200.03)	8-1/2 (215.90)	5.7 (2.59)
HVTEB40	4	1	7-7/8 (200.03)	8-5/16 (211.14)	5.7 (2.59)
HVTEB50	5	1	7-7/8 (200.03)	7-3/4 (196.85)	5.7 (2.59)
HVTEB60	6	1	7-7/8 (200.03)	7-1/8 (100.98)	5.7 (2.59)
500 KV APPLICATIONS					
EVTEB30	3	1	10 (254.00)	11 (279.40)	8.5 (3.86)
EVTEB34	3-1/2	1	10 (254.00)	10-13/16 (274.64)	8.5 (3.86)
EVTEB40	4	1	10 (254.00)	10-5/8 (269.88)	8.5 (3.86)
EVTEB4013	4	2	13 (330.20)	15-1/4 (387.35)	17.8 (8.08)
EVTEB50	5	1	10 (254.00)	10-1/4 (260.35)	8.5 (3.86)
EVTEB60	6	1	10 (254.00)	9-7/8 (250.83)	8.5 (3.86)

SUBSTATION END BELLS

EHV WELDED END BELLS FOR TUBE WELDED ANGLE COUPLER TYPE HVWTEB/EVWTEB

ALUMINUM
HVWTEB/ EVWTEB

Aluminum alloy tubular end bells are corona free at 345 and 500 KV levels respectively. The spheres are finished free of nicks, burrs and scratches. May be used as variable angle coupler. When used as coupler, specify heat treated, HVWTEB-50-HT.

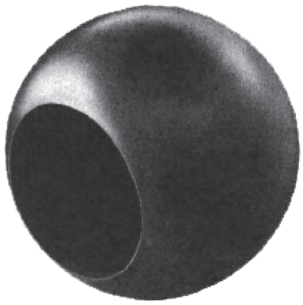

Material: **Sphere** - 356-F aluminum alloy

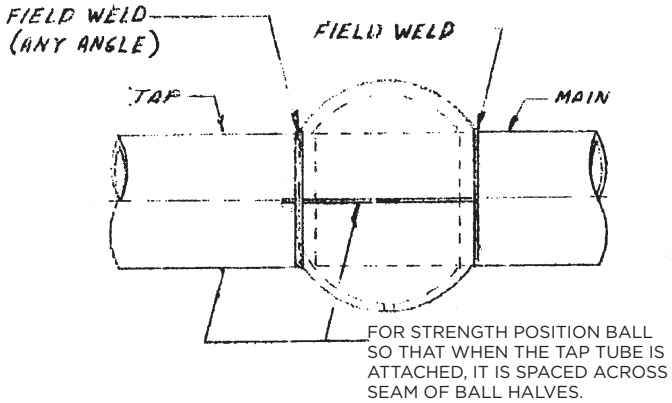

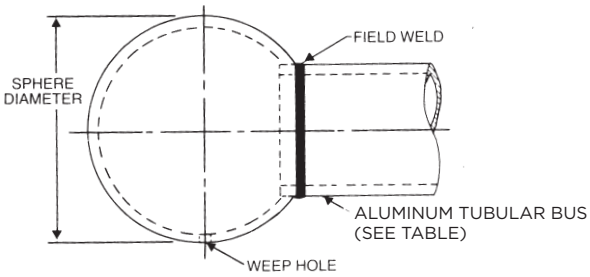

345 kV AND 500 kV LINE-TO-LINE APPLICATIONS

CATALOG NUMBER	ALUMINUM CONDUCTOR SIZE TUBING IPS/EHIPS	SPHERE DIAMETER IN.	APPROX. WT. EA. LBS. (KG)
345 KV APPLICATIONS			
HVWTEB20	2	7-7/8 (200.03)	3.8 (1.72)
HVWTEB24	2-1/2	7-7/8 (200.03)	3.8 (1.72)
HVWTEB30	3	7-7/8 (200.03)	3.8 (1.72)
HVWTEB34	3-1/2	7-7/8 (200.03)	3.8 (1.72)
HVWTEB40	4	7-7/8 (200.03)	3.8 (1.72)
HVWTEB50	5	7-7/8 (200.03)	3.8 (1.72)
HVWTEBH60	6	7-7/8 (200.03)	6.6 (2.99)
500 KV APPLICATIONS			
EVWTEB30	3	10 (254.00)	6.3 (2.86)
EVWTEB34	3-1/2	10 (254.00)	6.3 (2.86)
EBWTEB40	4	10 (254.00)	6.3 (2.86)
EVWTEB50	5	10 (254.00)	6.3 (2.86)
EVWTEB5013	5	13 (330.20)	13.3 (6.04)
EVWTEB60	6	10 (254.00)	6.3 (2.86)

EHV BOLTED GROUNDING STUDS FOR TUBE TYPE EVTGS

ALUMINUM
EVTGS

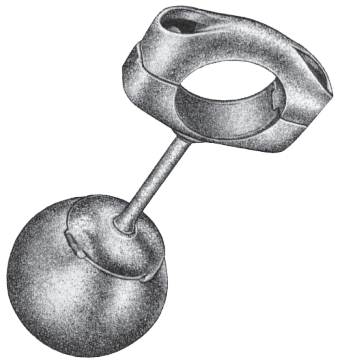

Aluminum alloy grounding studs are designed for corona free service at 345 and 500 KV. This assembly is finished free of nicks, burrs and scratches. Contact sealant is recommended.

Material: **Connector** - 356-T6 aluminum alloy
Corona Ball - 356-F aluminum alloy
Clamping Hardware - aluminum alloy

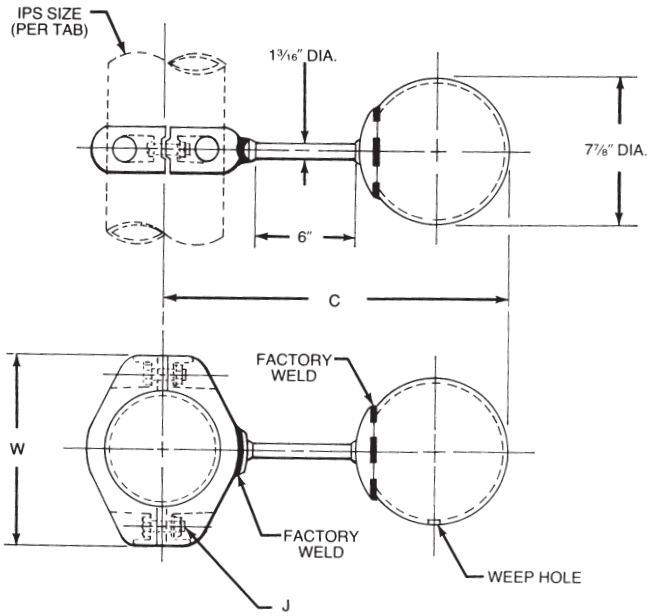

345 kV AND 500 kV LINE-TO-LINE APPLICATIONS

CATALOG NUMBER	ALUMINUM CONDUCTOR SIZE IPS/EHIPS	DIMENSIONS INCHES (MM)			APPROX. WT. EA. LBS. (KG)
		C	W	J	
EVTGS24	2-1/2	17-1/2 (444.50)	6-5/8 (168.28)	5/8 (15.88)	4.2 (1.91)
EVTGS30	3	18 (457.20)	7-1/4 (184.15)	5/8 (15.88)	4.6 (2.09)
EVTGS34	3-1/2	18 (457.20)	7-3/4 (196.85)	5/8 (15.88)	5.6 (2.54)
EVTGS40	4	18-1/16 (458.79)	8-1/2 (215.90)	5/8 (15.88)	8.1 (3.67)
EVTGS50	5	18-5/8 (473.08)	9-1/2 (241.30)	5/8 (15.88)	8.5 (3.86)
EVTGS60	6	19-1/8 (484.19)	10-3/8 (263.53)	5/8 (15.88)	9.1 (4.13)

EHV BOLTED GROUNDING STUDS FOR CABLE TYPE HVCGS

ALUMINUM
HVCGS

Aluminum alloy grounding studs are designed for corona free service at 345 KV. Single cable diameter under 1.76 inch for 345 KV may not be corona free unless conductors are bundled. Contact sealant is recommended.

Material: **Connector** - 356-T6 aluminum alloy
Clamping Hardware - aluminum alloy

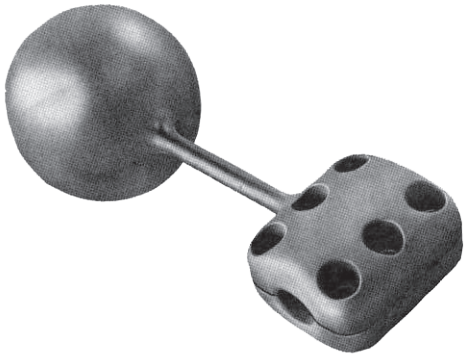

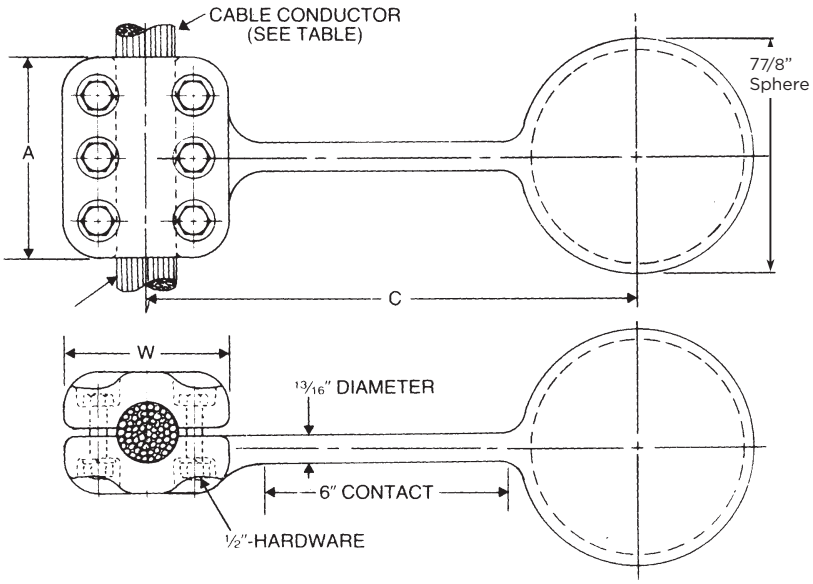

345 kV LINE-TO-LINE APPLICATIONS

CATALOG NUMBER	ALUMINUM CONDUCTOR SIZE		DIMENSIONS INCHES (MM)			NUMBER OF BOLTS	APPROX. WT. EA. LBS. (KG)
	CABLE	DIA. IN.	A	C	W		
HVCGS1028	795 MCM ALUM.	1.028	4 (101.60)	13-11/16 (347.66)	4-1/4 (107.95)	4	9.2 (4.18)
HVCGS1108	795 MCM (26/7) ACSR	1.108	4 (101.60)	13-11/16 (347.66)	4-1/4 (107.95)	4	9.2 (4.18)
HVCGS1196	954 MCM (54/7) ACSR	1.196	4 (101.60)	13-13/16 (350.84)	4-7/16 (112.71)	4	9.3 (4.22)
HVCGS1300	1.200 – 1.300	–	4 (101.60)	13-3/4 (349.25)	4-5/8 (117.48)	4	9.6 (4.35)
HVCGS1379	1431 MCM ALUM.	1.379	4 (101.60)	13-3/4 (349.25)	4-5/8 (117.48)	4	9.6 (4.35)
HVCGS1382	1272 (54/19) ACSR	1.382	4 (101.60)	13-3/4 (349.25)	4-5/8 (117.48)	4	9.6 (4.35)
HVCGS1545	1590 (54/19) ACSR	1.545	6 (152.40)	14-3/16 (360.36)	5-1/4 (133.35)	6	12.8 (5.81)
HVCGS1762	2156 (84/19) ACSR	1.762	6 (152.40)	14-3/16 (360.36)	5-1/4 (133.35)	6	12.8 (5.81)
HVCGS1824	2500 MCM ALUM.	1.824	6 (152.40)	14-13/16 (360.36)	5-1/4 (133.35)	6	12.8 (5.81)

Contact factory for sizes not shown.

SUBSTATION SPECIALTIES

EHV TUBE TERMINAL WELDED END PLUG-EYE TYPE WEPE

ALUMINUM
WEPE

Terminate a tubing run to insulator with 5/8" clevis pin. Corona free performance of this item is dependent upon the use of grading rings on the insulators.

Material: 356-T6 Aluminum Alloy

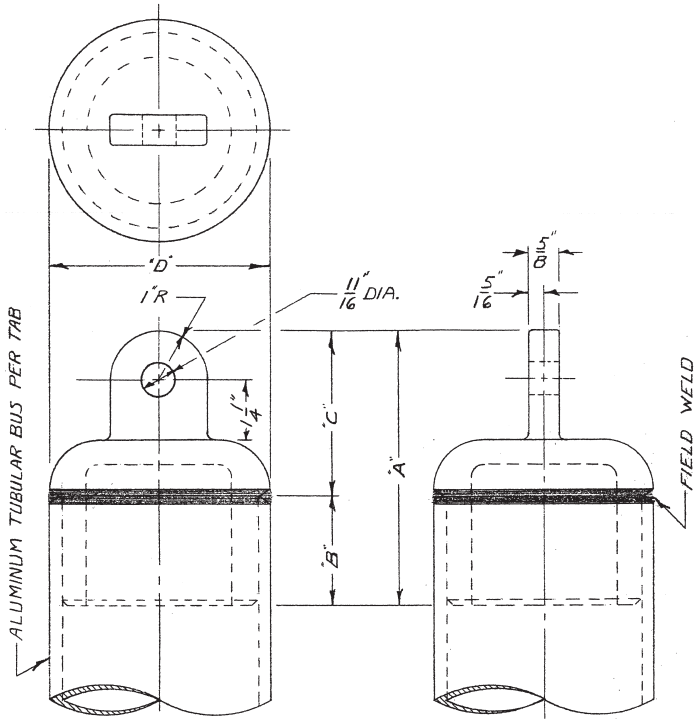

345 kV LINE-TO-LINE APPLICATIONS

CATALOG NUMBER	BUS SIZE	DIMENSIONS INCHES				APPROX. WT. EA. LBS. (KG)
		A	B	C	D	
WEPE24	2-1/2" IPS	4-31/32	1-1/2	3-15/32	2-7/8	.9 (.41)
WEPE40	4" IPS	5-3/4	2-1/4	3-1/2	4-1/2	2.7 (1.23)

EHV WELDED GROUNDING STUDS FOR TUBE TYPE EVWTGSR

ALUMINUM
EVWTGSR

Aluminum alloy, range-taking, tubular grounding studs are designed for corona free service at 345 and 500 KV. The EVWTGSR is finished free of nicks, burrs and scratches.

Material: **Connector** – 356-T6 aluminum alloy
Ball – 356-T6 aluminum alloy

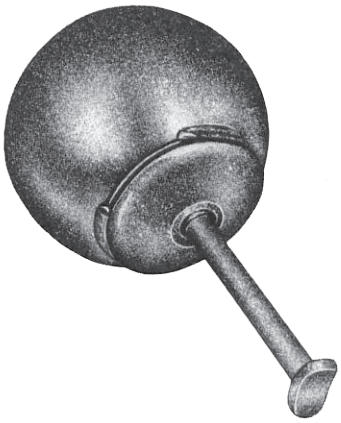

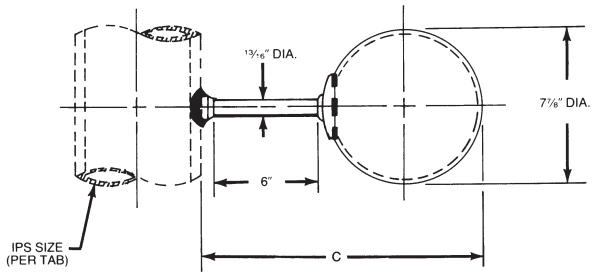

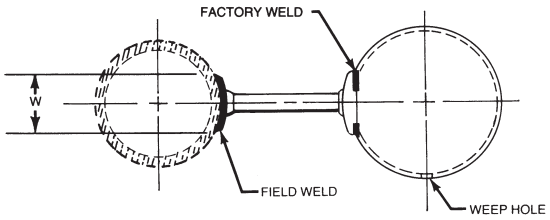

345 kV AND 500 kV LINE-TO-LINE APPLICATIONS

CATALOG NUMBER	ALUMINUM CONDUCTOR SIZE TUBING IPS/EHIPS	DIMENSIONS – INCHES (MM)		APPROX. WT. EA. LBS. (KG)
		W	C	
*EVWTGSR2034	2 - 3-1/2	1-1/8 (28.58)	14-13/16 (376.24)	4.6 (2.09)
EVWTGSR4060	4 - 6	1-1/8 (28.58)	14-13/16 (376.24)	4.8 (2.18)

**Conductor smaller than 2 1/2" IPS may not be corona free at 500 KV.*

SUBSTATION SPECIALTIES

EHV BOLTED CONDUCTOR SPACERS TYPE HVS2C/EVS2C

ALUMINUM

HVS2C/EVS2C

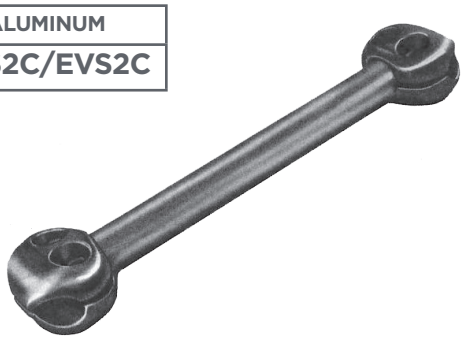

Aluminum alloy spacers for two cables are designed for corona free service at 345 and 500 KV respectively. The grooves are fully rounded at entry to prevent conductor damage. Cable spacing other than shown may be ordered by changing catalog number suffix (example: HVS2C-1108-16 for 1.108 diameter cable at 16" center line to center line). *Not for use on overhead transmission lines.*

Material:
Caps – 356-T6 aluminum alloy
Cross Braces – 6061-T6 aluminum alloy
Bolts, Nuts and Lockwashers – aluminum alloy
Hardware Retaining Grommet – neoprene

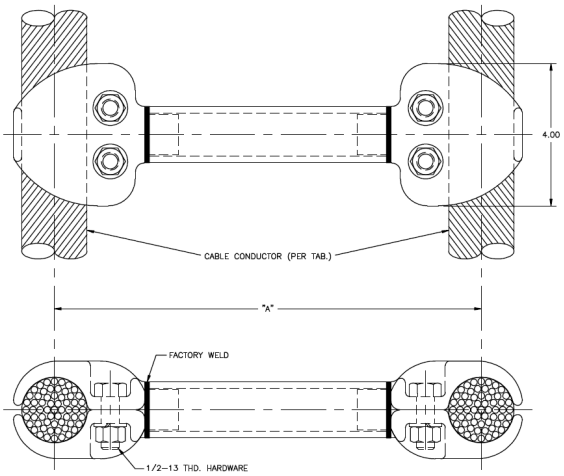

345 kV AND 500 kV LINE-TO-LINE APPLICATIONS

CATALOG NUMBER	ALUMINUM CONDUCTOR RANGE			DIM – IN (MM)	APPROX. WT. EA. LBS. (KG)
	DIAMETER IN.	AAC (MIN. MAX.)	ACSR (MIN. MAX.)	A	
345 KV APPLICATIONS					
HVS2C10368	1.019 – 1.036	795 (37 Str.) – 800 (61 Str.)	636 (30/19) – 715.5 (54/7)	8 (203.2)	2.8 (1.26)
HVS2C103612	1.019 – 1.036	795 (37 Str.) – 800 (61 Str.)	636 (30/19) – 715.5 (54/7)	12 (304.8)	3.0 (1.36)
HVS2C103618	1.019 – 1.036	795 (37 Str.) – 800 (61 Str.)	636 (30/19) – 715.5 (54/7)	18 (457.2)	3.3 (1.49)
HVS2C11088	1.070 – 1.108	874.5 (37 Str.) – 900 (61 Str.)	715.5 (30/19) – 795 (54/7)	8 (203.2)	3.5 (1.61)
HVS2C110812	1.070 – 1.108	874.5 (37 Str.) – 900 (61 Str.)	715.5 (30/19) – 795 (54/7)	12 (304.8)	3.7 (1.68)
HVS2C110818	1.070 – 1.108	874.5 (37 Str.) – 900 (61 Str.)	715.5 (30/19) – 795 (54/7)	18 (457.2)	4.0 (1.81)
HVS2C116212	1.124 – 1.162	954 (37 Str.) – 1000 (61 Str.)	900 (45/7) – 900 (54/7)	12 (304.8)	3.8 (1.72)
HVS2C11968	1.165 – 1.196	1033.5 (37 Str.) – 1033.5 (61 Str.)	954 (45/7) – 954 (54/7)	8 (203.2)	3.6 (1.66)
HVS2C119612	1.165 – 1.196	1033.5 (37 Str.) – 1033.5 (61 Str.)	954 (45/7) – 954 (54/7)	12 (304.8)	3.8 (1.72)
HVS2C119618	1.165 – 1.196	1033.5 (37 Str.) – 1033.5 (61 Str.)	954 (45/7) – 954 (54/7)	18 (457.2)	4.2 (1.93)
HVS2C12468	1.209 – 1.263	1100 (91 Str.) – 1200 (91 Str.)	1033.5 (45/7) – 1113 (45/7)	8 (203.2)	3.7 (1.68)
HVS2C124612	1.209 – 1.263	1100 (91 Str.) – 1200 (91 Str.)	1033.5 (45/7) – 1113 (45/7)	12 (304.8)	3.9 (1.77)
HVS2C124618	1.209 – 1.263	1100 (91 Str.) – 1200 (91 Str.)	1033.5 (45/7) – 1113 (45/7)	18 (457.2)	4.3 (1.98)

EHV BOLTED CONDUCTOR SPACERS TYPE HVS2C/EVS2C (CONTINUED)

345 kV AND 500 kV LINE-TO-LINE APPLICATIONS

CATALOG NUMBER	ALUMINUM CONDUCTOR RANGE			DIM – IN (MM)	APPROX. WT. EA. LBS. (KG)
	DIAMETER IN.	AAC (MIN. MAX.)	ACSR (MIN. MAX.)	C	
345 KV APPLICATION					
HVS2C12998	1.258 – 1.300	1192 (61 Str.) – 1272 (61 Str.)	1113 (45/7) – 1113 (54/19)	8 (203.2)	3.8 (1.75)
HVS2C129912	1.258 – 1.300	1192 (61 Str.) – 1272 (61 Str.)	1113 (45/7) – 1113 (54/19)	12 (304.8)	4.0 (1.81)
HVS2C129918	1.258 – 1.300	1192 (61 Str.) – 1272 (61 Str.)	1113 (45/7) – 1113 (54/19)	18 (457.2)	4.4 (2.00)
HVS2C13828	1.345 – 1.385	1400 (91 Str.) – 1431 (61 Str.)	1272 (45/7) – 1351.5 (45/7)	8 (203.2)	3.7 (1.68)
HVS2C138212	1.345 – 1.385	1400 (91 Str.) – 1431 (61 Str.)	1272 (45/7) – 1351.5 (45/7)	12 (304.8)	3.9 (1.77)
HVS2C138218	1.345 – 1.385	1400 (91 Str.) – 1431 (61 Str.)	1272 (45/7) – 1351.5 (45/7)	18 (457.2)	4.2 (1.93)
HVS2C14658	1.412 – 1.466	1500 (91 Str.) – 1600 (127 Str.)	1351 (54/19) – 1510 (45/7)	8 (203.2)	3.6 (1.66)
HVS2C146512	1.412 – 1.466	1500 (91 Str.) – 1600 (127 Str.)	1351 (54/19) – 1510 (45/7)	12 (304.8)	3.8 (1.72)
HVS2C146518	1.412 – 1.466	1500 (91 Str.) – 1600 (127 Str.)	1351 (54/19) – 1510 (45/7)	18 (457.2)	4.1 (1.85)
HVS2C15458	1.502 – 1.545	1700 (127 Str.) – 1750 (127 Str.)	1590 (45/7) – 1590 (54/19)	8 (203.2)	3.7 (1.68)
HVS2C154512	1.502 – 1.545	1700 (127 Str.) – 1750 (127 Str.)	1590 (45/7) – 1590 (54/19)	12 (304.8)	3.9 (1.77)
HVS2C154516	1.502 – 1.545	1700 (127 Str.) – 1750 (127 Str.)	1590 (45/7) – 1590 (54/19)	16 (406.4)	4.1 (1.85)
HVS2C154518	1.502 – 1.545	1700 (127 Str.) – 1750 (127 Str.)	1590 (45/7) – 1590 (54/19)	18 (457.2)	4.2 (1.93)
500 KV APPLICATION					
EVS2C16507	1.602 – 1.650	2000 (91 Str.) – 2000 (127 Str.)	1780 (84/19)	7 (177.8)	3.9 (1.77)
EVS2C16508	1.602 – 1.650	2000 (91 Str.) – 2000 (127 Str.)	1780 (84/19)	8 (203.2)	4.0 (1.81)
EVS2C165012	1.602 – 1.650	2000 (91 Str.) – 2000 (127 Str.)	1780 (84/19)	12 (304.8)	4.2 (1.93)
EVS2C165018	1.602 – 1.650	2000 (91 Str.) – 2000 (127 Str.)	1780 (84/19)	18 (457.2)	4.5 (2.04)
EVS2C168118	1.681	-	2034.5 (72/7)	18 (457.2)	4.5 (2.04)
EVS2C172912	1.682 – 1.729	2250 (91 Str.)	-	12 (304.8)	4.1 (1.85)
EVS2C172918	1.682 – 1.729	2250 (91 Str.)	-	18 (457.2)	4.5 (2.04)
EVS2C17629	1.737 – 1.762	-	2167 (72/7) – 2156 (84/19)	8 (203.2)	3.9 (1.77)
EVS2C176212	1.737 – 1.762	-	2167 (72/7) – 2156 (84/19)	12 (304.8)	4.1 (1.85)
EVS2C176218	1.717 – 1.762	-	2167 (72/7) – 2156 (84/19)	18 (457.2)	4.5 (2.04)
EVS2C18248	1.763 – 1.824	2500 (91 Str.) – 2500 (127 Str.)	-	8 (203.2)	3.8 (1.75)
EVS2C182412	1.763 – 1.824	2500 (91 Str.) – 2500 (127 Str.)	-	12 (330.2)	4.0 (1.81)
EVS2C182418	1.763 – 1.824	2500 (91 Str.) – 2500 (127 Str.)	-	18 (457.2)	4.4 (2.00)

SUBSTATION SPECIALTIES

EHV BOLTED CONDUCTOR SPACERS TYPE EVS3C

ALUMINUM
EVS3C

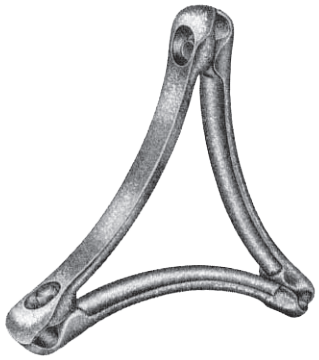

Aluminum alloy spacers for three cables are designed for corona free service at 500 KV. The cable grooves are fully rounded at entry to prevent conductor damage. *Not for use on overhead transmission lines.*

Material: **Casting** – 356-T6 aluminum alloy
Bolts, Nuts and Lockwashers – aluminum alloy

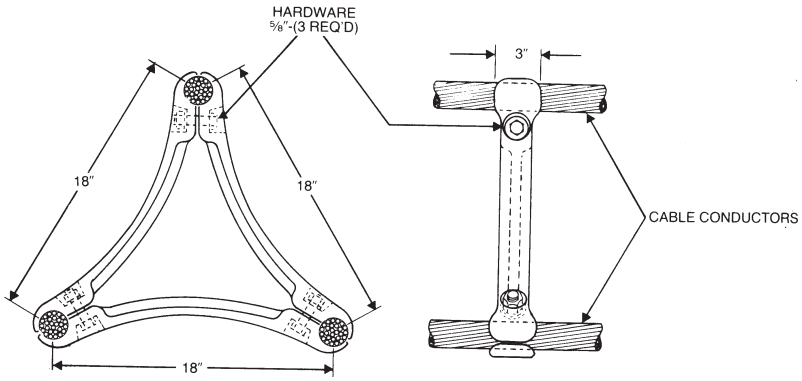

500 kV LINE-TO-LINE APPLICATIONS

CATALOG NUMBER	ALUMINUM CONDUCTOR RANGE			APPROX. WT. EA. LBS. (KG)
	DIAMETER IN.	AAC	ACSR	
EVS3C1196	1.165 – 1.196	1033.5 (37 Str.) – 1033.5 (61 Str.)	954 (45/7) – 954 (54/7)	10.9 (4.94)
EVS3C1246	1.209 – 1.263	1100 (91 Str.) – 1200 (91 Str.)	1033.5 (45/7) – 1113 (45/7)	10.4 (4.72)
EVS3C1299	1.258 – 1.300	1192 (61 Str.) – 1272 (61 Str.)	1113 (45/7) – 1113 (54/19)	10.4 (4.72)
EVS3C1382	1.345 – 1.385	1400 (91 Str.) – 1431 (61 Str.)	1272 (45/7) – 1351.5 (45/7)	10.4 (4.72)
EVS3C1465	1.412 – 1.466	1500 (91 Str.) – 1600 (127 Str.)	1351.5 (54/19) – 1510 (45/7)	10.4 (4.72)
EVS3C1650	1.602 – 1.650	2000 (91 Str.) – 2000 (127 Str.)	1780 (84/19)	10.5 (4.76)
EVS3C1762	1.737 – 1.762	-	2167 (72/7) – 2156 (84/19)	11.4 (5.17)
EVS3C1824	1.763 – 1.824	2500 (91 Str.) – 2500 (127 Str.)	-	11.4 (5.17)

SUBSTATION SPECIALTIES

EHV CABLE SPACER TERMINALS TYPE HVS2CT/EVS2CT

ALUMINUM
HVS2CT/ EVS2CT

Aluminum alloy spacer terminals are designed for corona free service at 345 and 500 KV respectively. Cable spacing other than shown may be ordered by changing catalog number suffix. (example: HVS2C-1036-18 for 1.036" diameter cable at 18" center line to center line.) For 90˚ terminal pads add suffix –90 to catalog number (example: HVS2CT-1036-12-90).

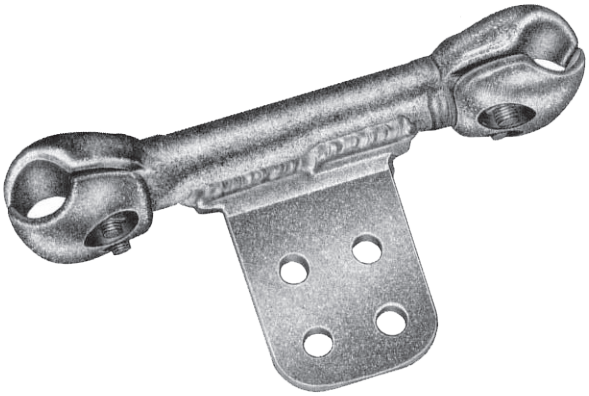

Material:
- **Casting** – 356-T6 aluminum alloy
- **Spacer Tube** – aluminum alloy
- **Pad** – aluminum alloy
- **Bolts, Nuts and Lockwashers** – aluminum alloy.
- **Hardware Retaining Grommet** – neoprene

Note: Extended pad is *not corona free* unless it is protected by equipment rings or hardware shields. For limited current use like lightning arrester tap.

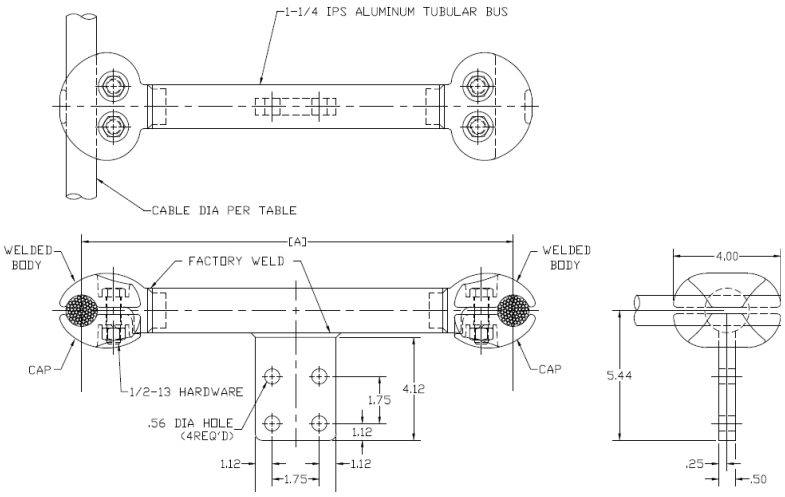

345 KV AND 500 kV LINE-TO-LINE APPLICATIONS

CATALOG NUMBER	ALUMINUM CONDUCTOR RANGE			DIM – IN (MM)	APPROX. WT. EA. LBS. (KG)
	DIAMETER IN.	AAC (MIN. MAX.)	ACSR (MIN. MAX.)	A	
345 KV APPLICATIONS					
HVS2CT103610	1.019 – 1.036	795 (37 Str.) – 800 (61 Str.)	636 (30/19) – 715.5 (54/7)	10 (254)	4.4 (2.00)
HVS2CT103612	1.019 – 1.036	795 (37 Str.) – 800 (61 Str.)	636 (30/19) – 715.5 (54/7)	12 (305)	4.6 (2.07)
HVS2CT110810	1.070 – 1.108	874.5 (37 Str.) – 900 (61 Str.)	715.5 (30/19) – 795 (54/7)	10 (254)	5.1 (2.30)
HVS2CT110812	1.070 – 1.108	874.5 (37 Str.) – 900 (61 Str.)	715.5 (30/19) – 795 (54/7)	12 (305)	5.3 (2.39)
HVS2CT110818	1.070 – 1.108	874.5 (37 Str.) – 900 (61 Str.)	715.5 (30/19) – 795 (54/7)	18 (457)	5.4 (2.43)
HVS2CT116212	1.124 – 1.162	954 (37 Str.) – 1000 (61 Str.)	900 (45/7) – 900 (54/7)	12 (305)	5.4 (2.43)
HVS2CT116218	1.124 – 1.162	954 (37 Str.) – 1000 (61 Str.)	900 (45/7) – 900 (54/7)	18 (457)	5.2 (2.34)

EHV CABLE SPACER TERMINALS TYPE HVS2CT/EVS2CT (CONTINUED)

345 KV AND 500 kV LINE-TO-LINE APPLICATIONS

CATALOG NUMBER	ALUMINUM CONDUCTOR RANGE			DIM – IN (MM)	APPROX. WT. EA. LBS. (KG)
	DIAMETER IN.	AAC (MIN. MAX.)	ACSR (MIN. MAX.)	C	
345 KV APPLICATIONS					
HVS2CT119610	1.165 – 1.196	1033.5 (Str.) – 1033.5 (Str.)	954 (45/7) – 954 (54/7)	10 (254)	5.7 (2.57)
HVS2CT119612	1.165 – 1.196	1033.5 (Str.) – 1033.5 (Str.)	954 (45/7) – 954 (54/7)	12 (305)	5.4 (2.43)
HVS2CT119618	1.165 – 1.196	103.35 (Str.) – 1033.5 (Str.)	954 (45/7) – 954(54/7)	18 (457)	5.7 (2.57)
HVS2CT124610	1.209 – 1.263	1100 (91 Str.) – 1200 (91 Str.)	1033.5 (45/7) – 1113 (45/7)	10 (254)	5.5 (2.48)
HVS2CT124612	1.209 – 1.263	1100 (91 Str.) – 1200 (91 Str.)	1033.5 (45/7) – 1113 (45/7)	12 (305)	5.3 (2.39)
HVS2CT129910	1.258 – 1.300	1192 (61 Str.) – 1272 (61 Str.)	1113 (45/7) – 1113 (54/19)	10 (254)	5.4 (2.43)
HVS2CT129912	1.258 – 1.300	1192 (61 Str.) – 1272 (61 Str.)	1113 (45/7) – 1113 (54/19)	12 (305)	5.6 (2.52)
HVS2CT138212	1.345 – 1.385	1400 (91 Str.) – 1431 (61 Str.)	1272 (45/7) – 1351.5 (45/7)	12 (305)	5.5 (2.48)
HVS2CT146510	1.412 – 1.466	1500 (91 Str.) – 1600 (127 Str.)	1351.5 (54/19) – 1510 (45/7)	10 (254)	5.3 (2.39)
HVS2CT146512	1.412 – 1.466	1500 (91 Str.) – 1600 (127 Str.)	1351.5 (54/19) – 1510 (45/7)	12 (305)	5.4 (2.43)
HVS2CT146518	1.412 – 1.466	1500 (91 Str.) – 1600 (127 Str.)	1351.5 (54/19) – 1510 (45/7)	18 (457)	5.7 (2.57)
HVS2CT154512	1.502 – 1.545	1700 (127 Str.) – 1750 (127 Str.)	1590 (45/7) – 1590 (54/19)	12 (305)	5.5 (2.48)
HVS2CT154518	1.502 – 1.545	1700 (127 Str.) – 1750(127 Str.)	1590 (45/7) – 1590 (54/19)	18 (457)	5.7 (2.57)
500 KV APPLICATION					
EVS2CT165012	1.602 – 1.650	2000 (91 Str.) – 2000 (127 Str.)	1780 (84/19)	12 (305)	5.9 (2.66)
EVS2CT165018	1.602 – 1.650	2000 (91 Str.) – 2000 (127 Str.)	1780 (84/19)	18 (457.2)	6.1 (2.75)
EVS2CT172918	1.682 – 1.729	2250 (91 Str.)	-	18 (457)	6.0 (2.70)
EVS2CT176212	1.737 – 1.762	-	2167 (72/7) – 2156 (84/19)	12 (305)	5.7 (2.57)
EVS2CT176218	1.737 – 1.762	-	2167 (72/7) – 2156 (84/19)	18 (457)	6.0 (2.70)
EVS2CT182412	1.763 – 1.824	2500 (91 Str.) – 2500 (127 Str.)	-	12 (305)	5.6 (2.52)
EVS2CT182418	1.763 – 1.824	2500 (91 Str.) – 2500 (127 Str.)	-	18 (457)	6.0 (2.70)

SUBSTATION SPECIALTIES

EHV PARALLEL CONNECTORS TYPE HVPC/EVPC

ALUMINUM
HVPC/EVPC

Aluminum alloy parallel connectors are designed for corona free service at 345 and 500 KV respectively. Single cable diameter under 1.76 inch for 345 KV and 2.5 inch diameter for 500 KV may not be corona free unless conductors are bundled. Contact sealant is recommended.

Material: **Casting** – 356-T6 aluminum alloy
Clamping Hardware – aluminum alloy
Hardware Retaining Grommet – neoprene

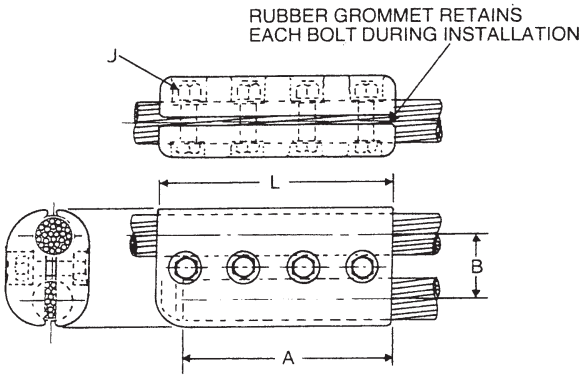

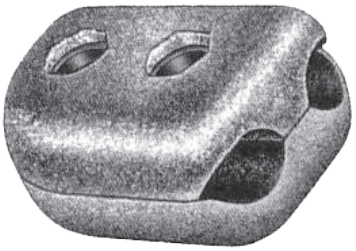

345 KV AND 500 kV LINE-TO-LINE APPLICATIONS

CATALOG NUMBER	ALUMINUM CONDUCTOR RANGE (MAIN & TAP)			DIMENSIONS – INCHES (MM)				NUMBER OF BOLTS	APPROX. WT. EA. LBS. (KG)
	DIA. IN.	AAC	ACSR	B	L	A	J		
345 KV LINE-TO-LINE APPLICATIONS									
HVPC10361036	1.036	795 (37 Str./ 61 Str.)	715.5 (54/7)	2-1/4 (57.15)	5-3/4 (146.05)	3-7/8 (98.43)	5/8 (15.88)	2	4.0 (1.81)
HVPC11081108	1.108	–	795 (26/7)	2-1/4 (57.15)	5-3/4 (146.05)	3-7/8 (98.43)	5/8 (15.88)	2	4.0 (1.81)
HVPC13001300	1.300	1272 (61 Str.)	-	2-1/4 (57.15)	5-3/4 (146.05)	3-7/8 (98.43)	5/8 (15.88)	2	4.0 (1.81)
HVPC13821382	1.382	–	1272 (54/19)	2-1/4 (57.15)	5-3/4 (146.05)	3-7/8 (98.43)	5/8 (15.88)	2	4.0 (1.81)
500 KV LINE-TO-LINE APPLICATIONS									
EVPC11961196	1.196	–	954 (54/7)	2-13/16 (71.44)	10 (254.00)	7-1/2 (190.50)	5/8 (15.88)	4	8.7 (3.95)
EVPC12591259	1.259	–	1113 (45/7)	2-13/16 (71.44)	10 (254.00)	7-1/2 (190.50)	5/8 (15.88)	4	8.7 (3.95)
EVPC13821382	1.382	–	1272 (54/7)	2-13/16 (71.44)	10 (254.00)	7-1/2 (190.50)	5/8 (15.88)	4	8.7 (3.95)
EVPC14651465	1.465	–	1431 (54/19)	2-13/16 (71.44)	10 (254.00)	7-1/2 (190.50)	5/8 (15.88)	4	8.7 (3.95)
EVPC15451545	1.545	–	1590 (54/19)	2-13/16 (71.44)	10 (254.00)	7-1/2 (190.50)	5/8 (15.88)	4	8.7 (3.95)
EVPC16321632	1.632	2000 (91 Str.)		2-13/16 (71.44)	10 (254.00)	7-1/2 (190.50)	5/8 (15.88)	4	8.7 (3.95)
EVPC16811681	1.681	–	2034.5 (72/7)	2-13/16 (71.44)	10 (254.00)	7-1/2 (190.50)	5/8 (15.88)	4	8.7 (3.95)
EVPC17621762	1.762	–	2156 (84/19)	2-13/16 (71.44)	10 (254.00)	7-1/2 (190.50)	5/8 (15.88)	4	8.7 (3.95)
EVPC18021802	1.802	–	2312 (76/19)	2-13/16 (71.44)	10 (254.00)	7-1/2 (190.50)	5/8 (15.88)	4	8.7 (3.95)
EVPC18241824	1.824	2500 (127 Str.)		3-1/8 (79.38)	10 (254.00)	7-1/2 (190.50)	5/8 (15.88)	4	9.0 (4.09)

Contact factory for sizes not shown.

SUBSTATION SPECIALTIES

EHV HARDWARE SHIELDS TYPE EVHS

ALUMINUM
EVHS

Aluminum alloy hardware shields for flat pad are designed for corona free service at 500 KV. The EVHS is a cast, one piece shield for easy installation. The EVHS-D may also be used to shield a 3 inch by 3 inch contact pad, providing adequate clearance is allowed. The catalog numbers provide one shield only without hardware.

Material: **Shield** – 356-T6 aluminum alloy

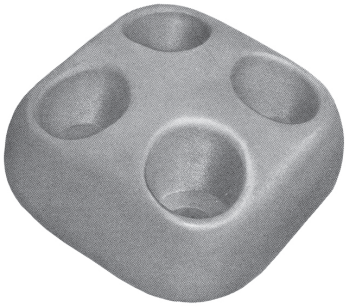

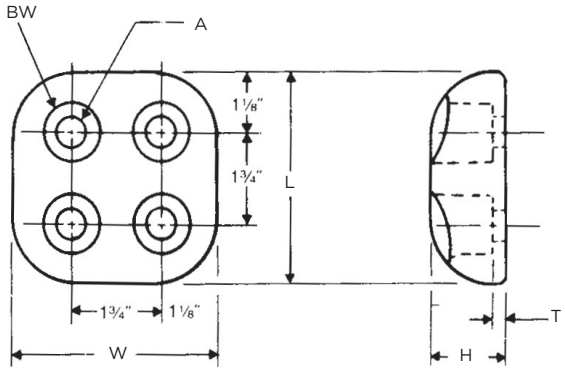

Figure 1

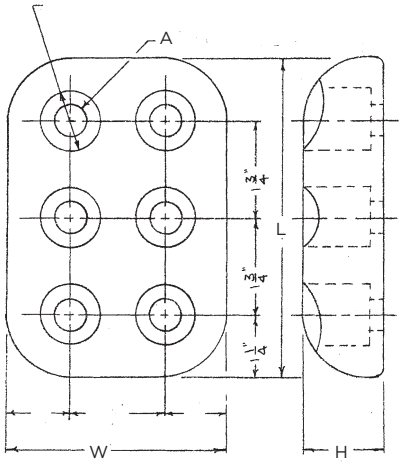

Figure 3

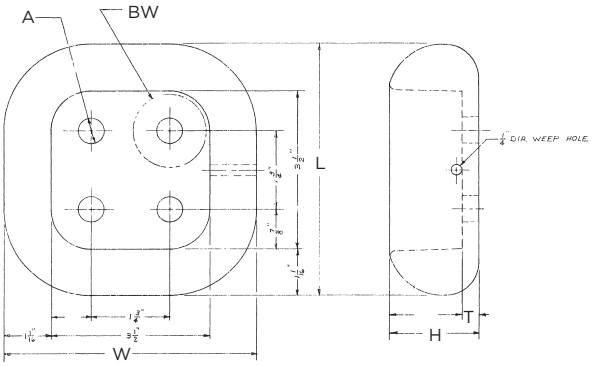

Figure 2

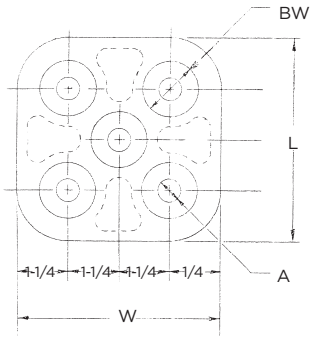

Figure 4

345 KV AND 500 kV LINE-TO-LINE APPLICATIONS

CATALOG NUMBER	FIG	A HOLE DIA.	PAD APPLICATIONS	H	BOLT WELL DIA *	W	T	L	APPROX. WT. EA. LBS. (KG)
EVHSD	1	9/16"	4" x 4" (101.60)	1-1/2 (38.1)	1-3/16	4 (101.60)	1/4 (6.35)	4 (101.60)	.9 (.41)
EVHSDBW15	2	9/16"	4" X 4" (101.60)	2 (50.8)	1-11/16	5-5/8 (142.88)	3/8	5-5/8 (142.88)	2.8 (1.27)
EVHSN	3	9/16"	4" X 6" (101.6 x 152.4)	1-1/2 (38.1)	1-1/8	4 (101.60)	1/4 (6.35)	6 (152.40)	1.4 (.64)
EVHSK	4	11/16"	5" x 5" (127)	1-11/16 (42.93)	1-3/8	5 (127.00)	1/4 (6.35)	5 (127.00)	1.9 (.86)

** At bottom of bolt well.*

SUBSTATION SPECIALTIES

EHV HARDWARE SHIELDS TYPE HVHS-90-D

ALUMINUM
HVHS-90-D

Aluminum alloy 90˚ hardware shield for flat pads are designed for corona free service at 345 KV. The HVHS-90-D is a cast, one piece shield for easy installation. This shield is used to shield hardware and provide protection to a 90˚ flat connection. The catalog numbers provide one shield only without hardware. Normally used in sets of two (2).

Material: **Shield** – 356-T6 aluminum alloy

Note: Maximum washer clearance is 11/4".

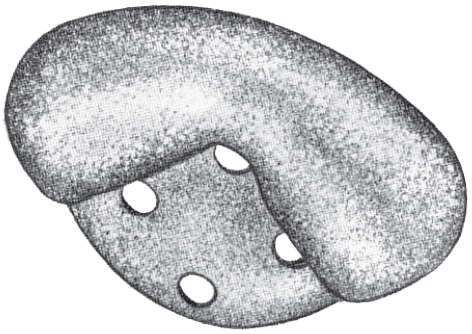

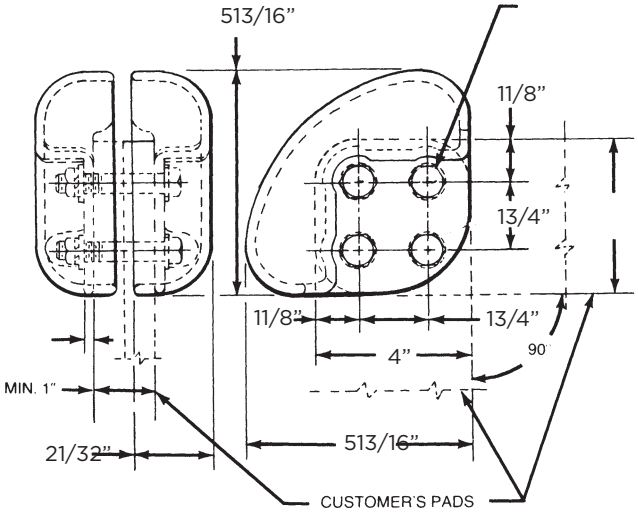

345 KV LINE-TO-LINE APPLICATIONS

CATALOG NUMBER	PAD APPLICATION	APPROX. WT. EA. LBS. (KG)
HVHS90D	4" x 4" (101.60)	1.2 (.54)

SUBSTATION SPECIALTIES

EHV EXTENSION PAD TYPE EVEF-D

ALUMINUM
EVEFD

Aluminum alloy extension pad is designed for corona free service at 500 KV. This connector can be used in conjunction with Type EVETF terminal connector where additional pad clearance is required. Contact sealant is recommended.

Material: **Shield** – 356-T6 aluminum alloy

Note: To assure corona free operation of extension terminal, bolts must be inserted from extension terminal side and nuts on equipment pads must be protected by equipment or hardware shields (see Type EVHS-D).

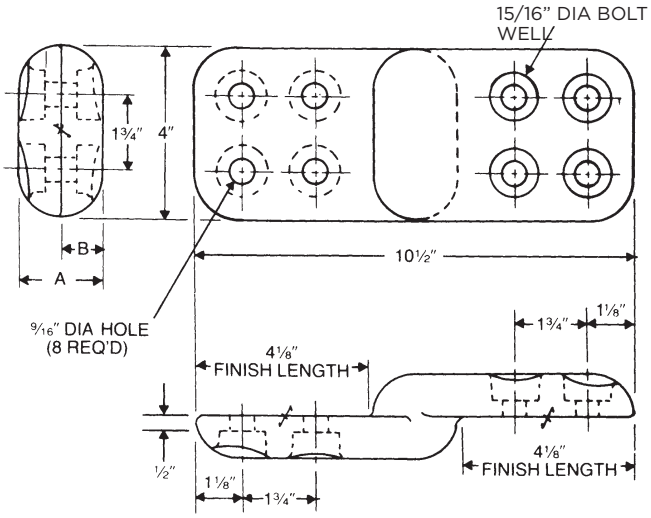

EHV 80

345 KV AND 500 kV LINE-TO-LINE APPLICATIONS

CATALOG NUMBER	PAD APPLICATION	DIMENSIONS IN INCHES		APPROX. WT. EA. LBS. (KG)
		A	B	
EVEFD	4" x 4" Each End (101.60)	3 (76.20)	1-1/2 (38.10)	4.7 (2.13)

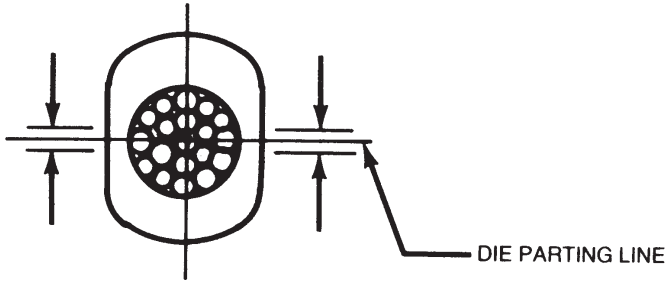

CRIMPING DETAIL

TECHNICAL DATA

DIE REFERENCE CHART CC-4872

CONVENTIONAL COMPRESSION TOOL AND DIE INFORMATION FOR TYPE CCL-EHV

DIE REF.	INDEX	BURNDY TOOLS, DIES & NUMBER OF CRIMPS										KEARNEY TOOLS, DIES & NO. OF CRIMPS							ALCOA TOOLS, DIES & NUMBER OF CRIMPS							
		Y34A		Y35		Y48B		Y486RB		Y60B		DIE SIZE	WH-1		WH-2		PH-60		12A, 12HA		B		60A		F1,H,H2,H2H	
		DIES	CR.	DIES	CR.	DIES	CR.	DIES	CR.	DIES	CR.		DIES	CR.	DIES	CR.	DIES	CR.	DIES	CR.	DIES	CR.	DIES	CR.	DIES	CR.
.640	243	A243	3	U243	3	C243	2			L243		5/8	18865	7					B73AH	2						
.840	249	A249	4	U249	4	C249	2			L249		.840	18868	7	36476	7			B74AH	2						
1.000	251	A251	6	U251	6	C251	3	F251		L251		1.000	26565	4	36465	4			B75AH	3	75A	2				
1.125	490-547 316	A490 A316	6 6	U490 U316	6 6	C490 C316	3 2	F490 F316	3 2	L490 L316		11/8	20636	6	36463	5			B76AH	4						
1.312	327 317-426 300			U327 U317 U34ART	7 7 10	C327 C317 C34AR	3 3 5	F327 F317 F34AR	3 3 5	L327 L317		15/16			40424	7								6020AH	2	4420AH	2
1.500	318-261 608			U261* U608*	7 7	C261 C608	3 3	F261 F608	3 3	L261 L608							K6024AH	2					6024 6024AH	3 3	4424 4424AH	2 2
1.625	301					C39AR	4	F39AR	4	L724 L39ART							K6027AH	2					6026 6027AH	3 3	4426 4427AH	2 2
1.843	292-578 302 319					C292 C44AR C319	3 4 3	F292 F44AR F319	3 4 3	L292 L44ART L319							K6030AH	2					6028 6030AH	3 3	4428 4430AH	3 4
2.125	422 575					C575	4	F422 F575	4 4	1.422 1.575							K6034AH	4					6034AH	4	4429 4434AH	3 4
2.375	478							F46AR	4								K6036AH	4					6031 6036AH	4 4	4431 4436AH	3 4
2.937																									C3655-3 4448AH	3 4

NOTES:

1. The recommended number of crimps per connector is shown following each die number.
2. It is recommended that a light coat of lubricant (such as Anderson's #155 Grease) be applied to the crimping face of the dies.
3. Crimps should start from the inside working outward with the last crimp extending past the end of the connector.
** For use on aluminum connectors ONLY.*

TECHNICAL DATA

DIE REFERENCE CHART
C-13282

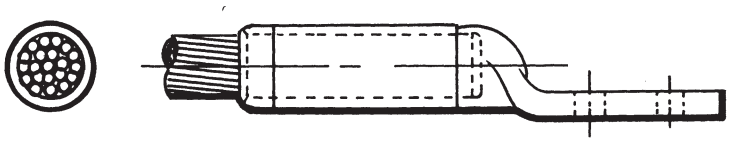

CONVENTIONAL COMPRESSION TOOL AND DIE INFORMATION FOR TYPE CCLS-EHV

	BURNDY TOOLS & DIES						ANDERSON	ALCOA TOOLS & DIES		
DIE REF.	INDEX	Y34A	735	748B	7486RB	Y60B	VC TOOLS	12A, 12HA	60A	F1, H, H2, H2H
1.625	301			C39AR	F39AR	L39ART	VC 8		6027AH	4427AH
1.844	302			C44AR	F44AR	L44ART	VC 8		6030AH	4430AH
2.062	479				F48AR	L48ART			6034AH	4434AH
2.375	478			C46AR	F46AR	L46ART			6038AH	4438AH
2.625										4442AH
2.750										4444AH

Notes:

1. It is recommended that a light coat of lubricant (such as Anderson's No. 155 grease) be applied to the crimping face of the dies.
2. For Alcoa and Burndy tooling, crimps should start from inside crimp line, work outwards with the crimps overlapped, and the last crimp extending past the end of the connectors.
3. For Anderson VC tooling, crimps should start from inside crimp line, work outwards with the crimps spaced 1/8" aprt, and the last crimp spaced 1/4" from the end of barrel.
4. VC tools not recommended for extra high voltage.

TECHNICAL DATA

INSTALLATION CHART
DC-9295
FOR TYPES EVKET AND HVWETT/EVWETT

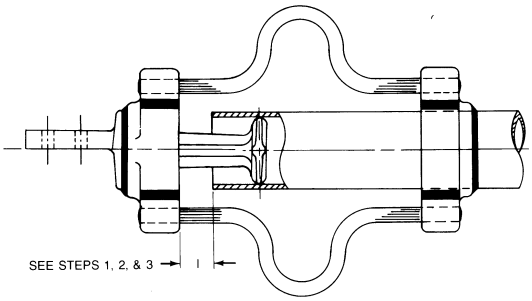

TYPICAL FLEXIBLE TERMINAL

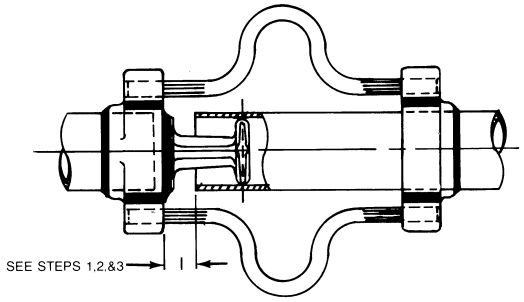

TYPICAL FLEXIBLE COUPLER

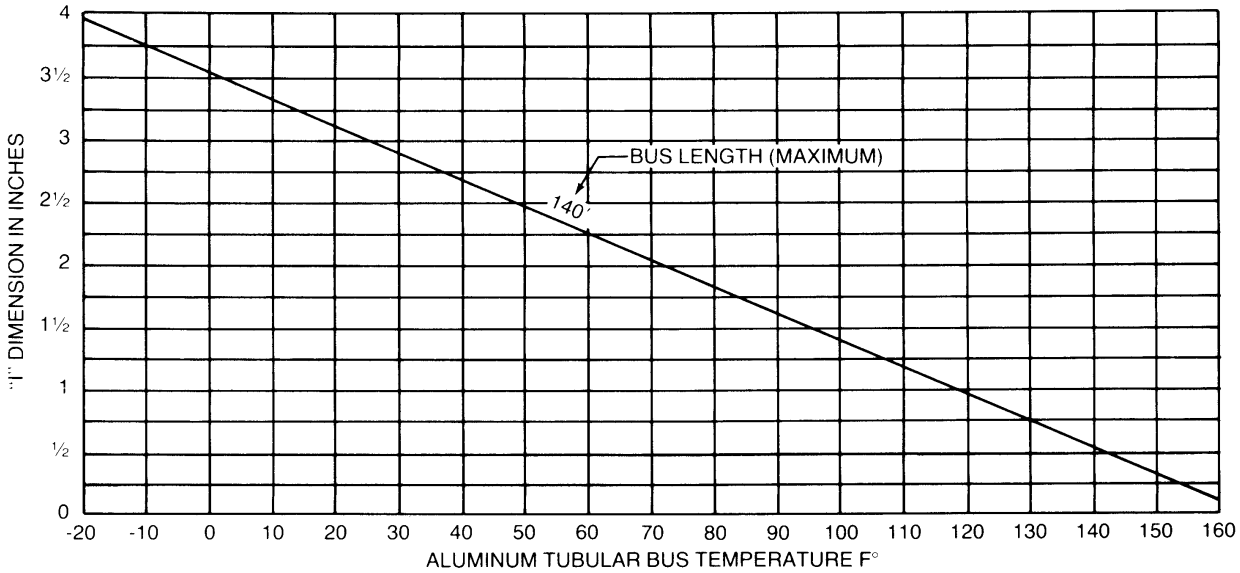

HOW TO USE CHART

1. Determine tubular bus temperature and locate on temperature scale.
2. Using 140 ft. bus length, locate the intersection of the bus length and the temperature reading.
3. Read "I" dimensions setting from this intersection point.
4. Total tubular bus length must not exceed 140 feet.

TECHNICAL DATA

INSTALLATION CHART DC-11853 FOR TYPES HVRTE

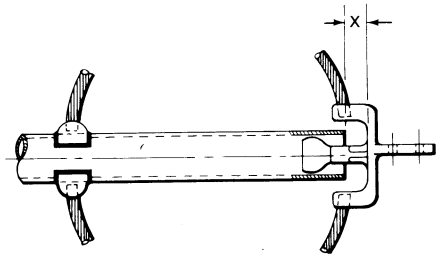

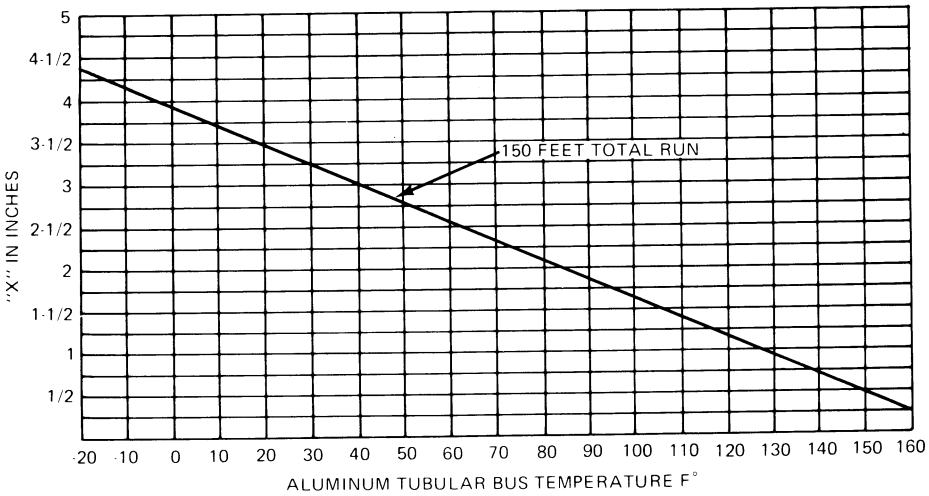

DC-6750 FOR TYPES HVETF/EVETF

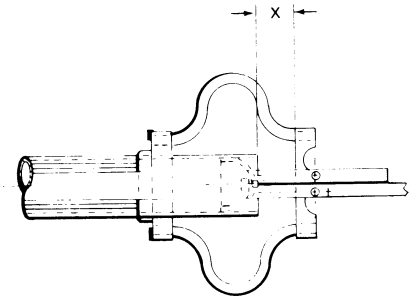

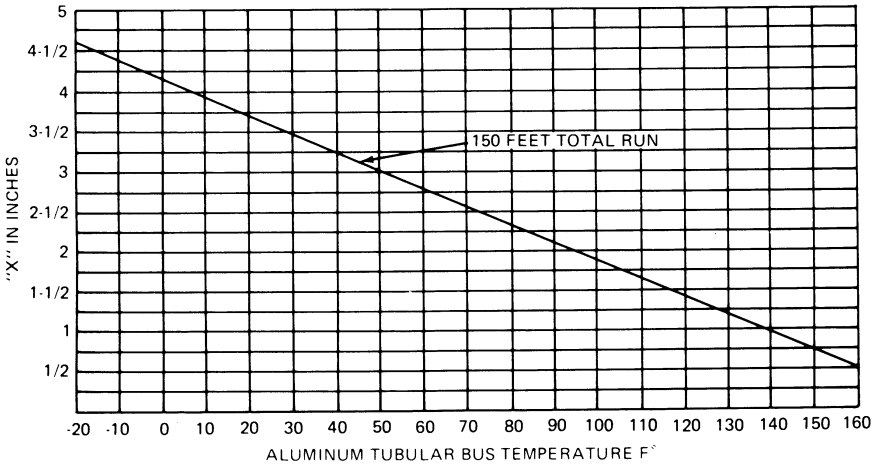

HOW TO USE CHARTS

1. Determine tubular bus temperature and locate on the temperature scale.
2. Using given bus length, locate the intersection of the bus length and the temperature reading.
3. Read "X" dimensions setting from this intersection point.

TECHNICAL DATA

INSTALLATION CHART DC-11852 FOR TYPE HVRTS

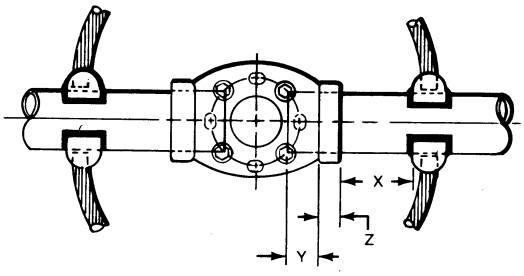

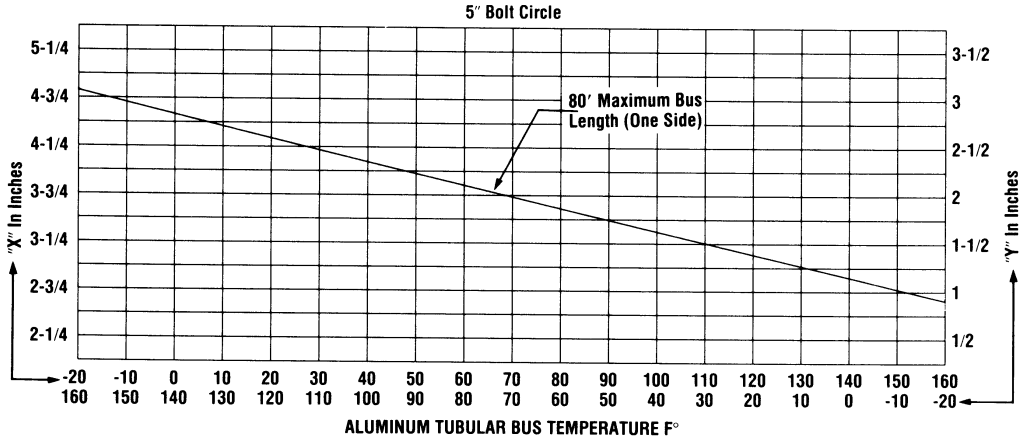

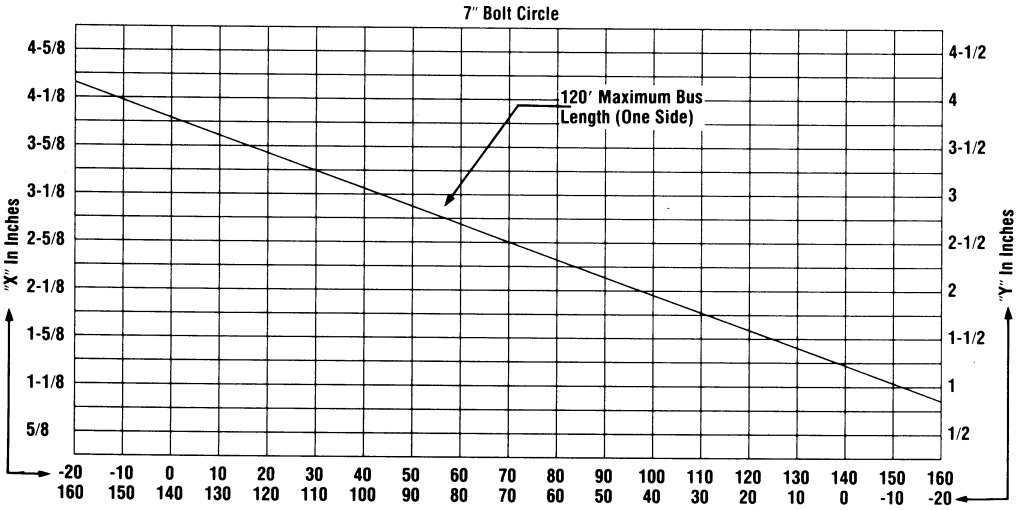

HOW TO USE CHARTS

1. Determine tubular bus temperature and locate this temperature on the "Temperature Reading For "X" dimension scale.
2. Using given bus length for one side of the connector, locate the intersection of the bus length and the temperature reading.
3. Read "X" dimension setting from this intersection point.
4. Determine "Y" dimension in a similar manner.
5. Determine "Z" dimension from applicable ANDERSON Assembly Dwg. The location of the tube-shunt body from the end of the tube may be determined by adding X + Y + Z.
6. Repeat this procedure for the tubular bus on the other side of the connector.

TECHNICAL DATA

INSTALLATION CHART
DC-6536
FOR TYPES EVKES, HVETS/EVETS

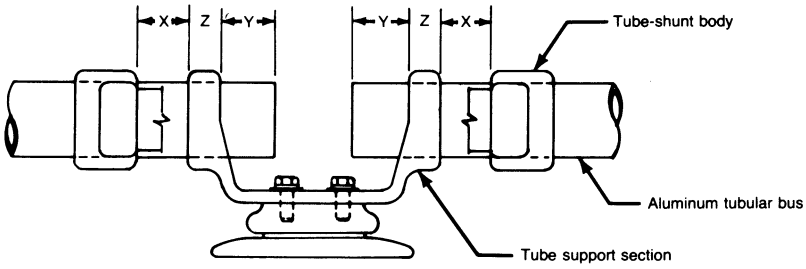

TYPICAL FLEXIBLE BUS SUPPORT

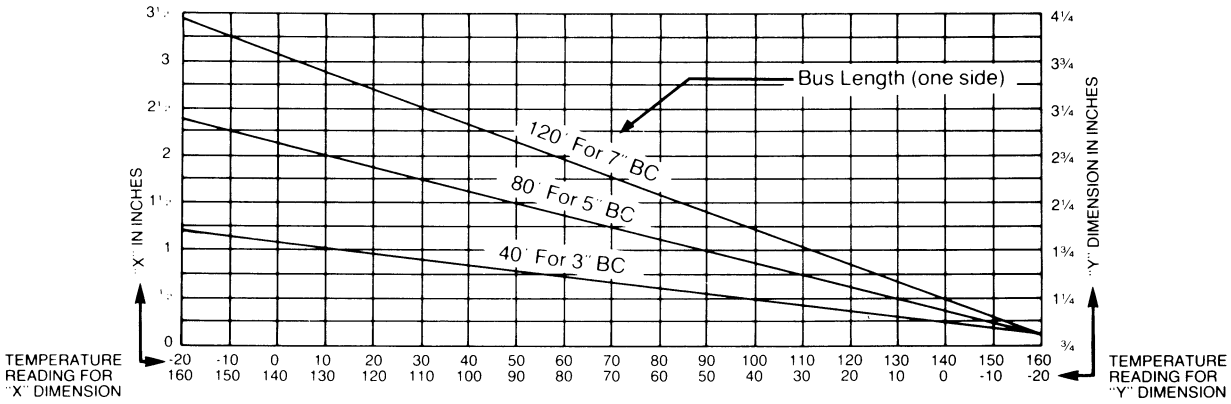

HOW TO USE CHART

1. Determine tubular bus temperature and locate this temperature on the "Temperature Reading for "X" Dimension" scale.
2. Locate the intersection of the given bus length and the temperature reading.
3. Read "X" dimension setting from this intersection point.
4. Determine "Y" dimension in a similar manner.
5. Determine "Z" dimension from applicable ANDERSON connector assembly. The location of the tube-shunt body from the end of the tube may be determined by adding X + Y + Z.
6. Repeat this procedure for the tubular bus on the other side of the connector.
7. Do not exceed given bus length for each particular bolt circle.

TECHNICAL DATA

INSTALLATION CHART DC-6788 FOR TYPES HVEDST/EVEDST

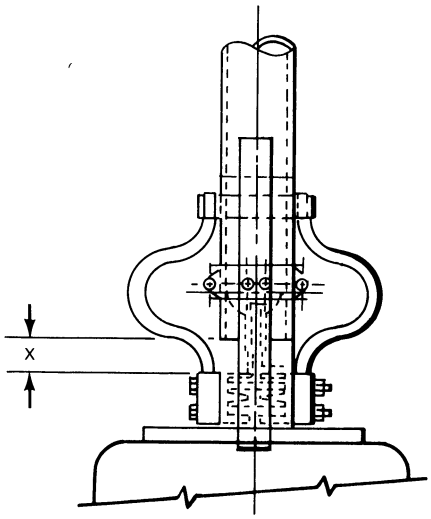

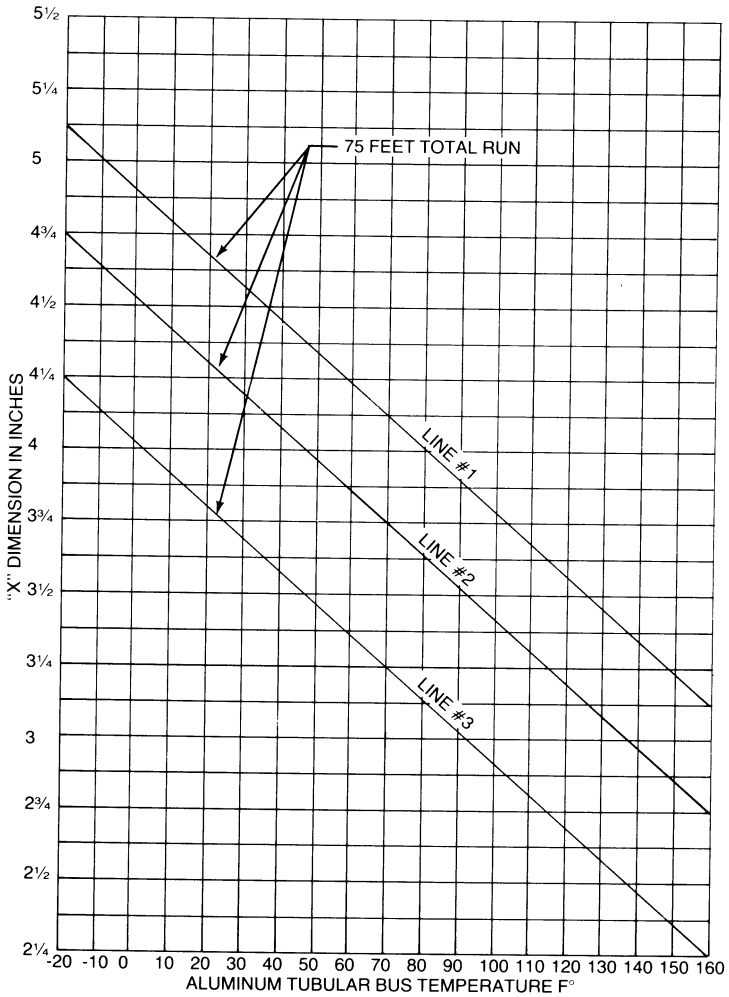

TECHNICAL DATA

INSTALLATION CHART
DC-6790
FOR TYPES HVEDST-90/EVEDST-90

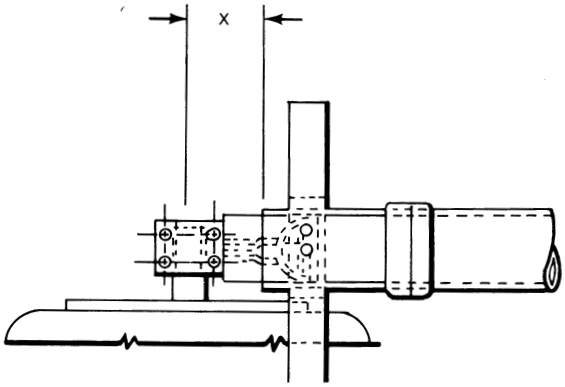

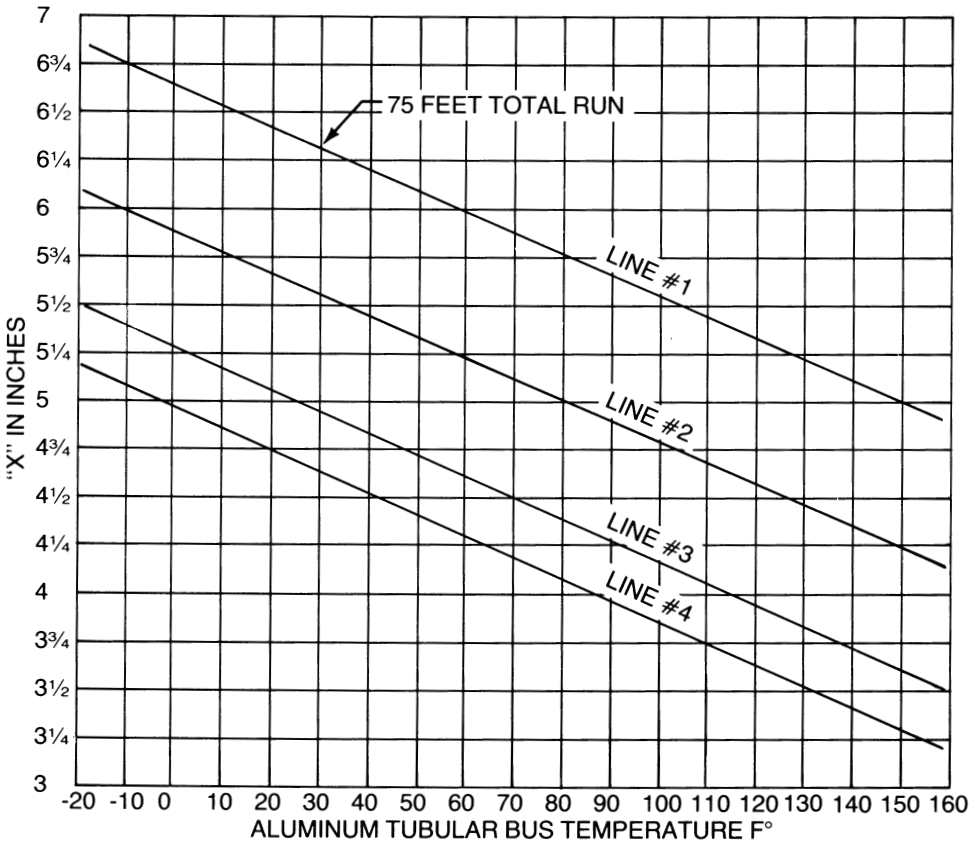

EHV SUBSTATION CONNECTORS- TECHNICAL REFERENCE

Nature of Corona and RIV

Corona is the primary element which must be considered and controlled when designing connectors for Extra High Voltage applications. Corona is a result of a condition where the electrostatic flux density in the air exceeds a critical value near an adjacent metal surface. Air and other vapors in this area become ionized and serve as a conductor of electricity. When the voltage is increased, a brush discharge takes place, until the whole thickness of the dielectric layer is broken down and disruptive discharges (sparks) jump from electrode to electrode. Corona involves power loss, radio noise and can have an injurious effect on fibrous insulation. Sharp edges, bubbles, nonhomogeneous insulation, etc., aggravate this condition.

Positive corona can be seen as a plume and is the principal source of radio influence voltage (RIV). Negative corona is seen as a glow and has no significant radio influence. EHV connectors must be free of audible and visible corona at the rated line voltage plus ten percent. At these voltage levels the RIV level should not exceed 200 microvolts.

Design Criteria

The design of Extra High Voltage connectors and fittings must meet critical field gradient configurations in conjunction with the mechanical and/or electrical load carrying requirements. Failure to meet this prerequisite can result in unacceptable visible or audible corona.

We control corona on substation connectors by providing recessed hardware, generous mass and radii, high quality surface finish, and shielding rings. Any or all of these designs could be used in any given application requirement. All Extra High Voltage components are manufactured within our facilities, utilizing proven production techniques. These procedures plus final assembly, inspection and packaging, are geared to preserve quality and acceptable connector performance.

As a result of our design efforts, testing and experience, EHV connectors and connector assemblies are free of audible and visible brush type corona at voltages ten percent above rated system operating voltages.

Years of experience in the EHV substation connector field has indicated it is most advantageous to the purchaser to obtain all EHV substation connectors for a single station from one manufacturer. This not only provides design and manufacturing integrity through all the connectors, it also provides unit responsibility. This single source minimizes the amount of effort on the part of the customer and should any questions arise during construction or subsequent operation, experienced factory personnel are available to assist in resolving questions concerning our connectors.

Various standards, test and experience in the EHV field indicates there are minimum conductor sizes which should be considered in the design of 345 KV and 500 KV substations. Tubing smaller than 1 1/2" IPS or cable less than 1.76 inch diameter should be bundled for 345 KV application. Conductors smaller than 2 1/2" IPS or 2.50 inch cable diameter should be bundled for 500 KV application.

Based on extensive laboratory testing and many years of experience, we can recommend the most efficient connector and conductor system to meet your requirements.

Radio Influence Voltage (R.I.V.) and Corona Testing

Corona observations are made in a darkened laboratory using binoculars. A voltage is impressed upon test specimens to cause sufficiently violent corona discharge to identify areas of high electrical stress. Corona observations are made and recorded as the impressed voltage is decreased in small increments. Observers also monitor the absence or presence of audible corona.

All of our basic designs have been tested for satisfactory corona free performance and have consistently performed above the minimum acceptable limits currently specified by every utility and consultant with whom we have worked. Without exception, all material which we propose to furnish is capable of corona free performance within normal R.I.V. limits at specified voltages.

Conclusion

We have frequently been called upon to custom design for special applications at various voltages. Many customers have found that our catalog listing is only a small segment of the vast collection of connectors and fittings which we have produced for utilities across the country. We have the production capability for producing to customer specifications and the design knowledge and experience to make sound recommendations for connector application.

Our capabilities have been proven by the outstanding field performance record enjoyed to date and we are justifiably proud of this record. We sincerely appreciate your interest in our Extra High Voltage connectors and will welcome the opportunity to provide further information in any area in which questions may arise.

SUBSTATION CONNECTORS

SECTION ST

REFERENCE DATA

ANDERSON™ HUBBELL® POWER SYSTEMS FARGO® October 2016

REFERENCE DATA

ALUMINUM AND BRONZE CONNECTORS ST-1
RECOMMENDED TYPES OF HARDWARE AND INSTALLATION MOUNTING ST-4
AMPACITY RATINGS, BOLTED PAD CONNECTIONS ST-5
CATALOG NUMBER SUFFIXES FOR SPECIAL FEATURES ST-6
ANDERSON CATALOG NUMBER CODES ST-7
ANDERSON PAD DESIGNATIONS FOR NEMA STANDARD DRILLING ST-8
NEMA CONSTRUCTION STANDARDS ELECTRIC POWER CONNECTORS ST-9
WELDING PROCEDURES ALUMINUM BUSES AND CONNECTORS ST-11

ALUMINUM AND BRONZE CONNECTORS
ALLOYS, CONNECTORS, HARDWARE & INSTALLATION

In over 100 years of serving the electrical industry, Anderson and Fargo have earned a reputation for being creative leaders in the design and manufacture of electrical connectors, fittings and related accessories. The acceptance of these responsibilities is best exemplified through our wholly self-sufficient facilities. Design Engineering, Testing and Metallurgical Laboratories, and all facets of Manufacturing are geared for research, development and production of a full line of quality bronze, aluminum and ductile iron products.

The following information conveys helpful reference for material composition, installation, standardization and definitions applying to connectors and fittings as developed during our years of experience.

ALUMINUM CONNECTORS

Aluminum Alloys:

Connectors and fittings requiring high mechanical properties are cast from aluminum alloy 356. Sand cast 356 is heat treated to the T6 temper, and permanent mold castings are heat treated to the T61 temper. The 356 alloy is a 7 per cent silicon—0.3 per cent magnesium-aluminum alloy. The alloy is not susceptible to stress corrosion or season cracking. Its volume conductivity is approximately 39 per cent, I.A.C.S.

Cast compression connectors requiring a soft high conductivity aluminum are supplied from 99 plus per cent pure aluminum. Other aluminum compression connectors are made from commercially pure high conductivity wrought aluminum.

Installation Recommendations For Aluminum Connectors

Select type of connector from those listed below and follow the indicated procedure.

CONNECTOR TYPE	INSTALLATION PROCEDURE
Bolted	Procedure #1
Welded	Procedure #2
Compression	Procedure #3
Welded and Bolted	Procedure #2 followed by Procedure #1
Compression and Bolted	Procedure #3 followed by Procedure #1
Welded and Compression	Procedure #2 followed by Procedure #3

PROCEDURE #1—BOLTED CONNECTIONS

A. For aluminum to aluminum connections and aluminum to copper connections without a copper lined contact.
   1. Vigorously clean all contact surfaces of the connector and conductor with a stiff stainless steel wire brush to remove oxides. A typically bright aluminum surface should be obtained. Do Not Wire Brush Plated Contact Surfaces.
   2. Immediately coat these contact areas with a liberal amount of contact sealant.
   3. Install fitting with bolts finger tight. If a generous bead of compound does not appear, remove the conductor and add more sealant.
   4. Alternately (criss-cross) and evenly tighten bolts with a torque wrench to the values shown on page 6.
   5. Excess sealant squeezed out of joint can be left as is or can be lightly smoothed along contact line.
   6. All excess sealant must be removed from EHV Connectors and entirely from cable insulation.

B. For Aluminum connectors with a copper liner to copper connection.
   1. For maximum corrosion protection of the joint, the steps given in A-1 to A-5 should be followed.

PROCEDURE #2—WELDED CONNECTIONS

A. For cable connections:
   1. Remove all oil, grease and water in vicinity of surfaces to be welded. Vigorously clean the conductor and connector welding areas with a stainless steel brush.
   2. Slide the conductor into the weldment cavity until it is within 1/8" to 3/16" of the rear of the welding barrel.
   3. Prior to welding the connection, a test bead should be made upon an aluminum casting to test the weld settings. (See our catalog Section G - Substation Connectors for detailed welding procedure).
   4. Begin welding by "burning into" the inner wall of the casting and proceeding toward the conductor center. Wire brush the original weld if more than one weld pass is required.

B. For tubular connections:
   1. Remove all oil, grease and water in vicinity of surfaces to be welded. Vigorously clean the conductor and connector welding areas with a stainless steel brush.
   2. Align the tubular bus and connector groove. Begin welding by "burning into" the inner wall of the casting and proceeding toward the conductor center. Wire brush the original weld if more than one weld pass is required.
   3. Prior to welding the connection, a test bead should be made upon an aluminum casting to test the weld settings. (See pages 11-14 this section for detailed welding procedure).
   4. Due to the manufacturing tolerances on aluminum tubular bus, it is recommended that the tube be positioned in the weldment cavity and tack welded before starting final weld.

C. For welded connectors with a copper lined contact:

1. Firmly bolt the copper lined contact section of connector to the mating contact surface or to a suitable heat sink prior to welding. This prevents damage to the bonded liner.
2. Weld the aluminum connection in accordance with steps A or B above. If a heat sink is used, allow connector to cool before removing. The connector may be cooled by quenching in water.

PROCEDURE #3—COMPRESSION CONNECTIONS

1. Vigorously clean the conductor contact area with a stainless steel brush. Do not attempt to clean connector barrel. It is not necessary to apply sealant to the conductor. All connectors will have sealant applied at the factory.
2. Fully insert the conductor into the barrel and crimp. Crimping should begin nearest the center of sleeve type connectors. For closed barrel type connectors crimping should begin at the end and work toward the open end. Excess sealant squeezed out of the joint may be smoothed out around the mouth of the barrel. All excess sealant must be removed from EHV Connectors or any cable insulation.

Installation Recommendations for Aluminum to Copper Connections Using Aluminum Connectors

Connectors with contact sealant— Aluminum connectors can be used for making aluminum to copper connections if the proper installation care is observed. This includes the use of a sealant in accordance with practices outlined above. Use of a sealant protects the connection from oxide formation and electrolytic corrosion for as long as it remains present in the connection completely coating the surfaces and sealing out moisture.

Added protection in addition to sealants is available. Aluminum distribution connectors can be supplied with plating or with copper lined contacts.

Bi-Metallic Transition Plates—Aluminum to copper connections between flat NEMA drilled tongues and bars can be made using transition plates (Type TP). These plates are formed from sheets of 80% aluminum 20% copper which are molecularly bonded together. Best results are obtained by using contact sealant. Always position the aluminum conductor above the copper conductor.

Tin Plating—Tin plating can be furnished on certain connectors by adding suffix "GP" to the catalog number, aluminum distribution.

Hardware—Anodized Aluminum Clamping Bolts are standard with most Aluminum Power Connectors and may be supplied at extra cost with other connectors. The bolts are fabricated 2024-T4 aluminum and are anodized. After anodizing, the coating is sealed with a dichromate solution which imparts a yellow-green finish.

Standard nuts furnished on aluminum bolts are 6061 T6 dry waxed coated.

Insulator attachment hardware for bus supports is galvanized steel.

BRONZE AND COPPER CONNECTORS

Copper Casting Alloys

Our modern, all electric furnaces provide copper alloy castings of the highest quality possible. The alloy used will vary according to the requirement of the component.

Connectors requiring high tensile strength and corrosion resistance in application are cast from Anderson Alloy 112 (ASTM B-30 Alloy No. C95500). The 112 alloy is a 10% aluminum, 4.5% nickel copper alloy with a minimum tensile strength of 90,000 PSI.

Connectors requiring current-carrying abilities and reasonable strength are cast from Anderson Alloy 123 (ASTM B-30 Alloy No. C84400). The 123 metal is a 81% copper—3% tin—7% lead—9% zinc alloy.

For heavy duty copper compression connectors CDA 110 copper is used. This 110 alloy is 99.9% pure copper.

Other copper compression connectors are made from commercially pure high conductivity wrought copper.

Conductivity is purposely omitted in the above descriptions because it is often confused with current-carrying capacity. While connector alloys may vary in conductivity, design parameters are applied in each case to assure adequate capacity. While connector alloys may vary in conductivity, design parameters are applied in each case to assure adequate capacity to meet the particular application.

Installation Recommendations for Bronze and Copper Connectors

Bronze Bolted Connectors—Contact sealants are not normally required in copper connections. However, the use of sealant is recommended in severe corrosive environments and direct burial applications such as ground grids.

Vigorously clean the conductor and connector contact surfaces with a stainless steel wire brush.

Alternately and evenly tighten bolts with a torque wrench to the values shown in Recommended Torque Values table.

Hardware—Silicon bronze hardware is normally supplied for all conductor clamping bronze components. Stainless steel hardware may be substitued where and when necessary.

Copper Compression Connections—Vigorously clean the conductor contact surfaces with a stainless steel wire brush. Do not attempt to clean connector barrel. In general it is not necessary to apply sealant to the conductor or connectors. Copper connectors requiring sealant have the sealant applied at the factory. The use of sealant is recommended in severe corrosive environments and direct burial applications such as ground grids. Sealants may be designated for a copper connector by adding the appropriate suffix to the basic catalog number.

Installation Recommendations for Copper to Aluminum Connectors Using Copper Connectors

When making copper to aluminum connections, using bronze or copper connectors, best results will be obtained by using the following methods.

1. Tin plate the copper base connection and use sealant between the aluminum and copper. (Tin plating may be specified by adding suffix "-TP" to bronze and copper connectors).
2. Copper pad connectors may be attached directly to an aluminum pad if sealant is freely used.
3. The use of an aluminum conductor in a standard copper base connector (plated or unplated), is not recommended.
4. An aluminum to copper cable transition may be made directly using an aluminum connector as covered in the preceding section on Aluminum Connectors.

Note With Any Transition Method:
Do Not Position The Aluminum Member In Such A Way That Would Allow Water To Drain From The Copper Connector Over (Or Into) The Aluminum Connection Point.

General Information on Bronze or Copper Connectors

In regard to bolted connectors; components to be in contact with cable and tube are supplied with "as cast" surfaces. Conductor grooves for cables are designed with ample radii to prevent conductor damage.

Connector Design—In all of our bronze and aluminum power connectors, the temperature rise of the connector shall not exceed the temperature rise of the conductor with which it is intended to be used. The temperature rise of an electric power connector which connects conductors of varying sizes shall not exceed the temperature rise of the conductor having the highest temperature rise. All temperatures are based on the conductor being rated at 30 degrees rise over a 40 degrees ambient, indoors, in still but unconfined air. Our bronze and aluminum connectors conform to one of the following as applicable:

NEMA Standard Publications No. CC-1-1993
CC-3-1973 (ANSI C119.4-1976)
U.L. 486

Contact Sealants—Various sealant formulations have been developed to provide improved electrical and mechanical performance as well as environmental protection to the contact area. Non-petroleum base sealants are provided for underground applications and other applications where natural or synthetic rubber goods might be adversely affected.

The use of sealants are recommended for aluminum to aluminum or aluminum to copper connections which are subjected to severe corrosive environments and when used in direct burial applications such as ground grids.

Non-gritted sealants are recommended for flat connections and as a groove sealant in bolted connectors.

Our gritted sealants are primarily used in compression connectors. Aluminum compression connectors have sealant applied at the factory.

Aluminum stud connectors are supplied with factory applied sealant in the threaded portion. To obtain factory applied sealant in other connectors add the desired sealant suffix designation to the basic catalog number. Example: ACF6CXB

"XB" for petroleum based sealant

RECOMMENDED TYPES OF HARDWARE AND INSTALLATION MOUNTING

HARDWARE FOR JOINING LIKE OR UNLIKE METALS

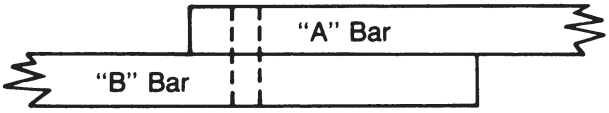

If "A" BAR is	Cu	AL	AL	Galvanized Steel	Galvanized Steel
and "B" BAR is	Cu	Cu	AL	Cu	AL
Recommended Series of Hardware	(1) Si-Br (2) SS (3) GS	(1) SS *or* GS	(1) AL (2) SS *or* GS	(1) Si-Br (2) SS *or* GS	(1) AL (2) SS *or* GS

KEY:
Si-Br—Silicon Bronze GS—Galvanized Steel
SS—Stainless Steel AL—Aluminum
(1) denotes preferred hardware usage.

NOTE:
Contact sealant should be used between Aluminum to Aluminum and Aluminum to Copper connections.

ALUMINUM CONNECTORS

Aluminum Connector (Clamping Hardware)

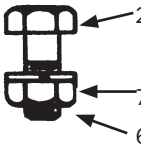

Aluminum To Aluminum Assemblies (Tongue Mounting Hardware As Assembled At Factory)

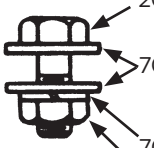

Aluminum To Copper Assemblies (Tongue Mounting Hardware)

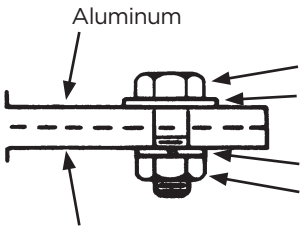

BRONZE CONNECTORS

Bronze Connector (Clamping Hardware)

Bronze To Copper Assemblies (Tongue Mounting Hardware)

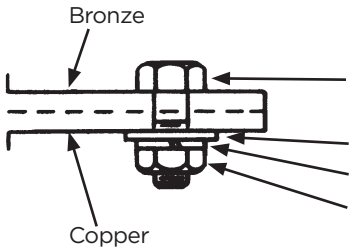

RECOMMENDED TORQUE VALUES FOR BOLTED CONNECTORS

Tightening Force Applied to Hardware: Following are ANDERSON'S recommended torque values applying to all clamping hardware used in connectors and fittings.

NOTE:
Care should be taken to prevent sealant from being applied to hardware since torque values will be affected if the hardware becomes lubricated with sealant.

BOLT DIA.	RECOMMENDED TORQUE NON-LUBRICATED STEEL & SILICON BRONZE HDWE. LB. INCHES	RECOMMENDED TORQUE LUBRICATED HDWE. & ALUMINUM HDWE. LB. INCHES*
5/16"	180	120
3/8"	240	168
1/2"	480	300
5/8"	660	480
3/4"	840	720

**Reduced torque limits apply when replacing aluminum clamping hardware with steel in bolted aluminum connectors.*

NOTE: All eyestems have a recommended torque of 200 lb.—inches.

Ampacity Ratings of Anderson & FARGO Heavy Duty [1] Bolted Pad Connectors Compression, Welded and Close-Fit Bolted Designs

BOLTED PAD			BOLTS [2]		AMPACITY (A) [4]	
	DIMENSIONS (IN)				INHIBITOR TYPE	
STYLE	WIDTH	LENGTH	NUMBER	SIZE (IN)	STANDARD	HTJC [3]
B	1.5	3.0	2	0.5	1220	1400
B2	2.0	3.0	2	0.5	1260	1450
C	3.0	3.0	4	0.5	2450	2825
D	4.0	4.0	4	0.5	2580	3000
N	6.0	4.0	6	0.5	3825	4400

NOTES:
(1) Heavy duty connectors are defined as having continuous cross section about the periphery of the conductor and through the pad, equal to or greater than 125% of the conductor.
(2) Ratings assume use of steel clamping bolts and Belleville spring washers. Higher ampacity ratings can be achieved if conductive bolts, nuts and washers are used.
(3) HTJC is the Anderson/FARGO conductive grit joint compound, recommended for maximum conductivity in compression and bolted pad joints.
(4) Ratings are based on conductor temperature of 90°C in 40°C ambient, 2 ft/sec. cross wind.

Suggested method of mounting connectors

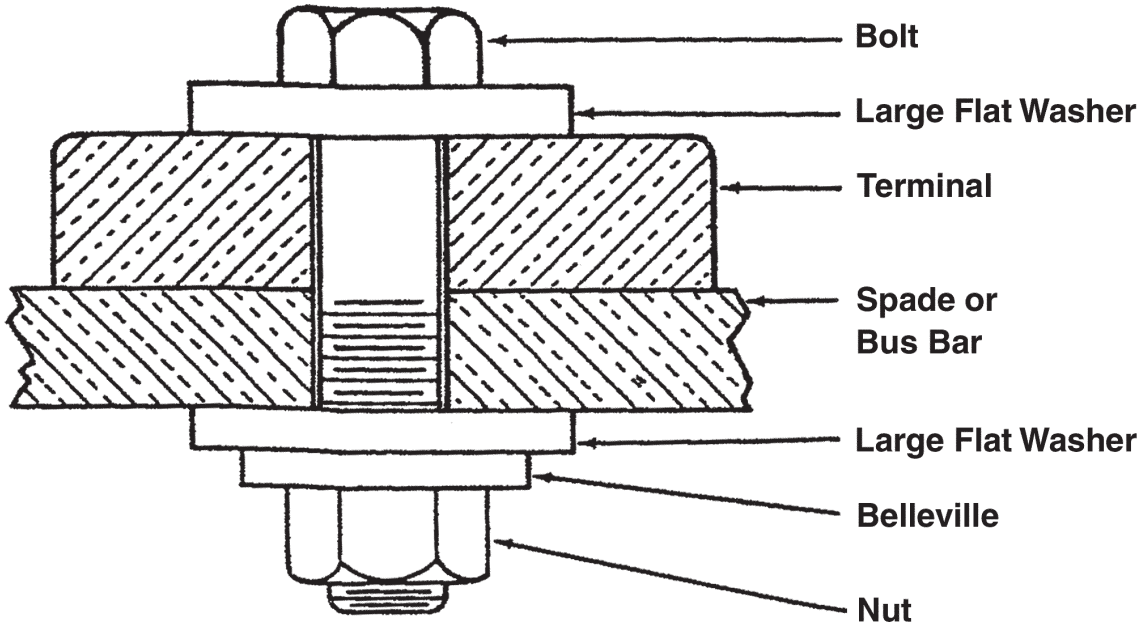

LETTER SUFFIX DESIGNATIONS TO STANDARD CATALOG NUMBER FOR SPECIAL FEATURES

A suffix added to a catalog number denotes that a change or modification is to be made to the standard catalog item. The suffixes listed below are for the convenience of our customers. The list does not include special modifications made for one customer only but those having general application.

CATALOG NO. SUFFIX	DESCRIPTION OF CHANGE OR MODIFICATION
A	Aluminum loop will be supplied instead of copper loop.
AH	Advance handle only—VCF and VCF6 hot stick assemblies.
AS	Aluminum hardware will be supplied instead of the usual (or standard) hardware.
BNK	Bolt, nut and cotter key will be supplied instead of usual clevis pin.
BNN	Bolt, nut and jam nut will be supplied instead of usual clevis pin.
BW	Belleville washers will be supplied instead of usual washers.
C	A clevis fitting will be supplied with strain, suspension and dead end clamps.
CF	Center-formed tongue will be supplied on lugs where side formed tongues are standard on bronze and aluminum items.
CRF	Corona free strain clamp.
E	An eyestem will be supplied instead of the usual hex head bolt. (This applies generally to stirrup and cable clamps).
ED	Everdur (silicon bronze) hardware will be supplied instead of the usual hardware.
FW	A flatwasher will be supplied instead of a lock-washer.
G	A guide will be supplied on expansion connectors.
GA	Galvanized hardware will be supplied instead of usual hardware.
GP	Tin plating will be supplied on aluminum items.
HP	Hexagon clevis pin furnished instead of standard clevis pin.

CATALOG NO. SUFFIX	DESCRIPTION OF CHANGE OR MODIFICATION
HW	Hexagon head bolt with a flat washer under the head will be supplied instead of the usual bolts.
LW	A lockwasher will be supplied instead of a flat-washer.
N	Neither socket nor clevis fittings will be supplied with suspension, or dead end clamps.
NSB	No spacer bar on straight line dead end clamps.
S	A socket will be supplied with suspension and dead end clamps.
SE	A static eliminator spring will be supplied on bus supports.
SF	Side formed tongue will be supplied when a center formed tongue is standard.
SP	The catalog number specified is to be modified for particular requirements which the item will not otherwise fill. (Special)
TB	Electro-tin plate loop (bail) .0002”-.0004”.
TP	Tin plating will be supplied on bronze items, (Electro-tin .0002”-.0004” thick).
U	U-bolts may be supplied on these items.
UD	An undrilled tongue will be supplied on terminals or lugs.
XB	The connector will be supplied with the grooves coated with a petroleum base sealant and enclosed in a polyethylene bag.
XY	Contact surface finished on both sides of tongue.

When more than one suffix is required to designate more than one special feature, they should be arranged in alphabetical order except when the suffix is published as part of the catalog number.

KEY SYMBOLS TO ANDERSON ELECTRICAL CONNECTORS CATALOG NUMBERS

Aluminum Connectors for Cable*

CONDUCTOR RANGE			
CATALOG NUMBER CODE	ALUMINUM COPPER AWG-MCM	ACSR AWG-MCM	DECIMAL RANGE INCHES
6**	#4—1/0— 250—400	#4—1/0—4/0	.232—.398
7	350—600	4/0—336.4	.368—.575
9	600—900	336.4—477	.563—.744
11	900—1250	556.5—795.5	.681—.893
13	1250—1600	715.5—1113	.870—1.108
15	1500-2000	1113—1272	1.081—1.293
16	2000—2500	1272—1590	1.289—1.459
18	2500—3000		1.382—1.632
21	—	*Decimal Range	1.632—1.824
22			1.824—2.000
			2.000—2.200

Bronze Connectors for Cable

VERSA-GROOVE CAP NUMBER	CABLE RANGE				DECIMAL RANGE INCHES
	SMALL GROOVE		LARGE GROOVE		
	MIN.	MAX.	MIN.	MAX.	
022	#6	#2	#2	2/0	.162—.419
025	#4	1/0	2/0	250 MCM	.204—.575
050	1/0 Sol.	4/0 Str.	250	500 MCM	.325—.813
080	2/0 Sol.	500 MCM	500	800 MCM	.365—1.031
100	4/0 Str.	750 MCM	750	1000 MCM	.522—1.152
150	250	750 MCM	750	1500 MCM	.474—1.412
200	500	1500 MCM	1500	2000 MCM	.811—1.632

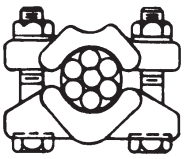

Large Groove

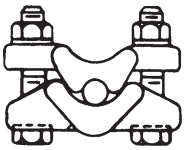

Small Groove

BRONZE REVERSIBLE CABLE CAPS

Unless otherwise indicated all bronze cable connectors have cable sections designed to accommodate a range of conductors. Their wide application flexibility offers the distinct advantages of reducing stock inventory, and possibility of errors of misapplication. There is no sacrifice of either electrical or mechanical efficiency when using reversible cable caps. This design is field proven by years of trouble free service in locations where severe operating conditions exist.

Our four bolt reversible cable cap design is adequate for high current capacity conductors, yet priced in line with standard duty connectors.

Copper or Aluminum Flat Bar

CODE NO.	WIDTH IN INCHES*
10	1
14	1 1/2
20	2
24	2 1/2
30	3
34	3 1/2
40	4
50	5
60	6
80	8
100	10
120	12

**Bar thickness & spacing (if same) are added at end of completed catalog number as "14," "12," etc.*

Copper or Aluminum Flat Bar

CODE NO.	IPS DIAMETER
02	1/4
03	3/8
04	1/2
06	3/4
10	1
12	1 1/4
14	1 1/2
20	2
24	2 1/2
30	3
34	3 1/2
40	4
44	4 1/2
50	5
60	6

Copper or Aluminum Threaded Studs

CODE NO.	DIAMETER IN INCHES*
01	1/8
02	1/4
03	3/8
04	1/2
05	5/8
06	3/4
07	7/8
10	1
11	11/8
12	1 1/4
13	1 3/8
14	1 1/2
15	1 5/8
16	1 3/4
17	1 7/8
20	2
21	2 1/8
22	2 1/4
23	2 3/8
24	2 1/2
26	2 3/4
30	3
32	3 1/4
34	3 1/2
36	3 3/4
40	4
50	5
60	6

**Threads per inch are added at the end of completed catalog number as"12," "16," etc. Smooth studs are specified by adding "0."*

ANDERSON PAD DESIGNATIONS FOR NEMA STANDARD DRILLING

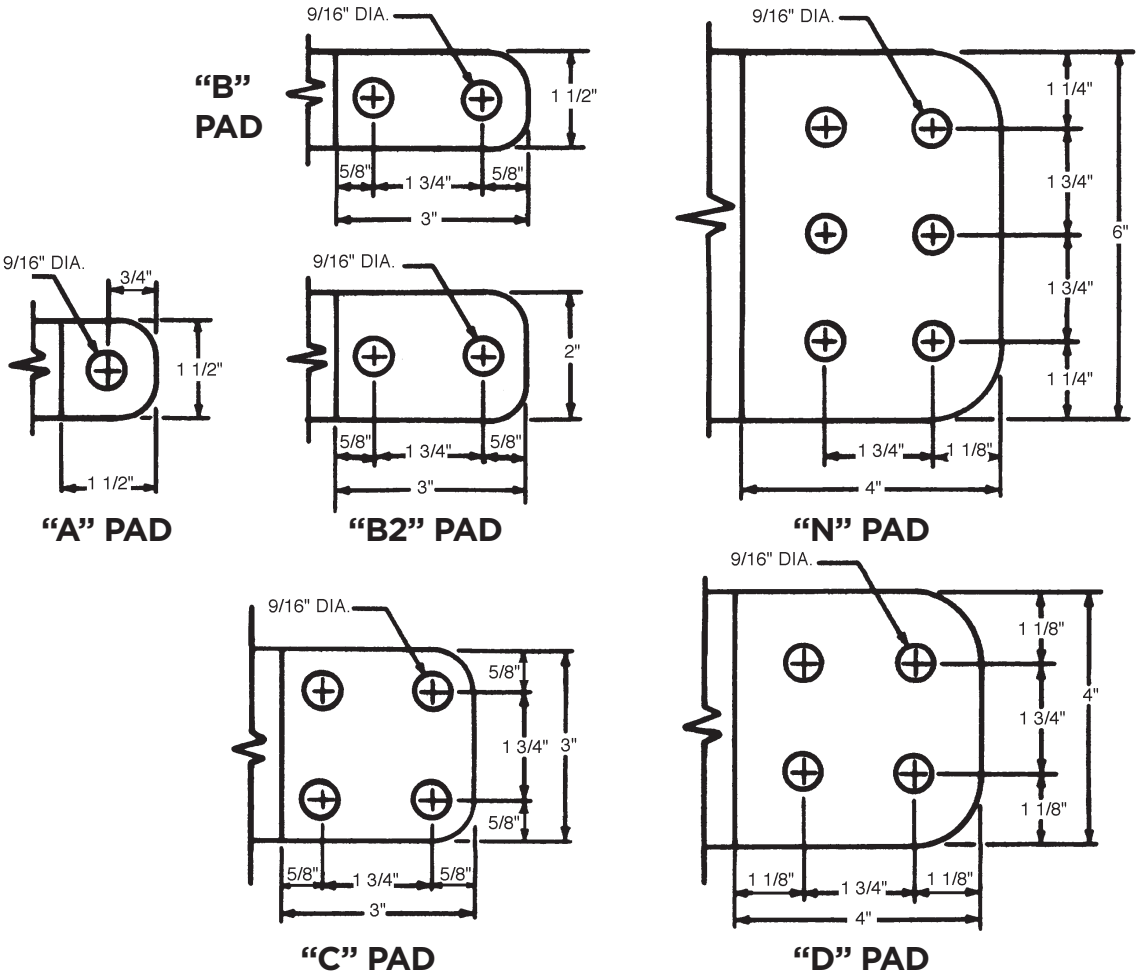

ST 8

NEMA CONSTRUCTION STANDARDS ELECTRIC POWER CONNECTORS

CC 1-4.06 Number and Diameter of Bolts for Connectors

Type of Conductor				For Copper Conductors						For Aluminum or ACSR Conductors			
Standard Pipe Size, Inches	Copper Cable, kcmil	Aluminum or ACSR Cable Outside Diameter, Inches	Stud Diameter, Inches	Single Size Standard Duty Bolts Per Conductor		Single Size Heavy Duty Bolts Per Conductor		Range Taking Bolts Per Conductor		Range Taking* Bolts Per Conductor		Single Size Bolts Per Conductor	
				Number	Dia. Inches	Number	Dia. Inches	Number	Dia. Inches	Number	Dia. Inches	Number	Dia. Inches
3/8	#4 thru 2/0	0.200 thru 0.399	1/2	2	3/8	3	3/8	4	3/8	2	1/2	2	1/2
1/2	3/0 thru 500	. . .	5/8 thru 1-1/8	3	3/8	3	3/8	4	3/8	4	1/2	4	1/2
3/4 thru 1	550 thru 800	. . .	. . .	3	3/8	4	3/8	4	3/8	4	1/2	4	1/2
1-1/4 thru 2	900 thru 2000	0.400 thru 1.412	1-1/4 thru 2-1/2	3	1/2	4	1/2	4	1/2	4	1/2	4	1/2
2-1/2	900 thru 2000	0.400 thru 1.412	. . .	3	1/2	4	1/2	4	1/2	4	1/2	4	1/2
3 thru 4	2250 thru 3000	1.413 thru 1.850	2-3/4 thru 5	3	5/8	4	5/8	4	5/8	4	5/8	4	5/8
4-1/2 thru 6	. . .	. . .	. . .	. . .	. . .	. . .	. . .	. . .	. . .	. . .	. . .	6	5/8

** Applies to cable only.*
NOTE I — Each U bolt is counted as two bolts.
NOTE II — For shackle design (single casting wrap-around conductor), each bolt counts as two bolts.
NOTE III — When two different sizes of conductors are involved, the bolts specified for the smallest conductor may be used.
NOTE IV — When three bolts are specified, the following exceptions apply:
a. Terminal lugs shall have a minimum of four bolts or the equivalent for a single conductor.
b. Stud connectors shall have minimum of four bolts or the equivalent for the stud portion.
NOTE V — Bronze alloy bolts shall have a minimum tensile strength of 70,000 pounds per square inch and aluminum alloy bolts shall have a minimum tensile strength of 55,000 pounds per square inch.
NOTE VI — Nominal torque values shall be:

Diameter Of Bolts, Inches	Nominal Torque Values	
	Foot/Pound	Inch/Pound
3/8	20	240
1/2	40	480
5/8	55	660
3/8L	15	180
1/2L	25	300
5/8L	40	480

L—Lubricated

EXAMPLES ILLUSTRATING THE USE OF THE TABLE IN CC 1-4.06

EXAMPLE NO. 1—A straight coupler connector or a 90-degree elbow connector is used to connect a conductor of 1-1/2 inch pipe to another conductor of 1-1/2-inch pipe. After locating the proper line for the 1-1/2-inch pipe in the first column of the table, the total number of bolts required can be determined from the information given for the connectors, as follows:

For standard-duty connectors—

Three 1/2-inch-diameter bolts per conductor	x	2 (number of conductors)	=	a total of six 1/2-inch-diameter bolts per fitting

For heavy-duty connectors—

Four 1/2-inch-diameter bolts per conductor	x	2 (number of conductors)	=	a total of eight1/2-inch-diameter bolts per fitting

EXAMPLE NO. 2—A single-size "T" connector is used to connect a 3-inch Schedule 40 aluminum main to a 397.5 kcmil ACSR tap (outside diameter = 0.743 inch).

After locating the proper line for the 3-inch pipe in the first column of the table, it will be seen that the connectors require four 5/8-inch-diameter bolts per conductor.

After locating the proper line for the 0.743-inch-outside diameter ACSR tap in the third column of the table, it will be seen that the connectors require four 1/2-inch-diameter bolts per conductor.

In this case and in accordance with Note III following the table, the manufacturer has the choice of using either four 1/2-inch diameter bolts per conductor of four 5/8-inch-diameter bolts per conductor.

EXAMPLE NO.3—A copper stud connector having a 1-1/8"-12 thread is connected to copper cable ranging from 400 to 800 kcmil in size. Using the fourth column for the stud and the second column for the copper cable, it will be seen that the connectors require the following bolts:

1. Four 3/8-inch-diameter bolts per conductor for the stud.
2. Four 1/2-inch-diameter bolts per conductor for the cable.

In this case and in accordance with Note III following the table, the manufacturer has the choice of using either four 3/8-inch diameter bolts per conductor or four 1/2-inch-diameter bolts per conductor.

WELDING ALUMINUM BUSES AND CONNECTORS

Recommended welding procedures to ensure a sound weld are as follows:

Pure aluminum melts at 1220° F while aluminum alloys melt in the range of 1020° F depending on the alloy content of the particular metal involved. When aluminum alloys are heated there is no color change. This makes it difficult, if not impossible, to tell if the metal is near the welding temperature.

The ever present surface oxide films on aluminum have a melting point of 3600° F. The parent aluminum or aluminum alloy can therefore be melted without fusing the surface oxides. Unless the film is removed, cleanliness of the molten filler metal and the parent metal cannot be complete and both strength and conductivity may be sacrificed. Therefore, it is of prime importance that the aluminum oxides be removed from the aluminum alloys before welding is started. In the shielded arc welding method the shielding gas has a tendency to clean the material as welding progresses.

CLEANING OF BUSES AND FITTINGS

It is very important to remove all greases and oxides from the surfaces to be welded. This can be accomplished by using a mild alkaline solution or standard degreasing solution. The preferred method is to use a stainless steel wire brush and vigorously scrub the surfaces to be welded. The stainless steel brushes are specified because the stainless steel has less of a tendency to pick up particles of aluminum and aluminum oxides.

WELDING METHODS

Anderson recommends the following two types of welding methods for welding aluminum fittings and buses:

1. TUNGSTEN-ARC WELDING (TIG). The inert gas shielded tungsten-arc process is widely used for welding aluminum bus fittings. In this process the arc is established between a non-consumable tungsten electrode and the section to be welded. Inert gas envelops the arc to prevent oxidation during welding. Hence, no flux is required. A bare filler rod supplies filler metal to the weld area. To initiate the arc the tungsten electrode is placed in contact with the component and then withdrawn to establish an arc length of approximately 3/16". The arc is given a circular motion until the base metal liquifies and the weld puddle is established. Filler metal is added by hand as required. In this process, if more than one pass is required for a sufficient weld, the weld should be wire brushed between passes to remove any surface dirt or oxides which have accumulated from the previous pass. Since no flux is used the finished weld does not require cleaning. In this process the heat of the tungsten arc is concentrated in a smaller area and is much faster than the conventional type of welding and distortion of the weld is negligible since the heat is concentrated in a small area. In this process, if thicknesses greater than 1/2" are to be welded, preheating of the parts before welding will increase the welding speed.

2. METALLIC-ARC INERT-GAS SHIELDED WELDING. The consumable electrode inert-gas shielded metal arc (MIG) welding process combines the advantages of tungsten-arc welding with increased welding speed. Welding can be done from any position and the process can be either manual or automatic. Manual welding techniques are somewhat different from other methods. However, a welder can be trained to use the MIG process with only a few days concentrated training. In the MIG process the bare filler rod is supplied as a coil of bare wire. In the commercially available equipment this wire is added to the weld at a predetermined rate by a motor-driven feed that can be adjusted to the magnitude of the welding current. In this process, as well as the tungsten-arc process, gas forms a shield around the arch to prevent oxidation during welding. Either helium, argon or a mixture of helium and argon are suitable shielding gases. Pure argon is most widely used on sections less than 3/4" thick. On sections over 3/4" thick the gases are usually mixed to combine the hotter arc characteristics of helium with the stabilizing effect of argon. If exceptionally hot arc characteristics are required, pure helium can be substituted for the gas mixture. Precaution should be exercised if this substitution is made in that it is very easy to burn through the items that are to be welded with a pure helium atmosphere.

The reasons that Anderson has selected the metallic-arc inert-gas shielded welding method is that in this process the filler metal can be automatically fed through the welding mechanism and eliminates holding the electrode holder in one hand and the filler metal in the other as in the tungsten arc method. Figure 1 of the attached drawing shows the basic components for a metallic-arc inert-gas shielding process (MIG) and Figure 2 shows the basic components for the tungsten-arc process (TIG). As it is readily apparent, the basic difference between the two types of welding apparatus is the automatic feeding mechanism for the filler wire.

In both types of apparatuses the electrode holder and the welding gun can or cannot be cooled by water. If welding currents of more than 125 amps are required, both methods will have to have water cooling aparatuses to the electrode holder and the welding gun.

WELDERS' QUALIFICATIONS

No welding should be done until the operator has had experience with welding aluminum alloys by the methods described above. Men with previous experience in metal welding should be selected for training in welding aluminum for a period of training of not less than one week after which time the man can be considered proficient in the use of the equipment and in the welding of aluminum joints. After this period, there should be no difficulty experienced in welding aluminum alloys. It is suggested, if practical, that welders should practice on actual fittings or buses before proceeding with the welding of the required job.

The following is Anderson's recommended specification for current fittings, wire feeds, gas flows, etc. These specifications are of a general nature to the extent that many factors have to be considered such as:

1. Type of equipment used, whether water cooled or not, etc.
2. The size and mass of the piece to be welded.
3. The position of the weld.
4. And most important of all, the operator's skill.
5. All persons in the welding area should wear the proper shields. The arc is approximately twice as strong as the standard AC welding arc. Extreme caution should be exercised for the protection of eyes.

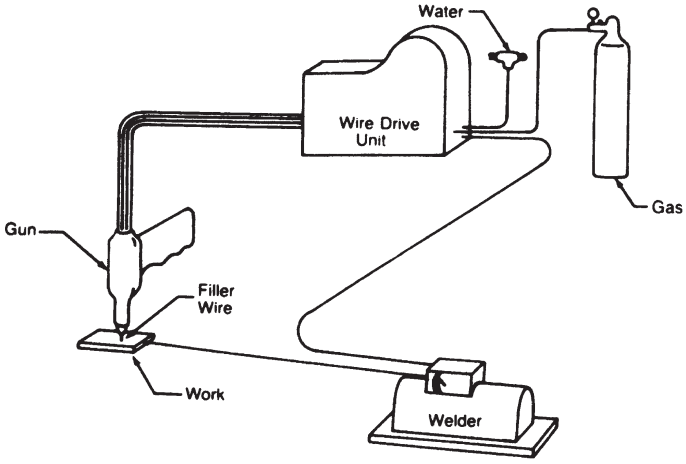

Fig. 1 Metallic-arch inert-gas shielded welding (MIG)

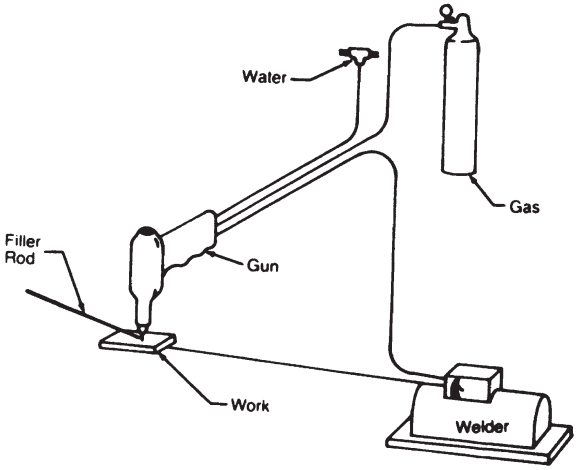

Fig. 2 Inert-gas shielded tungsten-arch welding (TIG)

GENERAL WELDING SPECIFICATIONS FOR CONSUMABLE ELECTRODE WELDING METHOD

SCOPE: This specification applies primarily to welded aluminum connectors for substation construction.

MATERIAL:

CASTINGS—As furnished by Anderson are molded from 356 aluminum alloy and heat treated to T6 condition, or #99 pure aluminum depending on the application.

FILLER ROD—043 aluminum alloy 1/16" diameter for all joints as shown in the Anderson catalog.

SHIELDING GAS—Argon.

WELDING APPARATUS—Tungsten-arc (TIG) or metallic-arc inert-gas shielding (MIG). A 400 amp welding machine with reverse polarity is capable of handling the majority of aluminum welding jobs.

PROCEDURES:

It is of the utmost importance to remove oil, grease, water and oxide from the surfaces to be welded. All surfaces to be welded should be wire brushed with a stainless steel brush prior to welding. If more than one weld pass is required, the original weld should be wire brushed before applying additional weld.

Pre-heating of surfaces to 400° E is optional, but by preheating the surfaces before welding it is possible for the operator to weld easily and faster.

Metallic-Arc Inert-Gas Consumable Electrode

IPS SIZE	WALL THICKNESS	AMPERES	4043 FILLER ROD SIZE	APPROX. ARGON FLOW CFH	PREHEAT °F	WIRE SPEED INCHES PER MIN.	NO. PASSES
1/2	.108	125-150	1/16	20	None	170	1
3/4	.113	125-150	1/16	20	None	180	1
1	.133	125-150	1/16	30	None	180	1
1-1/4	.140	160-170	1/16	30	None	180	1
1-1/2	.144	160-170	1/16	30	None	180	1
2	.154	170-190	1/16	30	None	180	1
2-1/2	.203	170-190	1/16	40	None	180	1
3	.216	170-190	1/16	40	Optional to 400° F	180	1
3-1/2	.226	170-190	1/16	40	Optional to 400° F	200	1
4	.237	180-200	1/16	50	Optional to 400° F	200	1
4-1/2	.247	180-200	1/16	50	Optional to 400° F	200	1
5	.258	180-200	1/16	50	Optional to 400° F	200	1 or 2
6	.280	180-200	1/16	50	Optional to 400° F	200	1 or 2

Flat Bar

FLAT BAR THICKNESS	AMPERES	4043 FILLER ROD SIZE	APPROX. ARGON FLOW CFH	PREHEAT °F	WIRE SPEED INCHES PER MIN.
1/8	125-150	1/16	30	None	180
1/4	180-200	1/16	50	Optional to 400° F	180
3/8	300	1/16	50	Optional to 400° F	200
1/2	340	1/16	60	400° F	200
3/4	375	1/16	60	400° F	200

Tungsten - Arc

IPS SIZE	WALL THICK-NESS	AMPERES	GAS CUP DIA. INCHES	TUNGSTEN DIA. INCHES	ARGON FLOW CFH	PREHEAT °F	NO. PASSES	4043 FILLER ROD SIZE
1/2	.108	125-150	3/8	1/8	20	None	1	1/8
3/4	.113	125-150	3/8	1/8	20	None	1	1/8
1	.133	125-150	3/8	1/8	30	None	1	1/8
1-1/4	.140	160-170	3/8	1/8	30	None	1	1/8
1-1/2	.144	160-170	3/8	1/8	30	None	1	1/8
2	.154	170-190	1/8	1/8	30	None	1	3/16
2-1/2	.203	170-190	1/2	3/16	40	None	1	3/16
3	.216	170-190	1/2	3/16	40	Optional to 400° F	1	3/16
3-1/2	.226	170-190	1/2	3/16	40	Optional to 400° F	1	3/16
4	.237	180-200	1/2	3/16	50	Optional to 400° F	1	3/16
4-1/2	.247	180-200	1/2	3/16	50	Optional to 400° F	1	3/16
5	.258	180-200	1/2	3/16	50	Optional to 400° F	1 or 2	3/16
6	.280	180-200	1/2	3/16	50	Optional to 400° F	1 or 2	3/16

Flat Bar

FLAT BAR THICKNESS	AMPERES	GAS CUP DIA. INCHES	TUNGSTEN DIA.	ARGON FLOW CFH	PREHEAT °F	NO. PASSES	4043 FILLER ROD SIZE
1/8	125	3/8	1/8	30	None	1	1/8
1/4	150	1/2	3/16	30	None	1	3/16
3/8	300	1/2	3/16	50	Optional to 400° F	1	1/4
1/2	400	5/8	1/4	50	400° F	1 or 2	1/4
3/4	450	5/8	1/4	50	400° F	2	5/16
1	500	5/8	5/16	50	400° F	2	5/16

About Hubbell Power Systems

Hubbell Power Systems (HPS) manufactures a wide variety of transmission, distribution, substation, OEM and telecommunications products used by utilities. HPS products are also used in the civil construction, transportation, gas and water industries. Our product line includes construction and switching products, tools, insulators, arresters, pole line hardware, cable accessories, test equipment, transformer bushings and polymer precast enclosures and equipment pads.

Because Hubbell has a policy of continuous product improvement. We reserve the right to change design and specifications without notice.

©Copyright 2016 Hubbell Incorporated
Printed in U.S.A. 06/14 QG 2.5M

CA_05_044_E