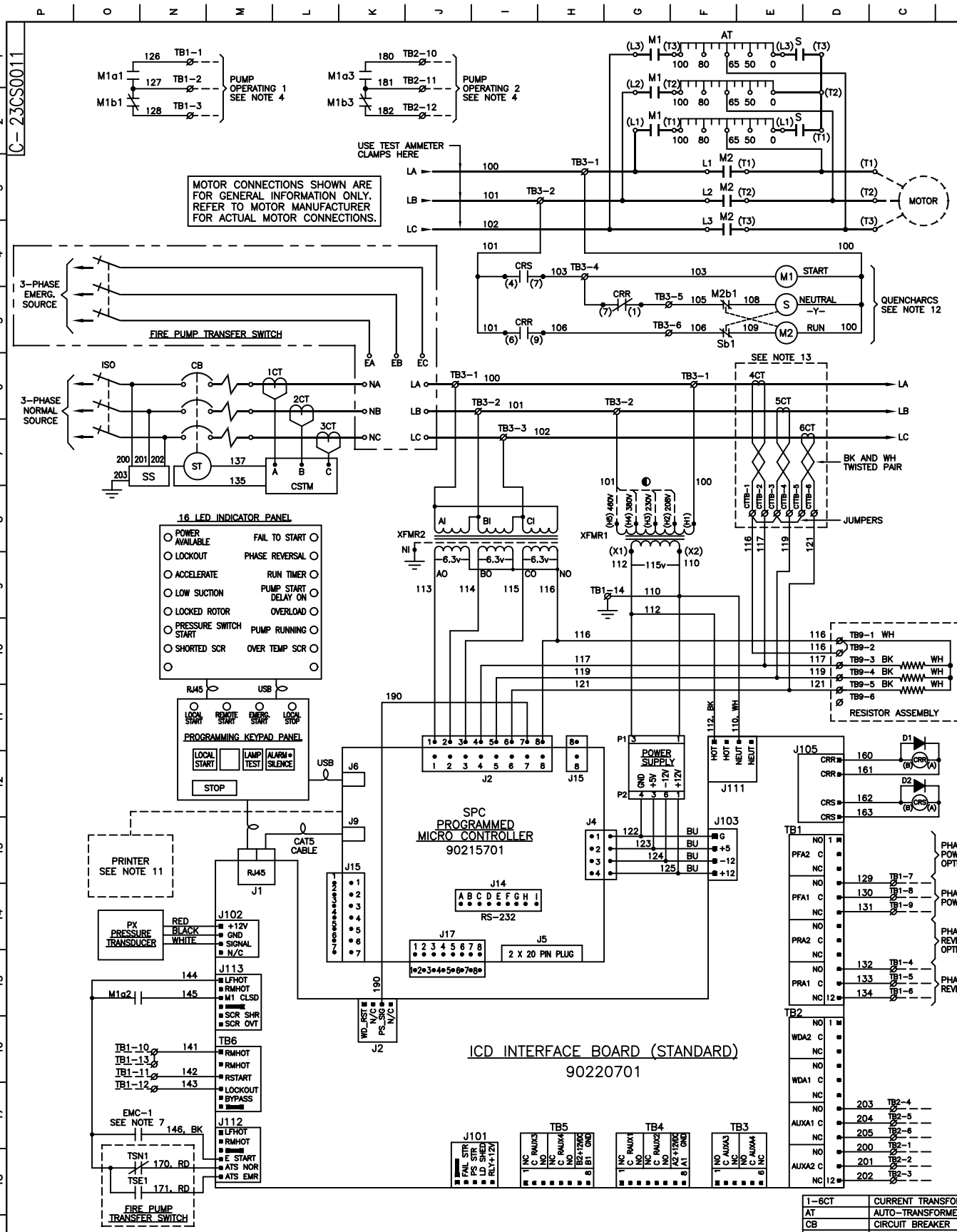

STANDARD LXi-2300 SCHEMATIC DIAGRAM
AUTO - TRANSFORMER
FULL SERVICE FPC/ATS COMBO

M/L NO.	
MOTION:	
REF.	
CADD NO.	23CS0011
DATE	10/14/02
DR.	DAMA
CK.	
APPR.	
DRG. NO.	1 OF 1 C-23CS0011

Hubbell Industrial Controls, Inc.
4301 Cheyenne Drive, Archdale, N.C. 27263

Rev.	DATE	SYS	BY	DESCRIPTION
F	11/10/05		DAMA	UPDATED DRAWING PER ECR # A05-00035.

NOTES:

1. SCHEMATIC SHOWN IN A "NO POWER" STATE, NORMAL WATER PRESSURE APPLIED.
2. CUSTOMER CONNECTIONS ARE SHOWN BY MEANS OF DASHED LINES.
3. RELAY OUTPUT CONTACTS ARE RATED 10 AMPS AT 120 VAC.
4. Ma CONTACTS CLOSE WHEN M IS CLOSED. Mb CONTACTS CLOSE WHEN M IS OPEN.
5. MINIMUM OF 12" CLEARANCE MUST BE MAINTAINED BETWEEN PUMP ROOM FLOOR AND CURRENT CARRYING OR LIVE PARTS.
6. IF PHASE REVERSAL FAULT OCCURS WHEN PUMP ROTATION IS CORRECT, REVERSE WIRE NOS. 113 AND 114 ON THE J2 CONNECTOR LOCATED AT THE TOP OF SPC (FRONT) PC BOARD.
7. EMC-1 IS NORMALLY CLOSE, HELD OPEN WHEN OFF.
8. CONTROLLER SUITABLE FOR USE AS SERVICE EQUIPMENT.
9. FOR ATS SCHEMATIC SEE DWG. NO. 45CS0011.

*10. NOT USED UNLESS AUDIBLE ALARM IS SUPPLIED.

11. SHOWN FOR REFERENCE ONLY. USED WHEN SUPPLIED.
12. ARC QUENCHERS ARE CONNECTED ACROSS COILS M1, M2, AND S.
13. CT ASSEMBLY MOUNTED ON FIRE PUMP TRANSFER SWITCH.

◐ – CONNECT PRIMARY TAP PER LINE VOLTAGE

REFERENCE DRAWINGS:

FOR AUTOMATIC TRANSFER SWITCH SCHEMATIC DIAGRAM, SEE DWG. 45CS0011.

FOR FIRE PUMP CONTROLLER FIELD CONNECTIONS, SEE DWG. 23CF0011.

SYMBOL	DESCRIPTION
1-6CT	CURRENT TRANSFORMER
AT	AUTO-TRANSFORMER
CB	CIRCUIT BREAKER
CRR	MOTOR CONTACTOR RELAY
CRS	PUMP START RELAY
D1,D2	FLY-BACK DIODE
EMC-1	EMERGENCY MANUAL CONTACT
ISO	ISOLATING DISCONNECT NORMAL
M1,M2,S	CONTACTORS
M2a,S1b	AUXILIARY CONTACTS
PX	PRESSURE TRANSDUCER
SS	SURGE SUPPRESSOR
ST	SHUNT TRIP
TB1-6	TERMINAL PLUG, BOARD MOUNTED
TB1,2,3,9	TERMINAL BLOCKS
XFMR1	CONTROL TRANSFORMER
XFMR2	THREE PHASE TRANSFORMER