INSTALLATION INSTRUCTIONS

FIXTURE TYPE_____

P-ID-5900 FIXTURE ASSEMBLY

P/C **510480-0000**

DO NOT MODIFY OR ALTER THIS PRODUCT IN ANY WAY, OR INSTALL IN ANY FASHION WHICH IS CONTRARY TO THE INSTRUCTIONS CONTAINED HEREIN.
IF YOU HAVE ANY QUESTIONS REGARDING THIS PRODUCT OR THE INSTALLATION OF IT, PLEASE CALL LITECONTROL ENGINEERING AT 781-294-0100.

General Notes: Read Instructions completely before starting.

A. Lamp types available may vary within this fixture family but the general installation is the same for all P-ID-5900 fixtures.

B. Leaving foam wrapping on fixtures until mounting has been completed will help protect finish from damage.

INSTRUCTIONS:

1. Peel back foam wrapping from fixture and remove reflector and ballast cover on side of fixture closest to feed location by removing sheet metal screws. See View "A".

1. MOUNTING INDIVIDUAL FIXTURES: (Pendants are shipped separately)

A) Locate aircraft cables along a straight line in ceiling per dimensions shown in SIDE VIEW. (Refer to cable instruction sheet 510481).

B) Peel back foam wrapping from both ends of fixture. Remove 5/8" DIA knockout in socket plate for wire feed.

C) Insert swaged balls on bow cable into keyholes on end headers at both ends of fixture as shown.

D) Slide wireway cover into end cap as shown. Attach End Caps (shipped separately) to each end by inserting studs on End Cap thru holes in End Headers. Secure to fixture end with (2) #8-32 hex nuts. See View "B".

E) Lift fixture and mount pendants to ceiling. Level fixture by adjusting gripper up or down on cable to position fixture in its final location. Refer to cable instruction sheet 510481.

F) Bring wire feed into fixture and make wiring connections.

GO TO STEP 2 ON PAGE 2.

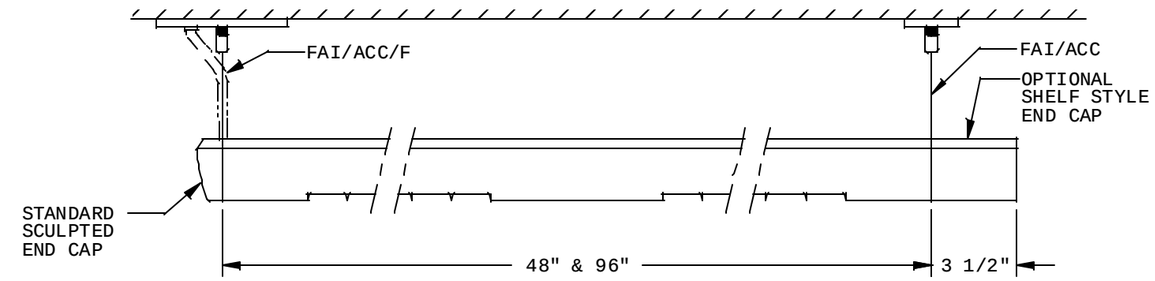

SIDE VIEW - INDIVIDUAL MOUNTED

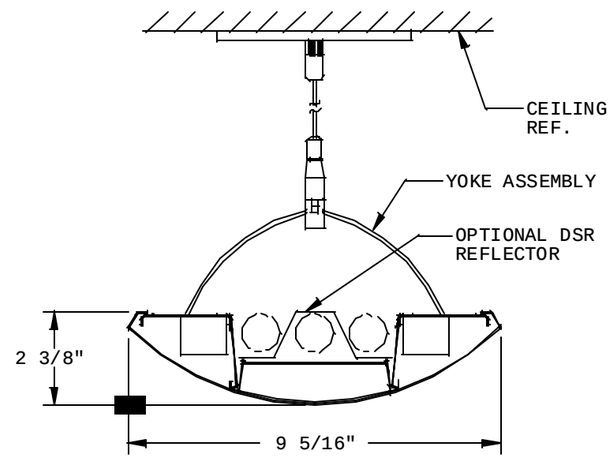

CROSS SECTION

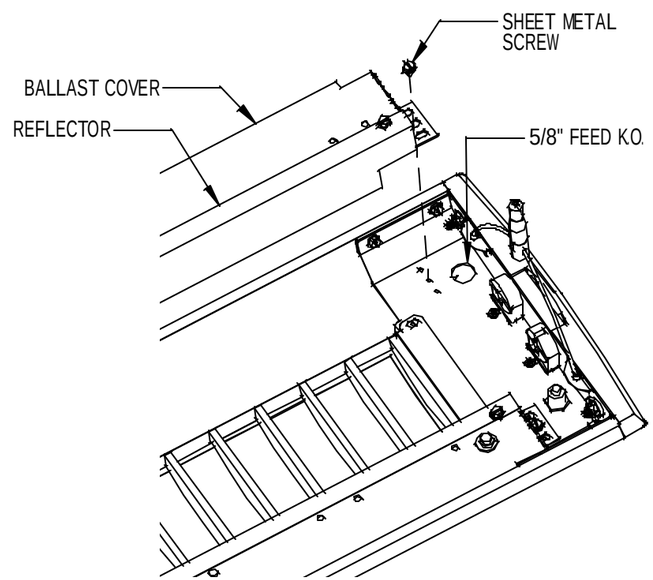

VIEW "A"

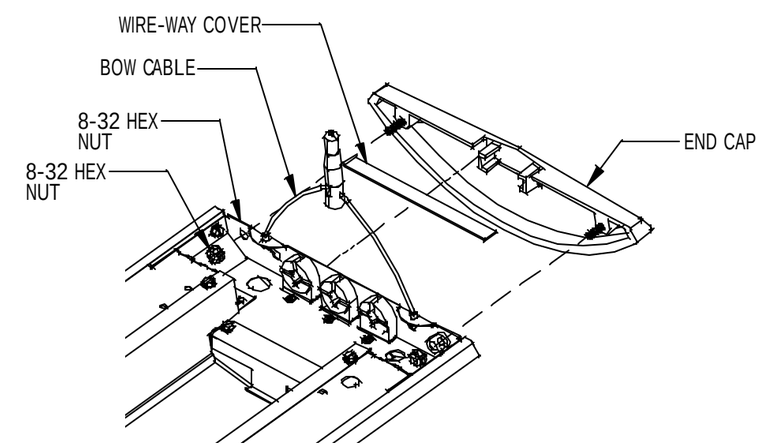

VIEW "B"

INSTALLATION INSTRUCTIONS

FIXTURE TYPE_____

P-ID-5900
FIXTURE ASSEMBLY

P/C **510480-0000**

DO NOT MODIFY OR ALTER THIS PRODUCT IN ANY WAY, OR INSTALL IN ANY FASHION WHICH IS CONTRARY TO THE INSTRUCTIONS CONTAINED HEREIN.
IF YOU HAVE ANY QUESTIONS REGARDING THIS PRODUCT OR THE INSTALLATION OF IT, PLEASE CALL LITECONTROL ENGINEERING AT 781-294-0100.

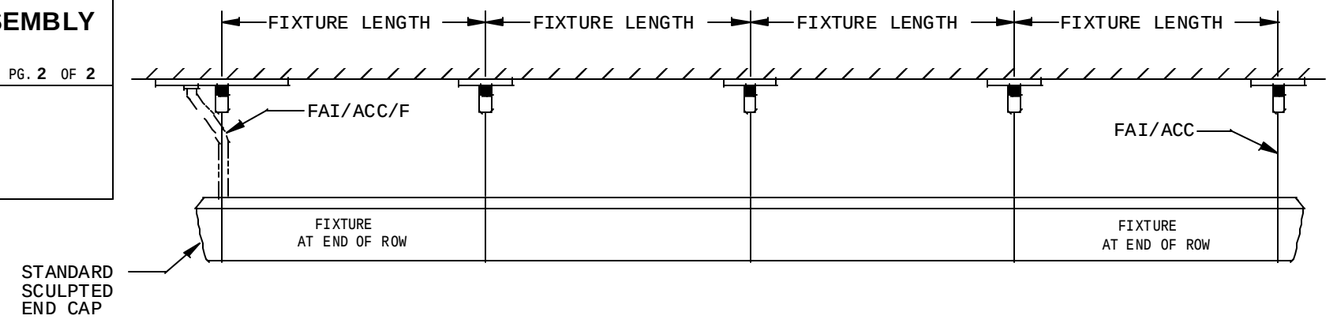

SIDE VIEW - ROW MOUNTED

INSTRUCTIONS con't:

2. MOUNTING ROWS OF FIXTURES:

A) Locate aircraft cables in ceiling, along a straight line as shown in Side View. Refer to Cable Instruction sheet 510481.

B) Starting with the fixture at one end of row, insert swaged balls on bow cable into keyholes in End Header as shown. Repeat at opposite end of fixture.

C) Remove a 5/8" knockout in Socket Plate for wire feed if aircraft cables are being used to hang fixtures. Feed may be run inside stems when they are used.

D) Attach End Cap to one end of fixtureper step 1D on page 1.

E) Lift fixture up and mount cable to ceiling. Refer to cable instruction sheet 510481.

F) At the far end of the 2nd fixture in row, insert swaged balls on bow cable into keyholes in End Header.

G) Lift this fixture up and attach cable to ceiling. Secure fixture joint with 1/4-20 hex head machine screws as shown in View "C".

H) Level fixtures by adjusting gripper gripper up or down on cable to position fixture in its final location. Level fixtures horizontally by loosening set screw in bottom of gripper and sliding gripper side to side on bow cable and retighten.

J) Repeat steps F thru H for each additional fixture in row.

3. Wire feed may be brought into abutting fixtures thru wireway opening in End Headers and connectors. Make wiring connections.

4. Replace reflectors and ballast covers.

5. INSTALLATION OF OPTIONAL OVERLAY:

A) Lay overlay on top of baffle as shown.

6. Clean exterior surfaces of fixture with a window cleaner.

Install lamps (by others) by inserting pins into socket and then rotating lamp 90 degrees.

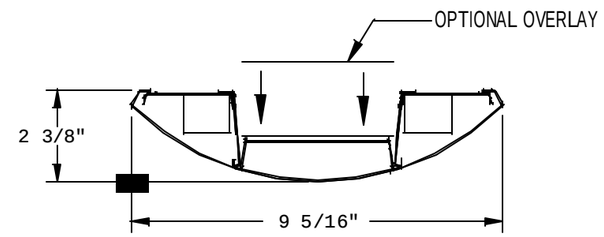

CROSS SECTION

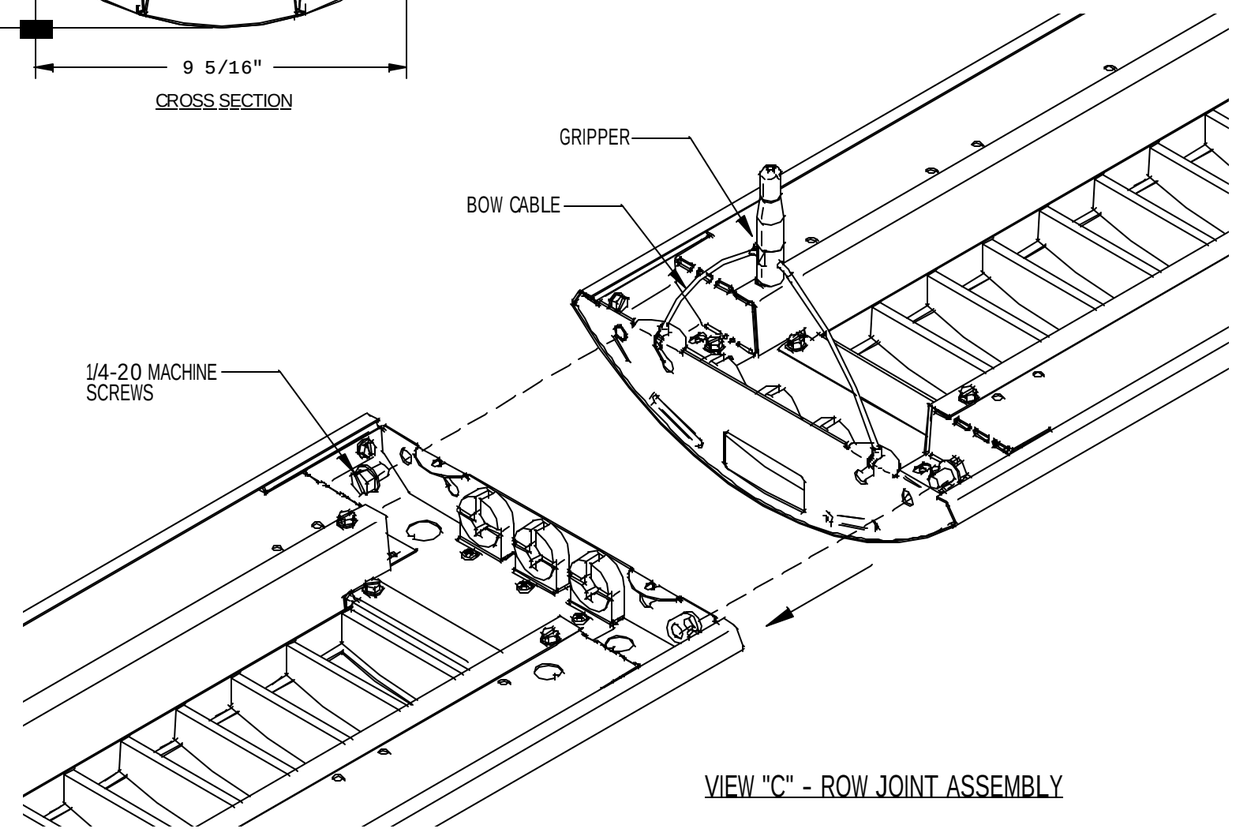

VIEW "C" - ROW JOINT ASSEMBLY