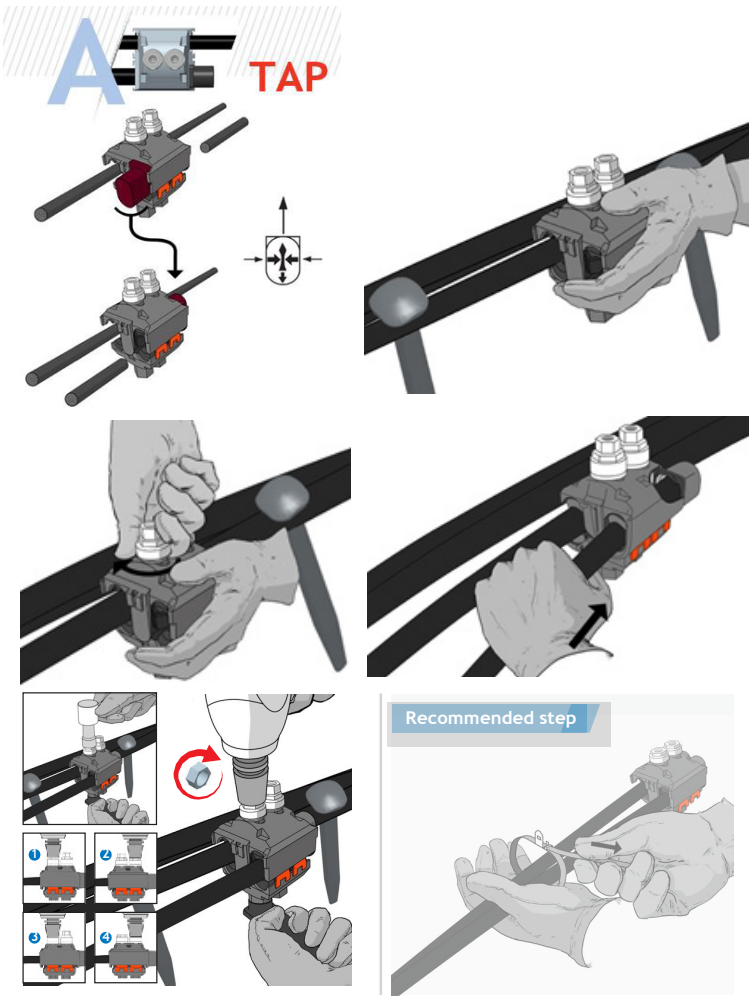

These connectors are self-declared as suitable for use on the line side of service equipment, in accordance with ANSI C119.5 standards.

This product should only be installed by a competent person with sufficient training in safety and installation practices regarding electrical equipment. Local legislation and work instructions issued by the employer per training and installation of such electrical equipment shall be respected at all times by said person, and take precedence over this instruction. BURNDY® accepts no liability concerning claims resulting from misuse, improper installation, ignored instructions or other national provisions, or neglected safety regulations.

This BURNDY® product may be installed with an impact wrench.

BURNDY® BIPC insulation piercing connectors can be installed with circular, regular-stranding, rigid and solid cable cores. The cables' working temperature is up to 194°F / 90°C.

If you have any questions or concerns regarding proper installation, please delay installation and seek clarification.

HUBBELL® | BURNDY®

B SPLICE

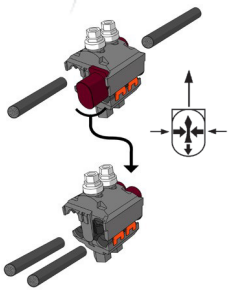

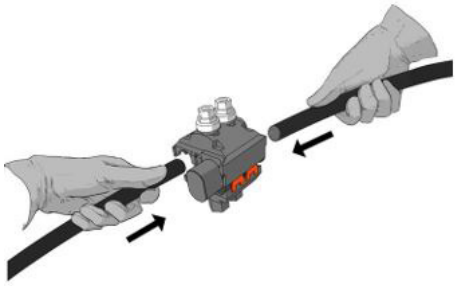

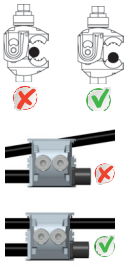

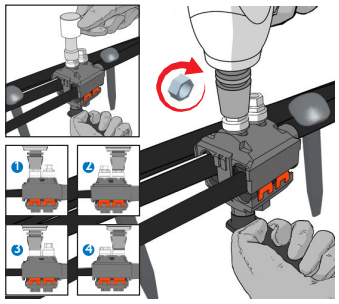

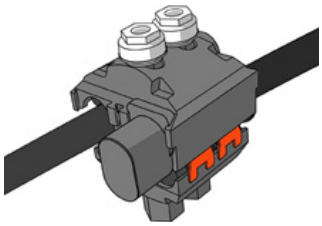

C DEAD-END

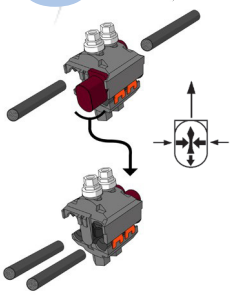

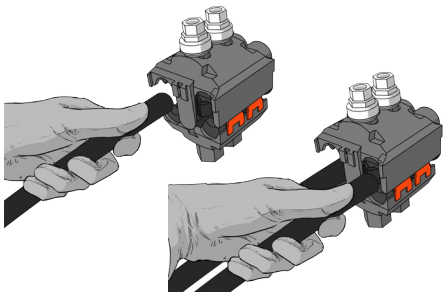

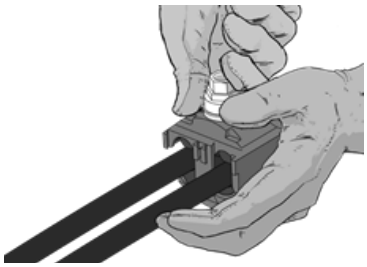

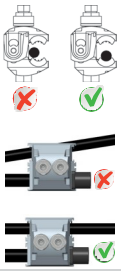

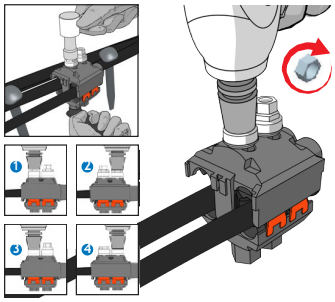

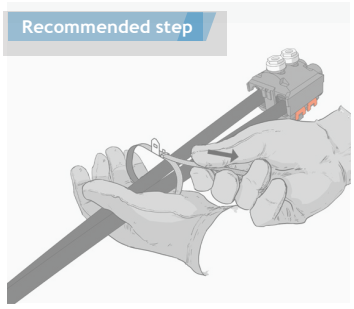

Size Marked on Connector, TTD__10	Burndy Catalog	Run/Tap	Insulation Thickness Range [in]	Wire Size - Run (Blue) / Tap (Red)																	
				14	12	10	8	6	4	3	2	1	1/0	2/0	3/0	4/0	250	300	350	500	750
5	BIPC2/014S	2/0-#6	0.045-0.083																		
		#8-#14	0.030-0.060																		
8	BIPC75014	750-3/0	0.050-0.110																		
		#10-#14	0.030-0.045																		
10	BIPC1/010SC	1/0-#8	0.040-0.080																		
		#2-#10	0.030-0.060																		
15	BIPC4/010S	4/0-#3	0.040-0.080																		
		#2-#10	0.030-0.060																		
18	BIPC1/08SC	1/0-#8	0.040-0.080																		
		1/0-#8	0.040-0.080																		
26	BIPC2504SC	250-#1	0.040-0.095																		
		4/0-#4	0.040-0.080																		
29	BIPC50010SC*	500-3/0	0.050-0.110																		
		#2-#10	0.030-0.063																		
40	BIPC3501/0SC	350-1/0	0.045-0.095																		
		350-1/0	0.045-0.095																		
43	BIPC5004SC	350(500**)-2/0	0.045-0.136																		
		4/0-#4	0.040-0.080																		
45	BIPC5001/0S	500-4/0	0.050-0.136																		
		350-1/0	0.045-0.095																		
50	BIPC5004/0SC*	500-4/0	0.050-0.136																		
		500-4/0	0.050-0.136																		
53	BIPC7502SC*	500(750**)-250	0.060-0.136																		
		4/0-#2	0.040-0.083																		
55	BIPC750250SC	500(750**)-250	0.060-0.136																		
		500-250	0.060-0.136																		

!! IMPORTANT REMINDER !!

MAIN side of the connector is the "open side."
TAP side of the connector is the side where the marking is located.

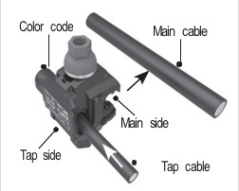

The above table denotes the cable range for each size of BURNDY BIPC connector as well as the corresponding 'TTD' marking on the connector

* Not cULus Listed

** Max run conductor size can only be achieved in TAP orientation, with cap removed

NOTE:

BURNDY Catalog Numbers showing suffix 'S' come with red spacer component, to be left in during install.

BURNDY Catalog Numbers showing suffix 'SC' come with red spacer component as well as end caps installed; end caps can be rearranged to meet connector install requirements (tap, splice, or dead-end).

BURNDY, LLC
47 East Industrial Park Drive
Manchester, NH 03109
1-800-346-4175
www.hubbell.com

ITEM # 50124720
REV. D