GAI-TRONICS® CORPORATION
A HUBBELL COMPANY

Model 7325-105 SmartSeries Outdoor Metallic RTU Enclosure

Confidentiality Notice

This manual is provided solely as an operational, installation, and maintenance guide and contains sensitive business and technical information that is confidential and proprietary to GAI-Tronics. GAI-Tronics retains all intellectual property and other rights in or to the information contained herein, and such information may only be used in connection with the operation of your GAI-Tronics product or system. This manual may not be disclosed in any form, in whole or in part, directly or indirectly, to any third party.

General Information

The Model 7325-105 RTU (Remote Terminal Unit) Outdoor Metallic Enclosure is designed to be a component in GAI-Tronics SmartSeries system. It mates with a SmartSeries handset or speaker amplifier to form a SmartSeries station.

When connected to a SmartSeries system, the station operates as a standard multi-party Page/Party® device. In addition, it supports supervised input circuits and a relay output (supervision optional). The following configurations are possible:

- 1 supervised input circuit and 1 supervised relay output (factory setting)
- 2 supervised input circuits and no relay output
- 2 supervised input circuits and 1 non-supervised relay output

NOTE: The relay output circuit is intended to be used with GAI-Tronics-approved equipment. The circuit may not support supervision of equipment that is not approved by GAI-Tronics.

How to Use the Assembly/Model

This section describes applications for the Model 7325-105 SmartSeries RTU Enclosure, its hardware, software configuration, interfaces and operation.

Application

The SmartSeries Station RTU is designed to be used with the SmartSeries amplifiers and handsets in a standard multi-party Page/Party® system. It is also possible to control an external device by activating and deactivating a single relay circuit located in the SmartSeries station enclosure. This circuit is referred to as a relay output. Terminal block TB3, located on the rear panel of the station enclosure, provides an interface with this relay.

In addition to the relay output capability, the RTU also provides two inputs. These circuits provide an interface to dry contact switches, (e.g., a pull box) that are monitored within the SmartSeries station. The SmartSeries station reports any switch activation to the Master Control Unit (MCU).

The relay output is factory-set to be supervised through input #1. Refer to Figure 1. However, you may elect to use input 1 by disconnecting supervision for the relay output.

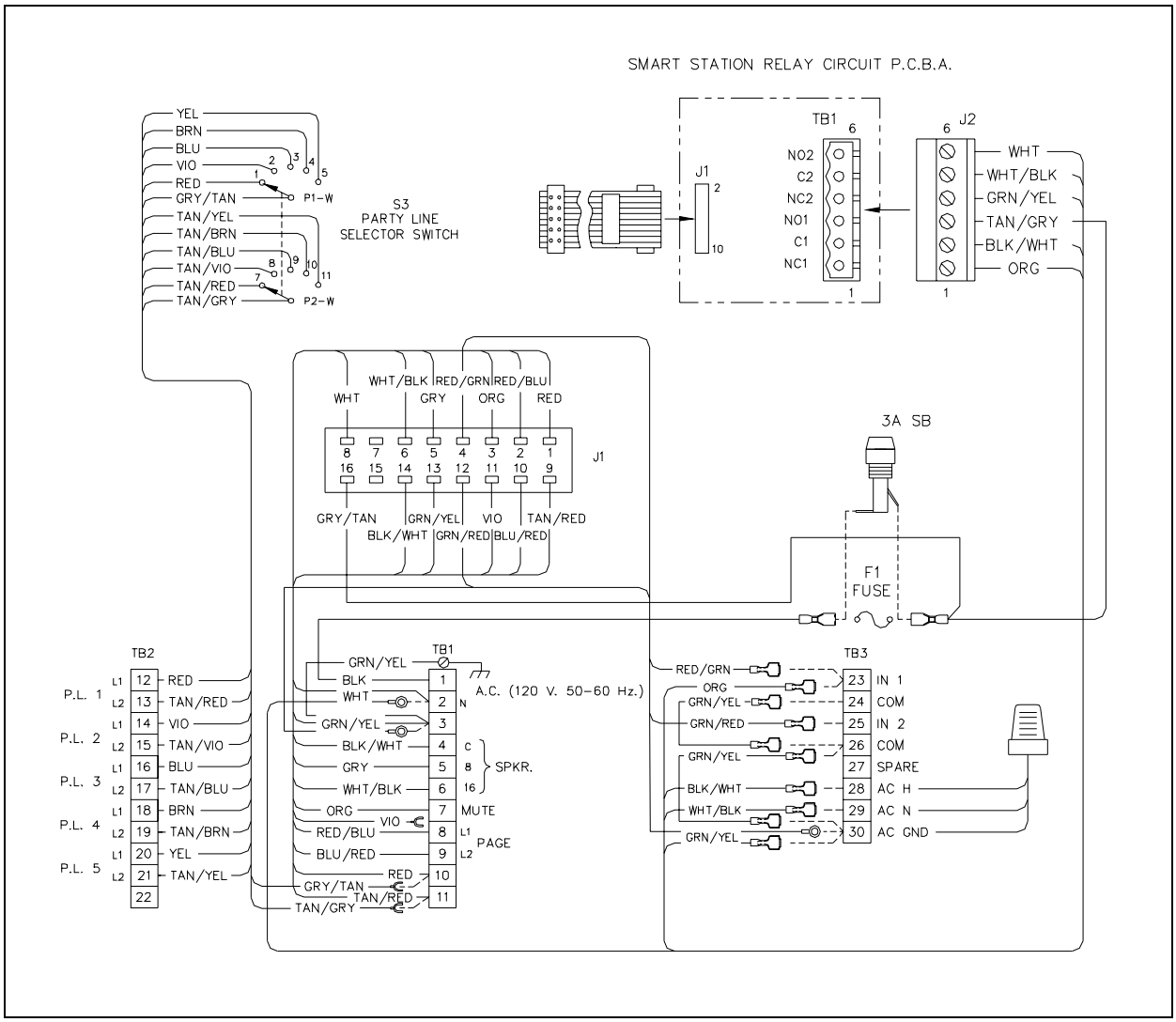

Figure 1.

Hardware Configuration

The SmartSeries RTU allows three choices of operational configurations. Select the configuration that best suits your need for circuits. The following table lists the RTU configurations:

Configuration	Inputs	Outputs
1	1 supervised input	1 supervised relay output (factory setting)
2	2 supervised inputs	No relay output
3	2 supervised inputs	1 non-supervised relay output

Configuration 1

In the first configuration, the relay output is supervised to continually ensure the integrity of the external circuit. The first input, IN 1, is used to support supervision of the relay output circuit. This wiring method requires the use of a 20 k-ohm, 2-watt resistor placed in parallel to the relay output device (e.g. a beacon or strobe) as shown in Figure 2.

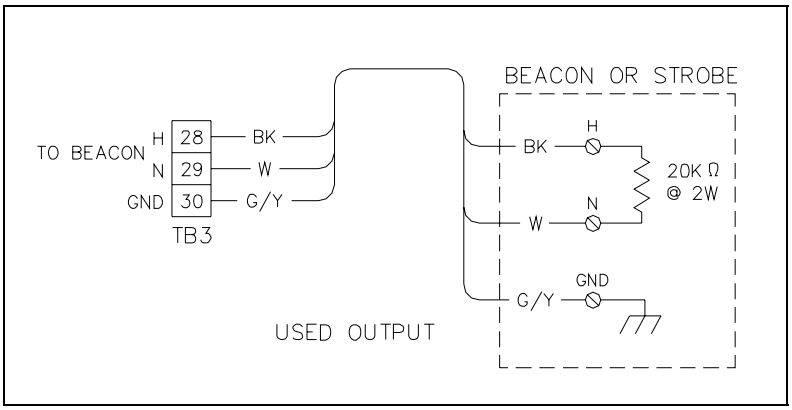

Figure 2. Beacon or Strobe

Wire the terminating resistor as close as possible to the beacon. Supervision is performed during non-activation of the relay output using IN 1. The second input, IN 2, remains available for detecting switch activations. The following section describes switch wiring choices. The RTU provides 120 V ac for beacon power on pins TB3-28, TB3-29, and TB3-30.

NOTE: This configuration is hardwired at the factory.

Configuration 2

The second configuration uses two supervised input circuits and does not make use of the single relay output. This configuration is accomplished by interfacing to terminal block TB3-23 and TB3-24 for IN 1 and TB3-25 and TB3-26 for IN 2.

The external dry contact switch, either normally open or normally closed respectively, should be in parallel to a 15 k-ohm resistor as shown in Figure 3.

A 5.1 k-ohm resistor should be in series to the 15 K-ohm resistor. This provides a voltage divider network used to detect a short or open across the external circuit's cabling.

This configuration requires that the orange wire from TB3-23 going to the relay output circuit be disconnected so as not to interfere with supervised operation.

Another method of performing supervision using multiple switches is shown in Figure 4. This method requires only one 20 k-ohm resistor that is placed in parallel to multiple normally open dry contact switches at the end of line (EOL).

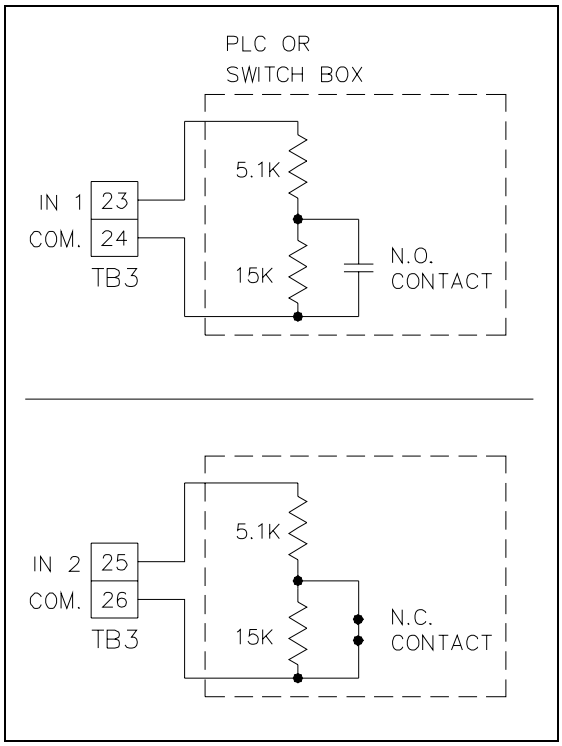

Figure 3. PLC or Switch Box

Normally Open and Normally Closed - Example

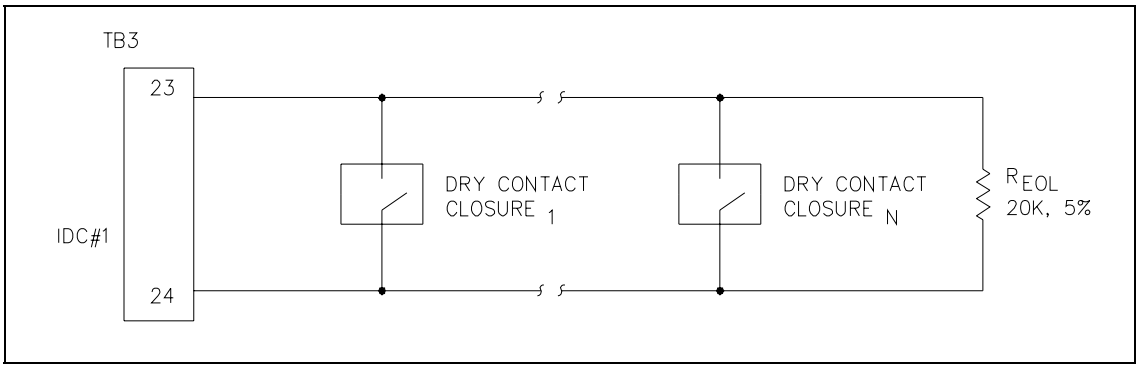

Figure 4. Input Line Supervision Multiple Switch - Example

Configuration 3

In the third configuration, the relay output circuit is non-supervised. This means the RTU can command a system device to activate or deactivate without the integrity of the external circuit being verified. In this configuration, both inputs are available.

NOTE: Unused inputs must be terminated at terminal block TB3 with a 20 k-ohm, 2-watt resistor. Resistors are supplied with the units. See Figure 5.

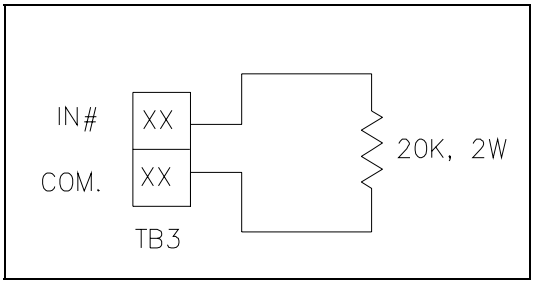

Figure 5. Unused Input

Software Configuration

The software configuration of the RTU is accomplished through the use of the System Start-up Tool (SST). The type of RTU is dependent on the hardware configuration. Before setting up the software, it is important to know how the inputs and outputs will be used.

Interface

Use the ribbon connector supplied with the unit to connect the SmartSeries relay circuit to the connector at the base of the SmartSeries station. Wiring to the RTU is performed by connecting the external circuits to the appropriate lugs on the TB3 terminal block located on the rear panel on the enclosure. The following table shows the wiring for TB3:

Terminal Block Lug No.	Label
TB3-23	IN 1
TB3-24	Common
TB3-25	IN 2
TB3-26	Common
TB3-27	Spare
TB3-28	Black (hot) 120 V ac 50/60 Hz, 3 amps max.
TB3-29	White (neutral) 120 V ac 50/60 Hz
TB3-30	Earth ground

The SmartSeries RTU is pre-wired from the factory to support 1 supervised input and 1 supervised relay output. To disable the supervision of the relay output circuit by IN 1, disconnect the orange wire going to the relay circuit card located at TB3-23. This is the only wiring modification necessary for any of the three RTU configurations.

Operation

The supervised input and relay output functions are supported by the ADVANCE system.

Installation

⚠ **CAUTION** ⚠ **Do not install this equipment in hazardous areas or areas other than those indicated on the approval listing in the Specification section of this manual. Such installation may cause a safety hazard and consequent injury or property damage.**

When installing an add-on station, consult the system connection diagram, Figure 7. These figures, when used in conjunction with the station installation information and cable layout guide, should provide all the information necessary to install additional Page/Party® stations.

Enclosure Placement

All GAI-Tronics Page/Party® units are wired in parallel. Good system layout design minimizes the cable required for each installation. GAI-Tronics multi-conductor cable, designed especially for this application, is recommended. The number, size, and color-coding of conductors are listed in the system connection diagram.

System layout and power cable length are very important when installing Page/Party® equipment. Although it varies for different systems, the general guideline is that the total power cable length should not exceed 1 mile (5280 feet) for 115 V ac systems. The total cable length is the most important consideration while cable length between the stations is generally not a factor.

Mounting

The Model 7325-105 Outdoor Metallic RTU Enclosure is supplied with top and bottom openings for conduit. We highly recommend using only the bottom opening. This helps to prevent water from leaking in through the opening or trapped moisture from entering through the conduit. If the top opening must be used, carefully seal around the fitting to prevent moisture from entering.

For specific mounting details, refer to Figure 6. There are four 0.437-inch diameter mounting holes in the corners of the amplifier enclosure. The suggested mounting height for all station enclosures is 54 inches (137 cm) up to the centerline of the enclosure.

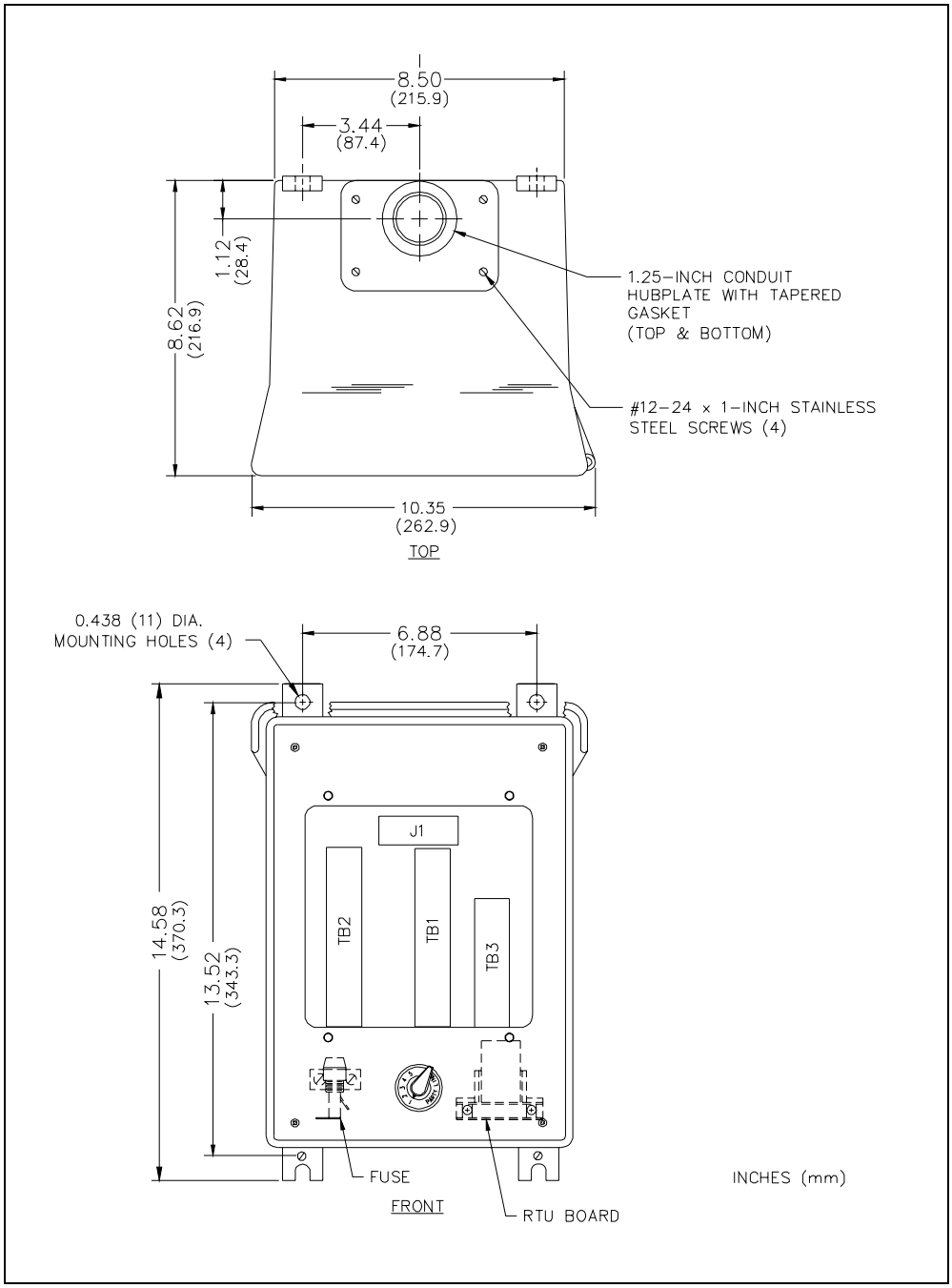

Figure 6. Model 7325-105 SmartSeries Outdoor Metallic RTU Enclosure

Wiring

Remove plastic plugs and install conduit to the enclosure. Feed the wiring through the conduit and bring it into the enclosure. Wire the station using Figure 7 as a guide. Follow the wire colors carefully because the colors noted in the figure correspond to GAI-Tronics 60029 Series multi-party cable. The wires must be spade-lugged and connected securely to the terminal block. An improper termination may result in diminished station performance.

Local Muting

Figure 7 illustrates local speaker muting when stations are completely assembled and paging operation occurs. Normally, when the station button is pressed, the paging speaker connected to that station is silenced (muted) to prevent acoustic feedback to the handset microphone. However, while the handset is in use for party line conversations, the paging speaker is “live” to enable paging calls from other stations.

To disable the mute feature, follow these instructions:

1. Locate the lugged violet wire attached to terminal point 7 (mute) on the terminal block within the enclosure.
2. Transfer the lugged violet wire to terminal point 8 (Page L1).

After any muting changes are made, unpack the station amplifier and install.

Mutual Muting

In the event that feedback occurs within an area and repositioning of the system speakers does not help, mutual muting may be used to correct this problem.

The following steps will mutually mute the adjacent amplifiers/handsets within a zone.

1. Ensure that the purple lugged wire is connected to terminal 7 of TB1.
2. Connect terminal TB1-7 of the handset station to TB1-7 of the station within the zone that is causing feedback. This is done by using the spare system wire (orange conductor) from within the system cable that runs between the stations.

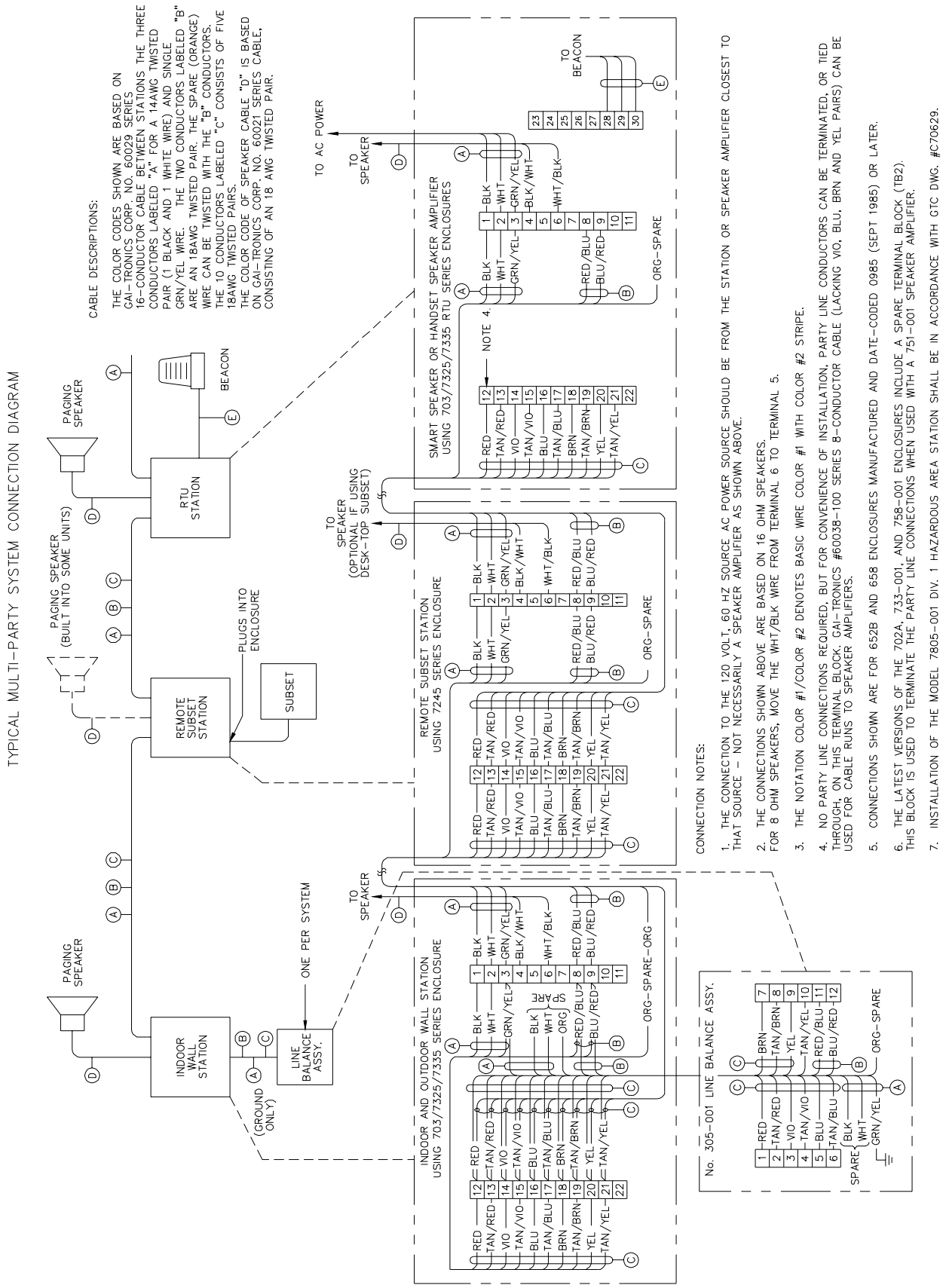

Figure 7. Wiring and System Layout Diagram

Maintenance

Regular inspection and a good preventive maintenance program will increase the reliability of your GAI-Tronics station. The GAI-Tronics Field Service Department can formulate a service contract suited to your facility's specific need for preventive maintenance.

In addition, the following procedure can be used to keep Page/Party® systems operating effectively.

⚠**WARNING** ⚠ **Before performing any of the following preventive maintenance steps, remove all power from the station.**

1. Remove the amplifier from the enclosure.
2. Visually check the interior of the enclosure for signs of contamination such as dust, condensation or process liquid.
3. Using the No. 10440-002 Maintenance Cable, plug the amplifier into the connector in the enclosure. Check, and if necessary, adjust the amplifier to maximize performance.
4. Reinstall the amplifier in the enclosure. Ensure that all gaskets and hardware are in place. Failure to install the gaskets, which also act as spacers, can result in damage to the connectors on the amplifiers and inside the enclosures and can cause system faults.

It may become necessary to re-terminate some or all of the enclosures in a system. If so, strip the wires back to clean copper and connect only one wire to each connector to allow for easier future troubleshooting.

To maintain system operations, we recommend keeping one SmartSeries® RTU per every ten installed units in the site maintenance inventory.

If the equipment requires service, contact your Regional Service Center for a return authorization number (RA#). Equipment should be shipped prepaid to GAI-Tronics with the return authorization number and a purchase order number. If the equipment is under warranty, repairs will be made without charge. Please include a written explanation of all defects to assist our technicians in their troubleshooting efforts. Call 800-492-1212 for help in identifying the Regional Service Center closest to you.

Troubleshooting

The following table lists some hints to aid technicians in troubleshooting.

Problem	Solution
Station responds to polling messages but the relay output does not respond.	Check for trouble report from station if the output is being supervised. The report will indicate what type of trouble has occurred. If the message, "Supervised Output Circuit" is reported, check relay circuit and supervision path.
Station does not respond to poll message.	Check and replace fuse on the back panel of the enclosure as well as fuses on the SmartSeries® device.
The following device fault message received at the MCU: "Supervised Input Circuit"	Check that the input circuit is properly terminated. Check the external circuit connected to either input of the RTU for a short or open. The input circuit number is identified on the device fault message.
Device fault message is not received but the input circuits do not activate an alarm.	Verify that the SST configuration is set up to report the alarm. Remove and replace the SmartSeries® Handset or Amplifier.
A device fault is not reported to the MCU but the output circuit does not respond to an activation command.	Check and replace the SmartSeries® station relay circuit card.
Relay output does not engage.	Ensure the ribbon cable from the J3 connector to the RTU board is attached correctly.
Feedback occurs during page only.	1. If a speaker is close to the station, try using the muting feature in amplifier enclosure at terminal blocks by connecting the violet wire at terminal 8 to terminal 7. See wiring diagram and refer to the mutual muting section of this manual. 2. Check line terminations. 3. Check location and orientation of speakers in the area. Feedback may be caused feedback by adjacent stations. 4. Call GAI-Tronics service for details.
Cross talk occurs.	One or more system cable pairs may be improperly terminated. Visually inspect the system cable for accidental crossing of cable pairs or grounds.

Specifications

Construction/Finish.....Sand-cast aluminum alloy, cam-style latch, hinged door with gasket; gray baked enamel

Mounting.....Wall, column, or pole (mounting kit required for pole mount), four 7/16-inch mounting holes

Connections.....Internal screw-type barrier terminal blocks

External controls..... Rotary selector switch

Dimensions..... 14.9 H × 10.8 W × 9.6 D inches (378 × 274 ×244 mm)

Shipping weight..... 20.4 lbs. (9.3 kg)

Approvals.....NRTL Listed for USA and Canada..... Class I, Div. 2, Groups A, B, C, D; Class II, Div. 2, Groups F and G; Class III, Div. 2

Outdoor environmental rating..... NEMA 3R

REPLACEMENT PARTS

Part Number	Description
12564-001	Party Line Selector Knob and Label Kit (5 pack)
51801-005	Fuse, Slo-Blo, 3 amp
12609-001	Harness/Switch Assembly
12505-001	Door Kit
12505-002	Door Handle Kit
12535-002	Hardware Kit (5 sets)
61210-016	Ribbon cable, 10-conductor, flat
69267-001	PCBA, SmartSeries® Relay Circuit

Warranty

Equipment. GAI-Tronics warrants for a period of one (1) year from the date of shipment, that any GAI-Tronics equipment supplied hereunder shall be free of defects in material and workmanship, shall comply with the then-current product specifications and product literature, and if applicable, shall be fit for the purpose specified in the agreed-upon quotation or proposal document. If (a) Seller's goods prove to be defective in workmanship and/or material under normal and proper usage, or unfit for the purpose specified and agreed upon, and (b) Buyer's claim is made within the warranty period set forth above, Buyer may return such goods to GAI-Tronics' nearest depot repair facility, freight prepaid, at which time they will be repaired or replaced, at Seller's option, without charge to Buyer. Repair or replacement shall be Buyer's sole and exclusive remedy. The warranty period on any repaired or replacement equipment shall be the greater of the ninety (90) day repair warranty or one (1) year from the date the original equipment was shipped. In no event shall GAI-Tronics warranty obligations with respect to equipment exceed 100% of the total cost of the equipment supplied hereunder. Buyer may also be entitled to the manufacturer's warranty on any third-party goods supplied by GAI-Tronics hereunder. The applicability of any such third-party warranty will be determined by GAI-Tronics.

Services. Any services GAI-Tronics provides hereunder, whether directly or through subcontractors, shall be performed in accordance with the standard of care with which such services are normally provided in the industry. If the services fail to meet the applicable industry standard, GAI-Tronics will re-perform such services at no cost to buyer to correct said deficiency to Company's satisfaction provided any and all issues are identified prior to the demobilization of the Contractor's personnel from the work site. Re-performance of services shall be Buyer's sole and exclusive remedy, and in no event shall GAI-Tronics warranty obligations with respect to services exceed 100% of the total cost of the services provided hereunder.

Warranty Periods. Every claim by Buyer alleging a defect in the goods and/or services provided hereunder shall be deemed waived unless such claim is made in writing within the applicable warranty periods as set forth above. Provided, however, that if the defect complained of is latent and not discoverable within the above warranty periods, every claim arising on account of such latent defect shall be deemed waived unless it is made in writing within a reasonable time after such latent defect is or should have been discovered by Buyer.

Limitations / Exclusions. The warranties herein shall not apply to, and GAI-Tronics shall not be responsible for, any damage to the goods or failure of the services supplied hereunder, to the extent caused by Buyer's neglect, failure to follow operational and maintenance procedures provided with the equipment, or the use of technicians not specifically authorized by GAI-Tronics to maintain or service the equipment. THE WARRANTIES AND REMEDIES CONTAINED HEREIN ARE IN LIEU OF AND EXCLUDE ALL OTHER WARRANTIES AND REMEDIES, WHETHER EXPRESS OR IMPLIED BY OPERATION OF LAW OR OTHERWISE, INCLUDING ANY WARRANTIES OF MERCHANTABILITY OR FITNESS FOR A PARTICULAR PURPOSE.

Return Policy

If the equipment requires service, contact your Regional Service Center for a return authorization number (RA#). Equipment should be shipped prepaid to GAI-Tronics with a return authorization number and a purchase order number. If the equipment is under warranty, repairs or a replacement will be made in accordance with the warranty policy set forth above. Please include a written explanation of all defects to assist our technicians in their troubleshooting efforts.

Call 800-492-1212 (inside the USA) or 610-777-1374 (outside the USA) for help identifying the Regional Service Center closest to you.