POLYCAST®

900 Series

w/ Removable Grates
Pre-Sloped Extra Heavy Duty System

PROJECT ID/
CONTRACT NO: _____

LOCATION: _____

ENGINEERING SPECIFICATION:

POLYCAST® 900 Series Pre-Sloped Trench Drain System is a .65% sloped trench drain, with 6 1/4" [159mm] wide x a nominal 48" [1219mm] long (standard) polyester polymer concrete channels with tongue and groove connections. Channels 605/610/615/620/625, non-sloping (neutrals) and half channels 605H/615H/625H will be supplied with drill outs for a 4" [102mm] bottom outlet. Grating locking devices, installation chairs and end caps with a 4" [102mm] drain drill out as required. Locking devices engage the iron frame and stay clear of the channel flow area. Drain sidewall pockets are available to hang channels from edge of forms during construction. Installation chairs are recommended for installation of drainage channels.

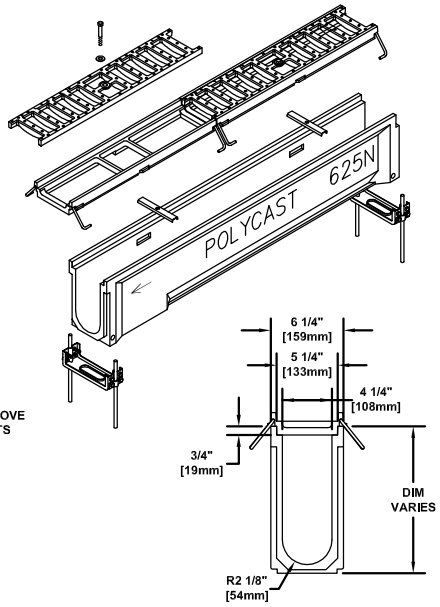

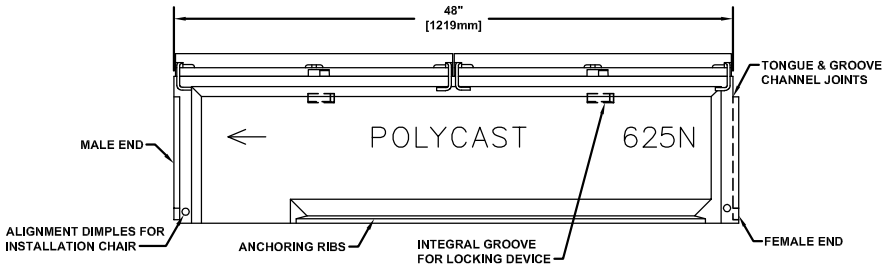

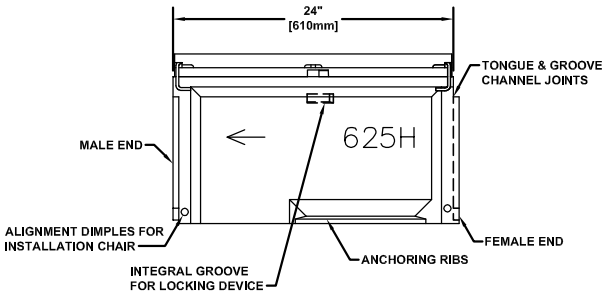

✓	Channel Number	Part No.
☐	Polyester Concrete Channels	DP06 _ _
☐	Vinyl Ester Concrete Channels	DV06 _ _

Meets the following Standards & Specifications:

- DIN 19580 / DIN EN 1433 Drainage Channels for Vehicular and Pedestrain Areas
- AASHTO H-20 and H-25 per AASHTO M-306 Drainage, Sewer, Utility and Related Castings
- Federal Aviation Administration (FAA) Advisory Circular AC 150/5320-6E Appendix 3. Design of Structures for Heavy Airplanes
- ASTM Standard D543, Test Method for Resistance of Plastics to Chemical Reagents
- ASTM Standard D570, Test Method for Water Absorption of Plastic
- ASTM Standard D576, Practice for Determination of Weight and Shape Change of Plastics Under Accelerated Service Conditions
- ASTM Standard G53, Recommended Practice for Operating Light and Water Exposure Apparatus for Exposure of Non-Metallic Materials
- ASTM Standard C78, Test Method for Flexural Strength of Concrete
- ASTM Standard C579, Test Method for Compressive Strength of Chemical Resistant Mortars and Monolithic Surfacing's

Frame/Grate Options (Select One)			
✓	Frame/Grate Type	Part No.	DIN Load Class
☐	Cleanout (Removable) Ductile Grate System	DG0970 w/DG0941D	Class D

✓	Options (Select All That Apply)	Part No.	Additional Specifications:
☐	Drain End Cap (6" Outlet)	DA0620D6	
☐	Installation Alignment Chair	DA0633	
☐	Extender Panels	DP0660	
☐	Shovel Head	DA0661	
☐	4" Strainer (For Bottom/End Outlet)	DA0662	
☐	End Cap (Inlet/Outlet)	DA0670M/DA0670	
☐	Channel Adaptor (Male/Female)	DP0699M/DP0699F	
☐	Locking Device For Ductile Iron Frames & Grates	DA0942	
☐	Stainless Steel Locking Device	DA0942S	

HUBBELL®

www.polycastdrain.com
Toll Free Number:
1-800-346-3062