Continental Industries

Water Distribution Products

PVC Water Fittings

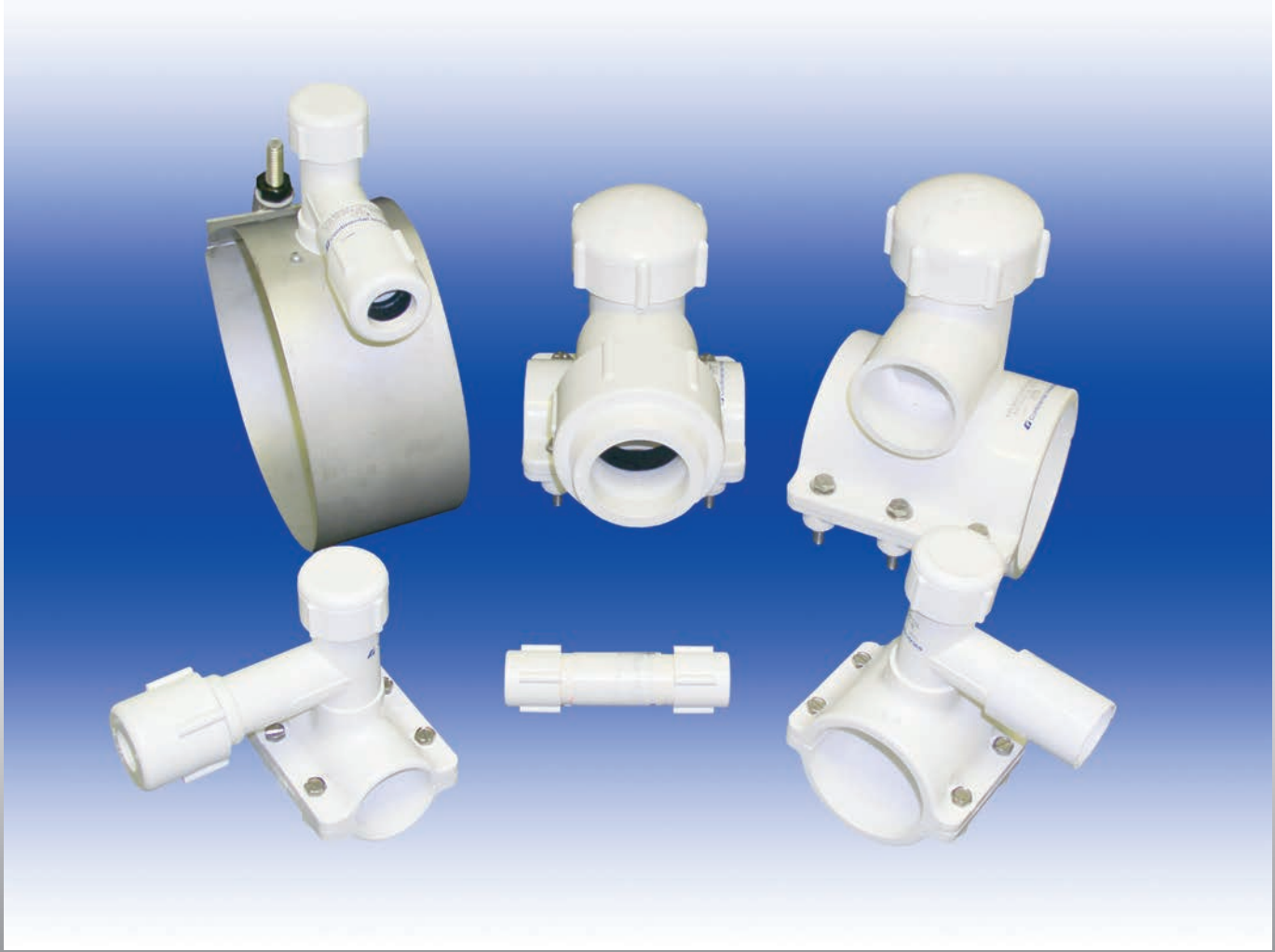

1-800-558-1373 or FAX 1-800-788-1668 • Visit www.conind.com

ABOUT US

Our Company

Continental Industries, headquartered in Tulsa , Oklahoma , was formed in 1958 and is today a leading manufacturer of connectors for the Gas Utility, Gas & Water Distribution, Propane, Plumbing and Cathodic Protection markets.

An ISO 9001 certified company, Continental Industries has manufacturing locations in Tulsa and Broken Arrow , Oklahoma. Our employees are committed to providing the best value to our customers.

Our full line of plastic and steel connector products are produced utilizing state-of-the-art injection molding machines, automatic screw machines, and CNC machining equipment. Our commitment to quality is evident in every step of our business processes. Renowned for our design and development of technologically advanced products, we provide our customers with reliable, cost-effective solutions to their “main to meter” service line installation, repair, or renewal problems.

thermOweld® , our exothermic welding materials and accessories products, provide a simple, efficient, cost effective method of permanently connecting two or more conductors utilizing a high temperature exothermic reaction between Aluminum and Copper Oxide to produce an almost pure copper weld. We manufacture all of our weld metal and molds in Oklahoma so you are certain of getting consistent, high quality products to satisfy your exothermic welding needs.

Our Vision

Simply stated, our vision is “To be a Sales and Customer Driven Company” . Our commitment to providing the best value to our customers is shared by the entire organization and is evidenced by both the number of long standing relationships we have gratefully developed over the years and the new relationships we are developing every day.

Why Use

Continental Industries is the industry leader in the manufacturing of plastic and steel mechanical fittings for the Gas & Water industry. From the Con-Stab ID Seal® to Scope®, steel saddles to HVT, quality and service is what drives us at Continental Industries.

Manufacturing fittings since 1958, Continental has the experience and confidence necessary to provide the best quality products on the market today. Continental Industries’ mechanical fittings will save you both time and money and give you the peace of mind that comes with using a quality product.

Continental Industries’ uses only the highest quality raw materials, engineered designs and manufacturing processes to ensure the consistent quality that makes Continental Industries’ products second to none.

With regional sales offices located throughout the United States, a Continental Industries representative is only a phone call away to help with any questions you may have.

Come experience what so many other satisfied customers have experienced, the excitement and family atmosphere that is Continental Industries!

TABLE OF CONTENTS

PVC Fasttap® Saddles 3-4
PVC Fasttap® Saddles for C-900 Mains 5-6
PVC Super Fasttap Saddles..... 7-8
PVC Fastthred Saddles 9-10
PVC Full Couplings 11-12
PVC End Caps.....12
PVC Reducer Couplings.....12
PVC 3-Way Tees.....13
PVC 90° Elbows 13
PVC Adapter Couplings 13
Pipe Charts.....14

PVC FASTTAP®

Plastic Saddle Punch Tee For Use On All PVC and PE Mains

The FASTTAP® PVC Saddle Tee is the most reliable and easy to use method of adding service connections to a plastic main. A live main can be tapped under full pressure. Simply bolt on the FASTTAP® saddle, connect the service line and then tap the main with the built-in coupon retaining punch. The punch will serve as an emergency shut-off valve and may be left in the closed position until service is needed.

No Corporation Stops!
No Tapping Machines!

One Tap Does It All!

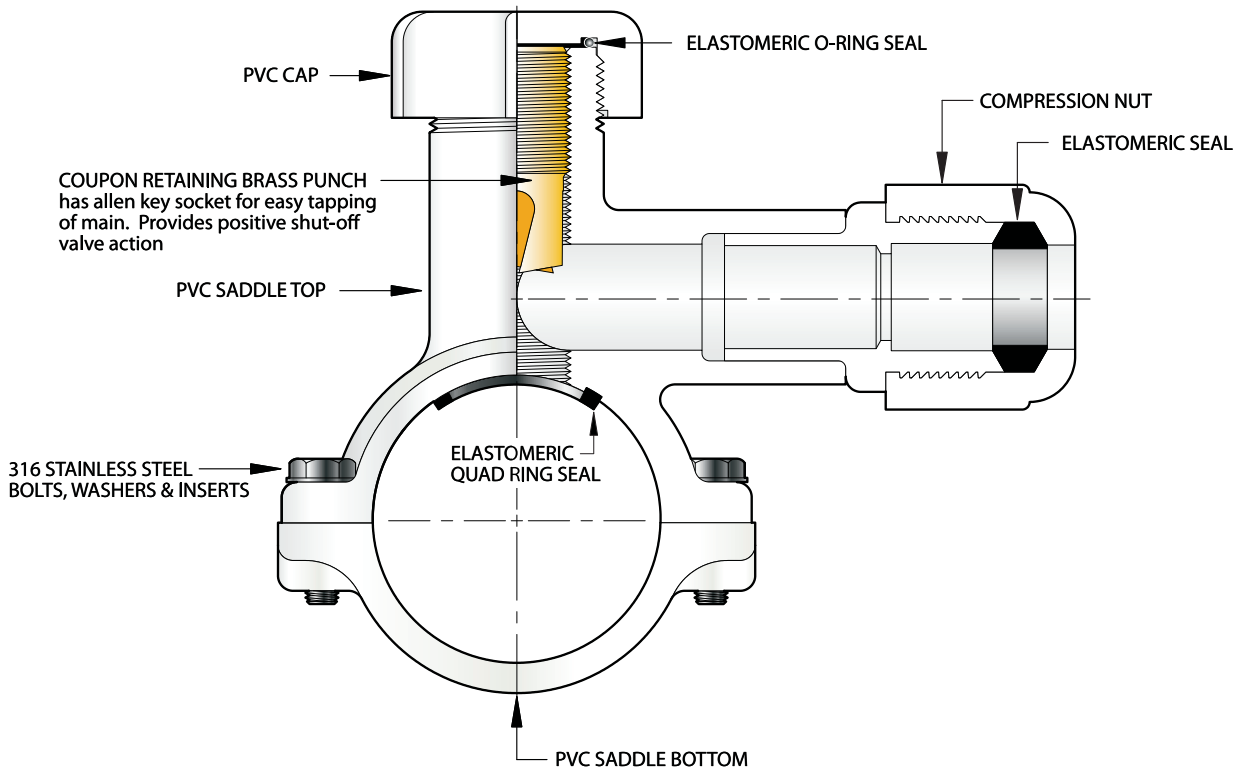

- Full wrap around saddle design eliminates stress points being applied to main
- Tapping process uses simple combination tapping tool eliminating cumbersome tapping machines.
- Tapping cutter retains the coupon then functions as a cut-off valve eliminating corporation stops.
- Manufactured from noncorrosive materials.
  - PVC with PPI HDB Listing
  - 316 Stainless Steel Bolts
  - Brass Cutter
- Available to work with 1”-12” iron pipe size mains.
- Available with 3/4” to 1” PVC, PE, PB or Copper Compression outlets, PVC solvent-weld outlets and threaded adapter outlets.
- Application may be for wet or dry taps.
- See www.nsf.org for Continental’s NSF Listing to Standard 61.
- Reduces installation time by 50%.

PVC FASTTAP® SADDLES

PVC FASTTAP SADDLES for IPS Mains

OUTLET	MAIN SIZE◊	PART NUMBER 13/16" CR PUNCH
3/4" IPS FEMALE SLIP OR 1" IPS MALE SLIP SOLVENT WELD	1"	5361-14-0713-00†
	1 1/4"	5261-15-0713-00
	2"	5261-17-0713-00
	2 1/2"	5261-18-0713-00
	3"	5261-19-0713-00
	3 1/2"	5261-20-0713-00‡
	4"	5261-21-0713-00
	5"	5261-23-0713-00‡
	6"	5261-24-0713-00
	8"	5261-26-0713-00‡
	10"	5261-27-0713-00‡
	12"	5261-28-0713-00‡
1" IPS FEMALE SLIP SOLVENT WELD	1"	5361-14-0714-00†
	1 1/4"	5261-15-0714-00
	2"	5261-17-0714-00
	2 1/2"	5261-18-0714-00
	3"	5261-19-0714-00
	3 1/2"	5261-20-0714-00‡
	4"	5261-21-0714-00
	5"	5261-23-0714-00‡
	6"	5261-24-0714-00
	8"	5261-26-0714-00‡
	10"	5261-27-0714-00‡
	12"	5261-28-0714-00‡
3/4" MPT	1"	5361-14-0913-00†
	1 1/4"	5261-15-0913-00
	2"	5261-17-0913-00
	2 1/2"	5261-18-0913-00
	3"	5261-19-0913-00‡
	3 1/2"	5261-20-0913-00
	4"	5261-21-0913-00
	5"	5261-23-0913-00‡
	6"	5261-24-0913-00
	8"	5261-26-0913-00‡
	10"	5261-27-0913-00‡
	12"	5261-28-0913-00‡
1" MPT	1"	5361-14-0914-00†
	1 1/4"	5261-15-0914-00
	2"	5261-17-0914-00
	2 1/2"	5261-18-0914-00
	3"	5261-19-0914-00
	3 1/2"	5261-20-0914-00‡
	4"	5261-21-0914-00
	5"	5261-23-0914-00‡
	6"	5261-24-0914-00
	8"	5261-26-0914-00‡
	10"	5261-27-0914-00‡
	12"	5261-28-0914-00‡
3/4" FPT	1"	5361-14-1513-00†
	1 1/4"	5261-15-1513-00
	2"	5261-17-1513-00
	2 1/2"	5261-18-1513-00
	3"	5261-19-1513-00
	3 1/2"	5261-20-1513-00‡
	4"	5261-21-1513-00
	5"	5261-23-1513-00‡
	6"	5261-24-1513-00
	8"	5261-26-1513-00‡
	10"	5261-27-1513-00‡
	12"	5261-28-1513-00‡

OUTLET	Main Size◊	PART NUMBER 13/16" CR PUNCH
1" FPT	1"	5361-14-1514-00†
	1 1/4"	5261-15-1514-00
	2"	5261-17-1514-00
	2 1/2"	5261-18-1514-00
	3"	5261-19-1514-00
	3 1/2"	5261-20-1514-00‡
	4"	5261-21-1514-00
	5"	5261-23-1514-00‡
	6"	5261-24-1514-00
	8"	5261-26-1514-00‡
	10"	5261-27-1514-00‡
	12"	5261-28-1514-00‡
3/4" CTS (7/8" OD) COMPRESSION△	1"	5361-14-2506-00†
	1 1/4"	5261-15-2506-00
	2"	5261-17-2506-00
	2 1/2"	5261-18-2506-00
	3"	5261-19-2506-00
	3 1/2"	5261-20-2506-00‡
	4"	5261-21-2506-00
	5"	5261-23-2506-00‡
	6"	5261-24-2506-00
	8"	5261-26-2506-00‡
	10"	5261-27-2506-00‡
	12"	5261-28-2506-00‡
1" CTS (1 1/8" OD) COMPRESSION△	1"	5361-14-2508-00†
	1 1/4"	5261-15-2508-00
	2"	5261-17-2508-00
	2 1/2"	5261-18-2508-00
	3"	5261-19-2508-00
	3 1/2"	5261-20-2508-00‡
	4"	5261-21-2508-00
	5"	5261-23-2508-00‡
	6"	5261-24-2508-00
	8"	5261-26-2508-00‡
	10"	5261-27-2508-00‡
	12"	5261-28-2508-00‡
3/4" IPS COMPRESSION△	1"	5361-14-2513-00†
	1 1/4"	5261-15-2513-00
	2"	5261-17-2513-00
	2 1/2"	5261-18-2513-00
	3"	5261-19-2513-00
	3 1/2"	5261-20-2513-00‡
	4"	5261-21-2513-00
	5"	5261-23-2513-00‡
	6"	5261-24-2513-00
	8"	5261-26-2513-00‡
	10"	5261-27-2513-00‡
	12"	5261-28-2513-00‡
1" IPS COMPRESSION△	1"	5361-14-2514-00†
	1 1/4"	5261-15-2514-00
	2"	5261-17-2514-00
	2 1/2"	5261-18-2514-00
	3"	5261-19-2514-00
	3 1/2"	5261-20-2514-00‡
	4"	5261-21-2514-00
	5"	5261-23-2514-00‡
	6"	5261-24-2514-00
	8"	5261-26-2514-00‡
	10"	5261-27-2514-00‡
	12"	5261-28-2514-00‡

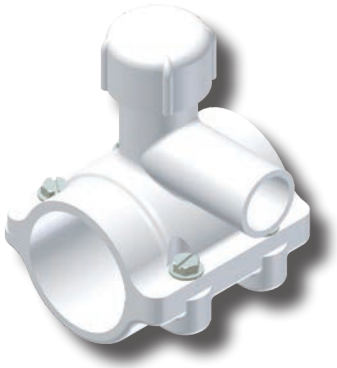

33-2940-00
Combination Tapping Tool & Saddle Bolt Wrench

For sizes not listed, contact Continental Industries.
PVC Fasttaps are rated at 200 psi.
◊ = Main sizes are for OD controlled pipe. Reference Tables 1, 2, 3, 4 & 5 on page 14.
△ = Compression fittings are for OD controlled tubing or pipe and are supplied without stiffeners. Reference Tables 1, 3 & 4 on page 14.
Recommended accessories; 33-2940-00 ~ Combination Tapping Tool & Saddle Bolt Wrench for Fasttaps
† = 1" IPS mains are furnished with 1/2" CR punch.
‡ = With stainless steel band strap.

PVC FASTTAP®

Plastic Saddle Punch Tee For Use On C-900 PVC Mains

The FASTTAP® PVC Saddle Tee is the most reliable and easy to use method of adding service connections to a plastic main. A live main can be tapped under full pressure. Simply bolt on the FASTTAP® saddle, connect the service line and then tap the main with the built-in coupon retaining punch. The punch will serve as an emergency shut-off valve and may be left in the closed position until service is needed.

No Corporation Stops!
No Tapping Machines!

One Tap Does It All!

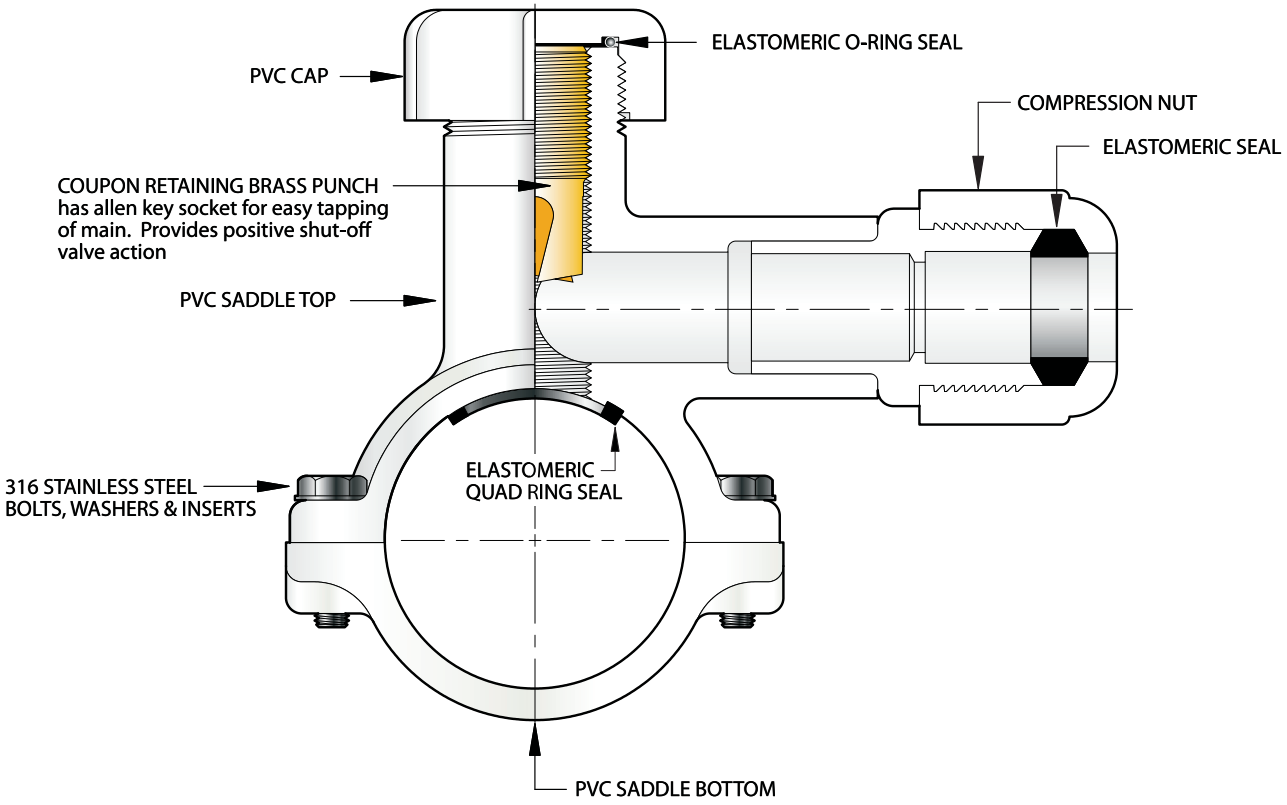

- Full wrap around saddle design eliminates stress points being applied to main.
- Tapping process uses simple combination tapping tool eliminating cumbersome tapping machines.
- Tapping cutter retains the coupon then functions as a cut-off valve eliminating corporation stops.
- Manufactured from noncorrosive materials.
  - PVC with PPI HDB Listing
  - 316 Stainless Steel Bolts
  - Brass Cutter
- Available to work with 4"-10" AWWA C-900 size mains.
- Available with 3/4" to 1" PVC, PE, PB or Copper Compression outlets, PVC solvent-weld outlets and threaded adapter outlets.
- Application may be for wet or dry taps.
- See www.nsf.org for Continental's NSF Listing to Standard 61.
- Reduces installation time by 50%.

PVC FASTTAP® SADDLES

PVC FASTTAP SADDLES for C-900 Mains

OUTLET	MAIN SIZE◊	PART NUMBER 13/16" CR PUNCH
3/4" IPS FEMALE SLIP OR 1" IPS MALE SLIP	4" C-900	5263-30-0713-00
	6" C-900	5263-31-0713-00
	8" C-900	5263-32-0713-00
	10" C-900	5263-33-0713-00‡
1" IPS FEMALE SLIP SOLVENT WELD	4" C-900	5263-30-0714-00
	6" C-900	5263-31-0714-00
	8" C-900	5263-32-0714-00
	10" C-900	5263-33-0714-00‡
3/4" MPT	4" C-900	5263-30-0913-00
	6" C-900	5263-31-0913-00
	8" C-900	5263-32-0913-00
	10" C-900	5263-33-0913-00‡
1" MPT	4" C-900	5263-30-0914-00
	6" C-900	5263-31-0914-00
	8" C-900	5263-32-0914-00
	10" C-900	5263-33-0914-00‡
3/4" FPT	4" C-900	5263-30-1513-00
	6" C-900	5263-31-1513-00
	8" C-900	5263-32-1513-00
	10" C-900	5263-33-1513-00‡
1" FPT	4" C-900	5263-30-1514-00
	6" C-900	5263-31-1514-00
	8" C-900	5263-32-1514-00
	10" C-900	5263-33-1514-00‡
3/4" CTS (7/8" OD) COMPRESSION△	4" C-900	5263-30-2506-00
	6" C-900	5263-31-2506-00
	8" C-900	5263-32-2506-00
	10" C-900	5263-33-2506-00‡
1" CTS (1 1/8" OD) COMPRESSION△	4" C-900	5263-30-2508-00
	6" C-900	5263-31-2508-00
	8" C-900	5263-32-2508-00
	10" C-900	5263-33-2508-00‡
3/4" IPS COMPRESSION△	4" C-900	5263-30-2513-00
	6" C-900	5263-31-2513-00
	8" C-900	5263-32-2513-00
	10" C-900	5263-33-2513-00‡
1" IPS COMPRESSION△	4" C-900	5263-30-2514-00
	6" C-900	5263-31-2514-00
	8" C-900	5263-32-2514-00
	10" C-900	5263-33-2514-00‡

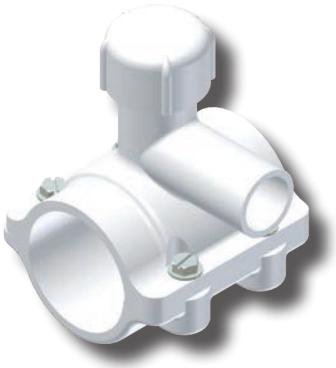

For sizes not listed, contact Continental Industries.
PVC Fasttaps are rated at 200 psi.
◊ = Main sizes are for OD controlled pipe. Reference Table 2 on page 14.
△ = Compression fittings are for OD controlled tubing or pipe and are supplied without stiffeners.
Reference Tables 1, 3 & 4 on page 14.
Recommended accessories; 33-2940-00 ~ Combination Tapping Tool & Saddle Bolt Wrench for Fasttaps
‡ = With stainless steel band strap.

33-2940-00
Combination Tapping Tool & Saddle Bolt Wrench

PVC SUPER FASTTAP®

Plastic Saddle Punch Tee For Use On All PVC and PE Mains

The FASTTAP® PVC Saddle Tee is the most reliable and easy to use method of adding service connections to a plastic main. A live main can be tapped under full pressure. Simply bolt on the FASTTAP® saddle, connect the service line and then tap the main with the built-in coupon retaining punch. The punch will serve as an emergency shut-off valve and may be left in the closed position until service is needed.

No Corporation Stops!
No Tapping Machines!

One Tap Does It All!

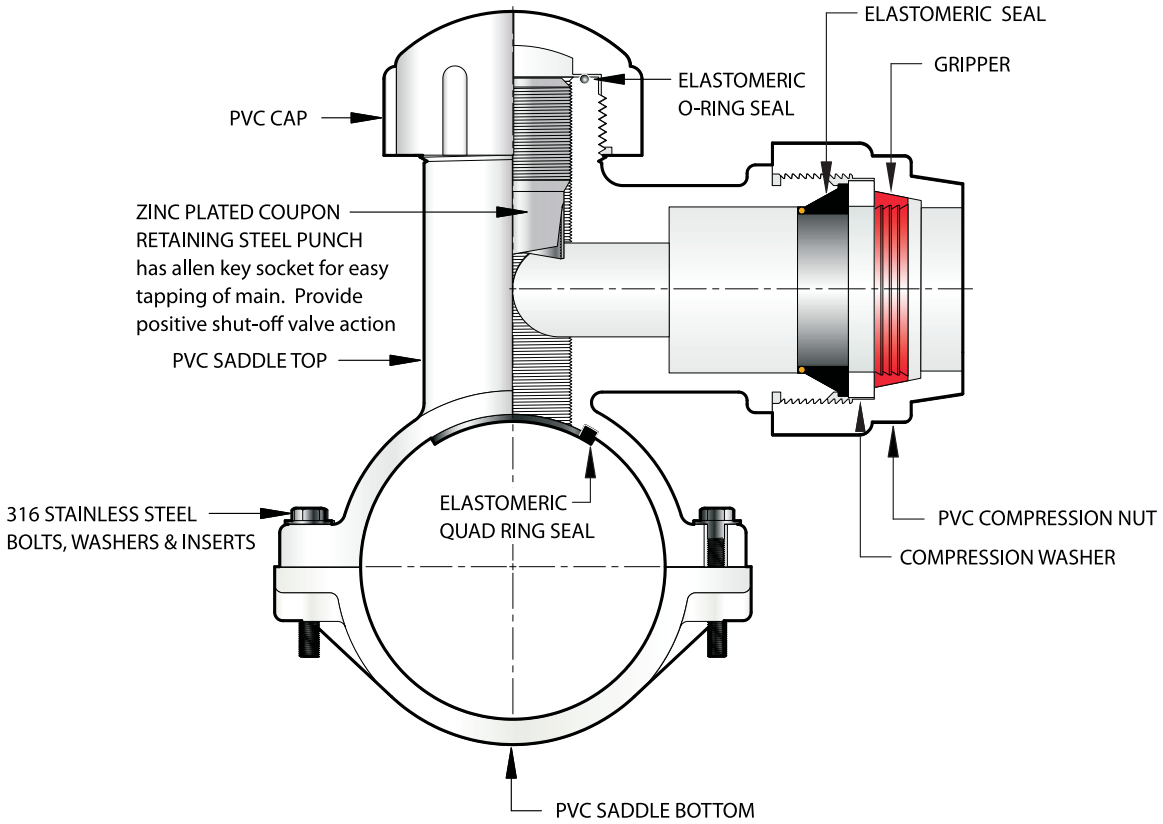

- Full wrap around saddle design eliminates stress points being applied to main.
- Tapping process uses simple combination tapping tool eliminating cumbersome tapping machines.
- Tapping cutter retains the coupon then functions as a cut-off valve eliminating corporation stops.
- Manufactured from noncorrosive materials.
  - PVC with PPI HDB Listing
  - 316 Stainless Steel Bolts
- Available to work with 2”-6” iron pipe size mains.
- Available with 1 1/4” and 2” PVC, PE or PB
- Compression outlets and 1 1/4”, 1 1/2” & 2” PVC solvent-weld outlets.
- Application may be for wet or dry taps.
- See www.nsf.org for Continental’s NSF Listing to Standard 61.
- Reduces installation time by 50%.

PVC SUPER FASTTAP® SADDLES

PVC SUPER FASTTAP SADDLES for IPS Mains

OUTLET	MAIN SIZE◊	PART NUMBER 1 1/2" CR PUNCH
1 1/4" IPS SOCKET	2"	5161-17-0715-00
	3"	5161-19-0715-00
	4"	5161-21-0715-00
	6"	5161-24-0715-00
1 1/2" IPS SOCKET	2"	5161-17-0716-00
	3"	5161-19-0716-00
	4"	5161-21-0716-00
	6"	5161-24-0716-00
2" IPS SOCKET	2"	5161-17-0717-00
	3"	5161-19-0717-00
	4"	5161-21-0717-00
	6"	5161-24-0717-00
1 1/4" IPS COMPRESSION△	2"	5161-17-2515-00
	3"	5161-19-2515-00
	4"	5161-21-2515-00
	6"	5161-24-2515-00
2" IPS COMPRESSION△	2"	5161-17-2517-00
	3"	5161-19-2517-00
	4"	5161-21-2517-00
	6"	5161-24-2517-00

For sizes not listed, contact Continental Industries.
PVC Super Fasttaps are rated at 200 psi.
◊ = Main sizes are for OD controlled pipe. Reference Tables 1, 2, 3, 4 & 5 on page 14.
△ = Compression fittings are for OD controlled tubing or pipe and are supplied without stiffeners. Reference Tables 1, 3 & 4 on page 14.
Recommended accessories; 33-4363-00 ~ 1/2" Square Drive Key, Bushing and Socket Adapter

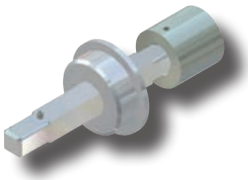

33-4363-00
1/2" Square Drive Key, Bushing and Socket Adapter

PVC FASTTHRED

Plastic Saddle For Use On All PVC and PE Mains

Continental's Fastthred PVC saddle is a reliable and economical method of connecting services to a plastic main. On a dry main where a service shutoff is not required, the service line may be connected directly to the saddle. Where a shutoff is required, a corporation stop may be used on either a dry or wet main.

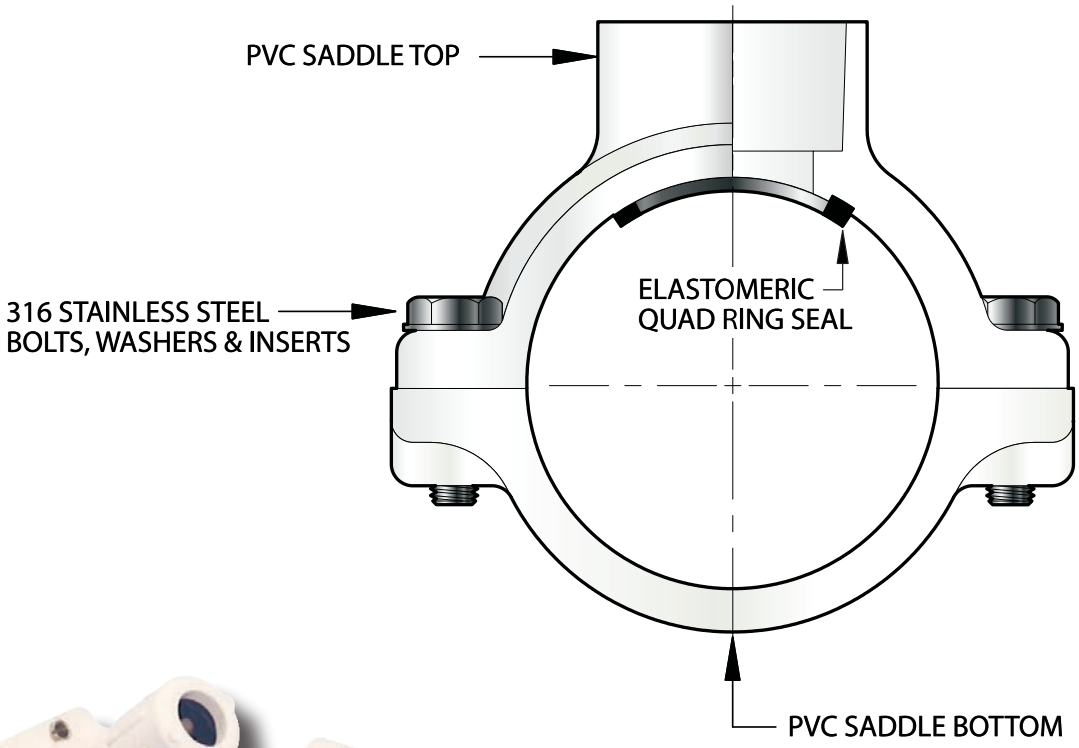

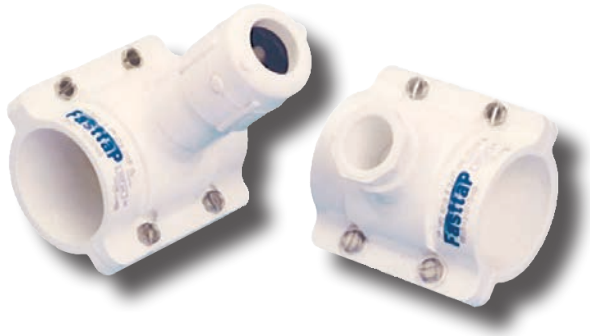

- PVC saddles for IPS mains.
- Excellent for dry taps and irrigation systems.
- Available in 1" thru 8" iron pipe size mains.
- Manufactured from noncorrosive materials.
  - PVC with PPI HDB Listing
  - 316 Stainless Steel Bolts
- Available to work with 1"-8" iron pipe size mains.
- Available with 3/4" to 1" PVC, PE, PB or Copper Compression outlets, PVC solvent-weld outlets and threaded adapter outlets.
- See www.nsf.org for Continental's NSF Listing to Standard 61.

PVC FASTTHRED SADDLES

OUTLET	MAIN SIZE◊	PART NUMBER
3/4" IPS FEMALE SLIP SOLVENT WELD	1"	0063-14-0713-00
	1 1/4"	0063-15-0713-00
	2"	0063-17-0713-00
	2 1/2"	0063-18-0713-00
	3"	0063-19-0713-00
	3 1/2"	0063-20-0713-00‡
	4"	0063-21-0713-00
	5"	0063-23-0713-00‡
	6"	0063-24-0713-00
	8"	0063-26-0713-00‡
1" IPS FEMALE SLIP SOLVENT WELD	1"	0063-14-0714-00
	1 1/4"	0063-15-0714-00
	2"	0063-17-0714-00
	2 1/2"	0063-18-0714-00
	3"	0063-19-0714-00
	3 1/2"	0063-20-0714-00‡
	4"	0063-21-0714-00
	5"	0063-23-0714-00‡
	6"	0063-24-0714-00
	8"	0063-26-0714-00‡
3/4" MPT	1"	0063-14-0913-00
	1 1/4"	0063-15-0913-00
	2"	0063-17-0913-00
	2 1/2"	0063-18-0913-00
	3"	0063-19-0913-00‡
	3 1/2"	0063-20-0913-00
	4"	0063-21-0913-00
	5"	0063-23-0913-00‡
	6"	0063-24-0913-00
	8"	0063-26-0913-00‡
1" MPT	1"	0063-14-0914-00
	1 1/4"	0063-15-0914-00
	2"	0063-17-0914-00
	2 1/2"	0063-18-0914-00
	3"	0063-19-0914-00
	3 1/2"	0063-20-0914-00‡
	4"	0063-21-0914-00
	5"	0063-23-0914-00‡
	6"	0063-24-0914-00
	8"	0063-26-0914-00‡
3/4" FPT	1"	0063-14-1513-00
	1 1/4"	0063-15-1513-00
	2"	0063-17-1513-00
	2 1/2"	0063-18-1513-00
	3"	0063-19-1513-00
	3 1/2"	0063-20-1513-00‡
	4"	0063-21-1513-00
	5"	0063-23-1513-00‡
	6"	0063-24-1513-00
	8"	0063-26-1513-00‡

OUTLET	Main Size◊	PART NUMBER
1" FPT	1"	0063-14-1514-00
	1 1/4"	0063-15-1514-00
	2"	0063-17-1514-00
	2 1/2"	0063-18-1514-00
	3"	0063-19-1514-00
	3 1/2"	0063-20-1514-00‡
	4"	0063-21-1514-00
	5"	0063-23-1514-00‡
	6"	0063-24-1514-00
	8"	0063-26-1514-00‡
3/4" CTS (7/8" OD) COMPRESSION△	1"	0063-14-2506-00
	1 1/4"	0063-15-2506-00
	2"	0063-17-2506-00
	2 1/2"	0063-18-2506-00
	3"	0063-19-2506-00
	3 1/2"	0063-20-2506-00‡
	4"	0063-21-2506-00
	5"	0063-23-2506-00‡
	6"	0063-24-2506-00
	8"	0063-26-2506-00‡
1" CTS (1 1/8" OD) COMPRESSION△	1"	0063-14-2508-00
	1 1/4"	0063-15-2508-00
	2"	0063-17-2508-00
	2 1/2"	0063-18-2508-00
	3"	0063-19-2508-00
	3 1/2"	0063-20-2508-00‡
	4"	0063-21-2508-00
	5"	0063-23-2508-00‡
	6"	0063-24-2508-00
	8"	0063-26-2508-00‡
3/4" IPS COMPRESSION△	1"	0063-14-2513-00
	1 1/4"	0063-15-2513-00
	2"	0063-17-2513-00
	2 1/2"	0063-18-2513-00
	3"	0063-19-2513-00
	3 1/2"	0063-20-2513-00‡
	4"	0063-21-2513-00
	5"	0063-23-2513-00‡
	6"	0063-24-2513-00
	8"	0063-26-2513-00‡
1" IPS COMPRESSION△	1"	0063-14-2514-00
	1 1/4"	0063-15-2514-00
	2"	0063-17-2514-00
	2 1/2"	0063-18-2514-00
	3"	0063-19-2514-00
	3 1/2"	0063-20-2514-00‡
	4"	0063-21-2514-00
	5"	0063-23-2514-00‡
	6"	0063-24-2514-00
	8"	0063-26-2514-00‡

For sizes not listed, contact Continental Industries.
PVC Fastthred Saddles are rated at 200 psi.
◊ = Main sizes are for OD controlled pipe. Reference Tables 1, 2, 3, 4 & 5 on page 14.
△ = Compression fittings are for OD controlled tubing or pipe and are supplied without stiffeners. Reference Tables 1, 3 & 4 on page 14.
‡ = With stainless steel band strap.

PVC COMPRESSION FITTINGS

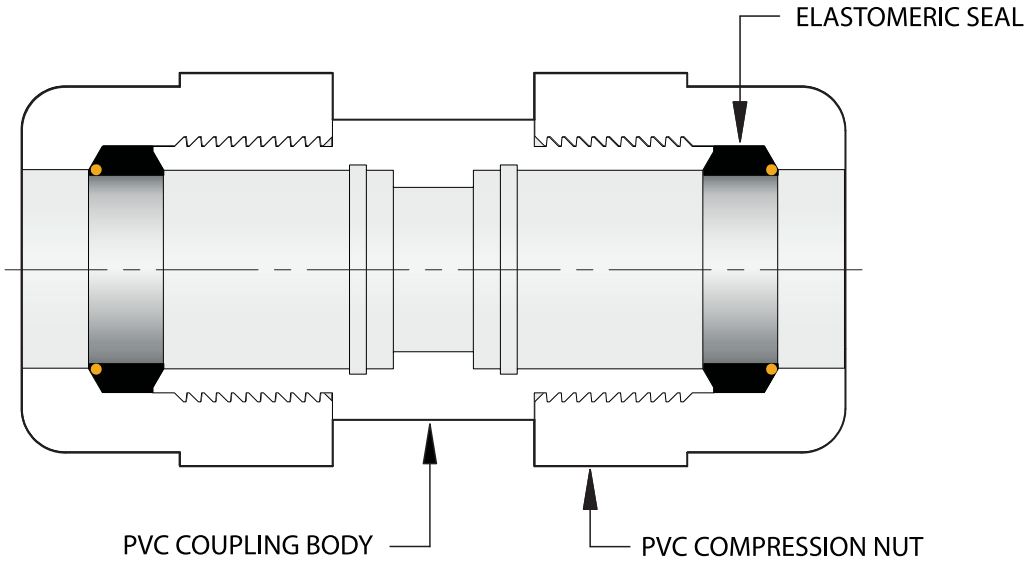

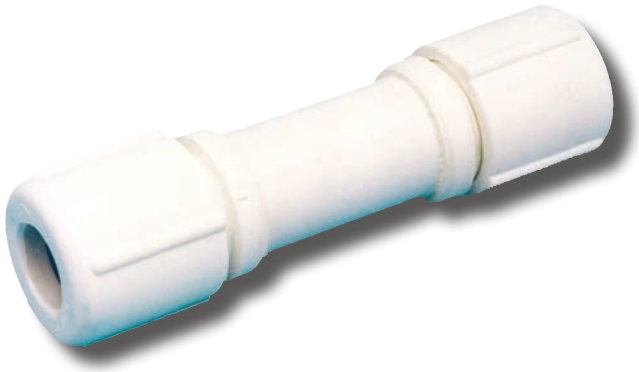

- QUICKLY AND EASILY INSTALLED—because it's pre-assembled. Just insert tubing and tighten compression nut.
- PVC COMPRESSION FITTINGS—can be used on a variety of plastic piping. Visual indicators make repeatable and successful installation a cinch. The installation is simple and the same procedure is used for 2406 or 3408 PE, PVC, PB and Copper Service Tubing.
- PERMANENT LEAK-PROOF JOINT
- ECONOMICAL AND EXTREMELY VERSATILE
- GASKET FULLY RETAINED TO PREVENT COLD FLOW

PVC COMPRESSION FITTINGS
Full Couplings

SIZE	PART NUMBER
3/4" CTS (7/8" OD)Δ	0649-52-2506-00
1" CTS (1 1/8" OD)Δ	0849-52-2508-00
3/4" IPSΔ	1349-52-2513-00
1" IPSΔ	1449-52-2514-00

For sizes not listed, contact Continental Industries.
PVC Water Compression fittings rated at 200 psi.
Δ = Compression fittings are for OD controlled tubing or pipe and are supplied without stiffeners. Reference Tables 1, 3 & 4 on page 14.

PVC COMPRESSION FITTINGS
End Caps

SIZE	PART NUMBER
3/4" CTS (7/8" OD)Δ	0649-53-2506-00
1" CTS (1 1/8" OD)Δ	0849-53-2508-00
3/4" IPSΔ	1349-53-2513-00
1" IPSΔ	1449-53-2514-00

For sizes not listed, contact Continental Industries.
PVC Water Compression fittings rated at 200 psi.
Δ = Compression fittings are for OD controlled tubing or pipe and are supplied without stiffeners. Reference Tables 1, 3 & 4 on page 14.

PVC COMPRESSION FITTINGS
Reducer Couplings

SIZE	SIZE	PART NUMBER
1" CTS (1 1/8" OD)Δ	3/4" IPSΔ	1349-54-2508-00
	3/4" CTS (7/8" OD)Δ	0849-54-2506-00
3/4" IPSΔ	3/4" CTS (7/8" OD)Δ	1349-54-2506-00
1" IPSΔ	1" CTS (1 1/8" OD)Δ	1449-54-2508-00
	3/4" IPSΔ	1449-54-2513-00
	3/4" CTS (7/8" OD)Δ	1449-54-2506-00

For sizes not listed, contact Continental Industries.
PVC Water Compression fittings rated at 200 psi.
Δ = Compression fittings are for OD controlled tubing or pipe and are supplied without stiffeners. Reference Tables 1, 3 & 4 on page 14.

PVC COMPRESSION FITTINGS
3-Way Tees

SIZE	PART NUMBER
3/4" CTS (7/8" OD)Δ	0649-50-2506-00
1" CTS (1 1/8" OD)Δ	0849-50-2508-00
3/4" IPSΔ	1349-50-2513-00
1" IPSΔ	1449-50-2514-00

For sizes not listed, contact Continental Industries.
PVC Water Compression fittings rated at 200 psi.
Δ = Compression fittings are for OD controlled tubing or pipe and are supplied without stiffeners. Reference Tables 1, 3 & 4 on page 14.

PVC COMPRESSION FITTINGS
90° Elbows

SIZE	PART NUMBER
3/4" CTS (7/8" OD)Δ	0649-51-2506-00
1" CTS (1 1/8" OD)Δ	0849-51-2508-00
3/4" IPSΔ	1349-51-2513-00
1" IPSΔ	1449-51-2514-00

For sizes not listed, contact Continental Industries.
PVC Water Compression fittings rated at 200 psi.
Δ = Compression fittings are for OD controlled tubing or pipe and are supplied without stiffeners. Reference Tables 1, 3 & 4 on page 14.

PVC COMPRESSION FITTINGS
Adapter Couplings

SIZE	SIZE	PART NUMBER
3/4" CTS (7/8" OD)Δ	3/4" IPS SOCKET	0649-48-0713-00
	1" IPS SOCKET	0649-48-0714-00
	3/4" MPT	0649-48-0913-00
	1" MPT	0649-48-0914-00
	3/4" FPT	0649-48-1513-00
1" CTS (1 1/8" OD)Δ	3/4" IPS SOCKET	0849-48-0713-00
	1" IPS SOCKET	0849-48-0714-00
	3/4" MPT	0849-48-0913-00
	1" MPT	0849-48-0914-00
	1" FPT	0849-48-1514-00
3/4" IPSΔ	3/4" IPS SOCKET	1349-48-0713-00
	1" IPS SOCKET	1349-48-0714-00
	3/4" MPT	1349-48-0913-00
	1" MPT	1349-48-0914-00
	3/4" FPT	1349-48-1513-00
1" IPSΔ	3/4" IPS SOCKET	1449-48-0713-00
	1" IPS SOCKET	1449-48-0714-00
	1" MPT	1449-48-0914-00
	1" FPT	1449-48-1514-00

For sizes not listed, contact Continental Industries.
PVC Water Compression fittings rated at 200 psi.
Δ = Compression fittings are for OD controlled tubing or pipe and are supplied without stiffeners. Reference Tables 1, 3 & 4 on page 14.

PIPE CHARTS

ASTM D2513 "Standard Specification for Thermoplastic Gas Pressure Pipe, Tubing and Fittings"					
NOMINAL SIZE	DR	OD		WALL	
		Average	Tolerance	Minimum	Tolerance
3/4" CTS (7/8" OD)	9.7	0.875	±.004	0.090	+0.009
1" CTS (1 1/8" OD)	12.5	1.125	±.005	0.090	+0.011
	11.5			0.099	+0.012
3/4" IPS	11	1.050	±.004	0.095	+0.011
1" IPS	11	1.315	±.005	0.119	+0.014
1 1/4" IPS	11	1.660	±.005	0.151	+0.018
	10			0.166	+0.020
2" IPS	11	2.375	±.006	0.216	+0.026
3" IPS	11.5	3.500	±.008	0.304	+0.036
	11			0.318	+0.038
4" IPS	11.5	4.500	±.009	0.391	+0.047
	11			0.409	+0.049
6" IPS	21	6.625	±.011	0.316	+0.038
	13.5			0.491	+0.059
	11.5			0.576	+0.069
	11			0.602	+0.072
8" IPS	11.5	8.625	±.013	0.750	+0.090
	11			0.785	+0.094

Table 1

AWWA C900 "PVC Pressure Pipe, 4" thru 12" for Water Distribution						
NOMINAL SIZE	PRESSURE CLASS @ 73.4° F	DR	OD		WALL	
in	psi		Average	Tolerance	Minimum	Tolerance
4	100	25	4.800	±0.009	0.192	+0.023
	150	18			0.267	+0.032
	200	14			0.343	+0.041
6	100	25	6.900	±0.011	0.276	+0.033
	150	18			0.383	+0.046
	200	14			0.493	+0.059
8	100	25	9.050	±0.015	0.362	+0.043
	150	18			0.503	+0.060
	200	14			0.646	+0.078
10	100	25	11.100	±0.015	0.444	+0.053
	150	18			0.617	+0.074
	200	14			0.793	+0.095

Table 2

AWWA C901 (PE 2406 & 3406) "Polyethylene Pressure Pipe & Tubing, 1/2" thru 3" for Water Service"						
NOMINAL SIZE	PRESSURE CLASS @ 73.4° F	DR	OD		WALL	
in	psi		Average	Tolerance	Minimum	Tolerance
1/2"	125	11	0.840	±0.004	0.076	+0.020
3/4"	125	11	1.050	±0.004	0.095	+0.021
1"	125	11	1.315	±0.005	0.119	+0.024
1 1/4"	125	11	1.660	±0.005	0.151	+0.026
1 1/2"	125	11	1.900	±0.006	0.173	+0.026
2"	80	17	2.375	±0.006	0.140	+0.020
	100	13.5			0.176	+0.021
	125	11			0.216	+0.026
3"	80	17	3.500	±0.008	0.206	+0.025
	100	13.5			0.259	+0.031
	125	11			0.318	+0.039

AWWA C901-88 (PE 3408) "Polyethylene Pressure Pipe & Tubing, 1/2" thru 3" for Water Service"						
NOMINAL SIZE	PRESSURE CLASS @ 73.4° F	DR	OD		WALL	
in	psi		Average	Tolerance	Minimum	Tolerance
1/2"	160	11	0.840	±0.004	0.076	+0.020
3/4"	125	13.5	1.050	±0.004	0.078	+0.020
	160	11			0.095	+0.021
1"	125	13.5	1.315	±0.005	0.097	+0.020
	160	11			0.119	+0.024
1 1/4"	125	13.5	1.660	±0.005	0.123	+0.020
	160	11			0.151	+0.026
1 1/2"	125	13.5	1.900	±0.006	0.141	+0.020
	160	11			0.173	+0.026
2"	80	21	2.375	±0.006	0.113	+0.020
	100	17			0.140	+0.020
	125	13.5			0.176	+0.021
	160	11			0.216	+0.026
3"	80	21	3.500	±0.008	0.167	+0.020
	100	17			0.206	+0.025
	125	13.5			0.259	+0.031
	160	11			0.318	+0.039

NOTE: AWWA C901 recommends the use of stiffeners for mechanical compression fitting outlets.

Table 3

AWWA C902 "Polybutylene Pressure Pipe & Tubing, 1/2" thru 3" for Water"						
NOMINAL SIZE	PRESSURE CLASS @ 73.4° F	DR	OD		WALL	
in	psi		Average	Tolerance	Minimum	Tolerance
1/2"	160	13.5	0.840	±0.004	0.062	+0.020
	200	11			0.076	+0.020
3/4"	125	17	1.050	±0.004	0.062	+0.020
	160	13.5			0.078	+0.020
	200	11			0.095	+0.021
1"	125	17	1.315	±0.005	0.077	+0.020
	160	13.5			0.097	+0.020
	200	11			0.119	+0.026
1 1/4"	125	17	1.660	±0.005	0.098	+0.020
	160	13.5			0.123	+0.020
	200	11			0.151	+0.026
1 1/2"	125	17	1.900	±0.006	0.112	+0.020
	160	13.5			0.141	+0.020
	200	11			0.173	+0.026
2"	125	17	2.375	±0.006	0.140	+0.020
	160	13.5			0.176	+0.021
	200	11			0.216	+0.026
2 1/2"	125	17	2.875	±0.007	0.169	+0.020
	160	13.5			0.213	+0.025
	200	11			0.261	+0.031
3"	125	17	3.500	±0.008	0.206	+0.025
	160	13.5			0.259	+0.031
	200	11			0.318	+0.039

Table 4

AWWA C906 "Polyethylene Pressure Pipe & Fittings, 4" thru 63" for Water Distribution"					
NOMINAL SIZE	PRESSURE CLASS @ 73.4° F	DR	OD		WALL
in	psi		Average	Tolerance	Minimum
4"	40	32.5	4.500	±0.020	0.138
	50	26			0.173
	63	21			0.214
	78	17			0.265
	100	13.5			0.333
	125	11			0.409
	156	9			0.500
	198	7.3			0.616
5"	40	32.5	5.563	±0.025	0.171
	50	26			0.214
	63	21			0.265
	78	17			0.327
	100	13.5			0.412
	125	11			0.506
	156	9			0.618
	198	7.3			0.762
6"	40	32.5	6.625	±0.030	0.204
	50	26			0.255
	63	21			0.316
	78	17			0.390
	100	13.5			0.491
	125	11			0.602
	156	9			0.736
8"	40	32.5	8.625	±0.039	0.265
	50	26			0.332
	63	21			0.411
	78	17			0.507
	100	13.5			0.639
	125	11			0.784
10"	40	32.5	10.750	±0.048	0.331
	50	26			0.413
	63	21			0.512
	78	17			0.632
	100	13.5			0.796
12"	40	32.5	12.750	±0.057	0.392
	50	26			0.490
	63	21			0.607
	78	17			0.750

Table 5

CONTINENTAL'S PVC WATER SADDLES

FACTS • FEATURES • BENEFITS

FASTTAP

- Full wrap around saddle design eliminates stress points being applied to main.
- Tapping process uses simple combination tapping tool eliminating cumbersome tapping machines.
- Tapping cutter retains the coupon then functions as a cut-off valve eliminating corporation stops.
- Manufactured from non-corrosive materials.
  - PVC with PPI HDB Listing
  - 316 Stainless Steel Bolts
  - Brass Cutter
- Available to work with 4"-10" AWWA C-900 and 1 1/4"-12" iron pipe size mains.
- Compression, solvent-weld and threaded outlets for 3/4" to 1" PVC, PE, PB and copper tubing.
- Application may be for wet or dry taps.
- See www.nsf.org for Continental's NSF Listing to Standard 61.
- Reduces time involved with installation by 50%!

FASTTHRED

- PVC saddles for IPS mains.
- Excellent for dry taps and irrigation systems.
- Available in 1 1/4" thru 8" iron pipe size mains.
- Compression, solvent-weld and threaded outlets for 3/4" to 1" PVC, PE, PB and copper tubing.

SUPER FASTTAP

- Full wrap around saddle design eliminates stress points being applied to main.
- Tapping process uses simple combination tapping tool eliminating cumbersome tapping machines.
- Tapping cutter retains the coupon then functions as a cut-off valve eliminating corporation stops.
- Manufactured from non-corrosive materials.
  - PVC with PPI HDB Listing
  - 316 Stainless Steel Bolts
- Available to work with 2"-6" iron pipe size mains.
- Compression and solvent-weld outlets to work with 1 1/4" and 2" PVC, PE, PB tubing.
- Application may be for wet or dry taps.
- See www.nsf.org for Continental's NSF Listing to Standard 61.
- Reduces time involved with installation by 50%!

Fasttap® Saddles are your Saddle, Tapping Machine and Corporation Stop, All in One Dependable and Economical Unit.

Continental Industries

Superior Quality **Superior Service** **Superior Selection**

1140 North 129th East Ave. Tulsa OK 74116
Phone: 918-627-5210
Fax: 918-6221275
www.conind.com

0000-99-3000-00 ECN 2446 REV "F" 06/18