DRAWING NO.
10011764

REV.	DATE	DESCRIPTION	ECO	BY	C'K'D.
A	7/11/02	DRAWING RELEASED	7771	DB	JM

CATALOG NUMBER	STRANDED COPPER CONDUCTOR ACCOMMODATED			BOLT SIZE	METRIC BOLT SIZE
	CODE (AWG)	NAVY	METRIC SIZE (CLASS 2)		
YA27–L4B	3/0 AWG	150	-----	3/8	M10

INSTALLATION TOOLING (# CRIMPS)

CATALOG NO.	COLOR CODE	DIE INFORMATION		MECHANICAL				HYDRAULIC					DIELESS (# CRIMPS)	WIRE STRIP LENGTH
		DIE INDEX	TYPE	OUR840	MD6 MD7	MD6--R2 BAT500	MD7–34R	BCT500 Y500CT	Y34A Y34B Y34BH ▷7	Y35, Y39 Y750, BAT35 BAT750, PAT750 ▷5	Y46 ▷4 ▷5	Y45 ▷3 ▷5		
YA27–L4B	ORANGE	14	ORANGE DIE SET	X27RT(3)	W27RT(2) W27VT(2)	W27RT(2) W27VT(2)	W27RT(2) W27VT(2)	X27RT(3) W27RT(2) W27VT(2)	-----	U27RT(1)	U27RT(1)	U27RT(1)	MECHANICAL: MY29–3(1) MY29–11(1) HYDRAULIC: Y644M(1) BAT644M(1)	1–1/8"
			NEST	-----	-----	-----	-----	-----	A27D(1) B27D(1)	U27D–1(1)	U27D–1(1)	U27D–1(1)		
			INDENTOR						Y34PR	Y34PR	Y34PR	Y34PR		

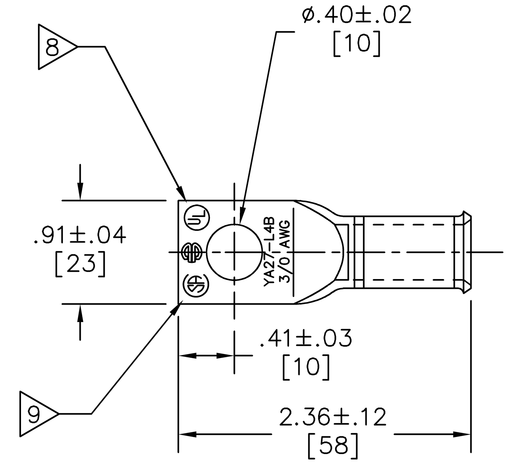

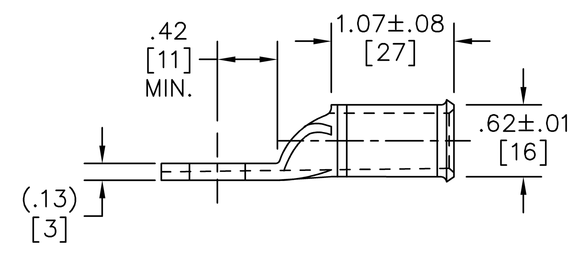

NOTES:

1. MATERIAL: COPPER TUBING.
2. FINISH: TIN PLATED.
3. ▷3 CATALOG # PT6515 ADAPTOR IS REQUIRED TO USE "U" DIES IN Y45 SERIES TOOLS.
4. ▷4 CATALOG # PUADP–1 ADAPTOR IS REQUIRED TO USE "U" DIES IN Y46 SERIES TOOLS.
5. ▷5 Y35P3 INDENTOR ADAPTOR REQUIRED FOR Y34PR INDENTOR.
6. DIMENSIONS IN BRACKETS [ ] ARE IN MILLIMETERS ROUNDED OFF TO THE NEAREST MILLIMETER, UNLESS OTHERWISE NOTED, AND ARE FOR REFERENCE ONLY.
7. ▷7 FOR USE BY CUSTOMERS THAT HAVE THIS HYPRESS™ NO NEW Y34A HYPRESS™ TOOLS A ARE BEING PROCESSED. Y34A USES A--D NEST DIES ONLY.
8. ▷8 CONNECTORS ARE UL LISTED.
9. ▷9 CONNECTORS ARE CSA CERTIFIED; UNDRILLED VERSIONS ARE NOT CSA CERTIFIED.
10. "X", "W–RT", "W–VT" & "U", DIE SETS ARE COLOR CODED. "A" & "B", DIES ARE NOT COLOR CODED. NESTS AND INDENTOR TYPE ARE NOT COLOR CODED.

TO ORDER BURNDY PRODUCTS CALL 1–800–346–4175
MANCHESTER, NH 03109, USA
FOR PRODUCT INFO = http://www.fciconnect.com

HYLUG™

ITEM NO: 518305

CAT NO: YA27–L4B

SCALE: NTS		
DRAWN BY: D.BOISVERT	7/11/02	
CHECKER: J.MICHAUD	7/12/02	
DSN APPVL: J.MICHAUD	7/12/02	
MFG APPVL: N/A	--	
QC APPVL: J.BRODEUR	7/12/02	
MKT APPVL: KEN WOO	7/17/02	
PROD FAM: --		
PROJECT #: --		
DOCUMENT TYPE: Sales		
REL LEVEL: AutoCAD		

FCI

DRAWING NO	REV
10011764	A
SIZE D	SHEET 1 OF 1