REV.	DATE	DESCRIPTION	ECO	BY	C'H'K.
C	05/21/2013 11:30:00 AM	UPDATE CATALOG NUMBERS ON DRAWINGS TO MATCH MFGPRO --	31554	MB	MA

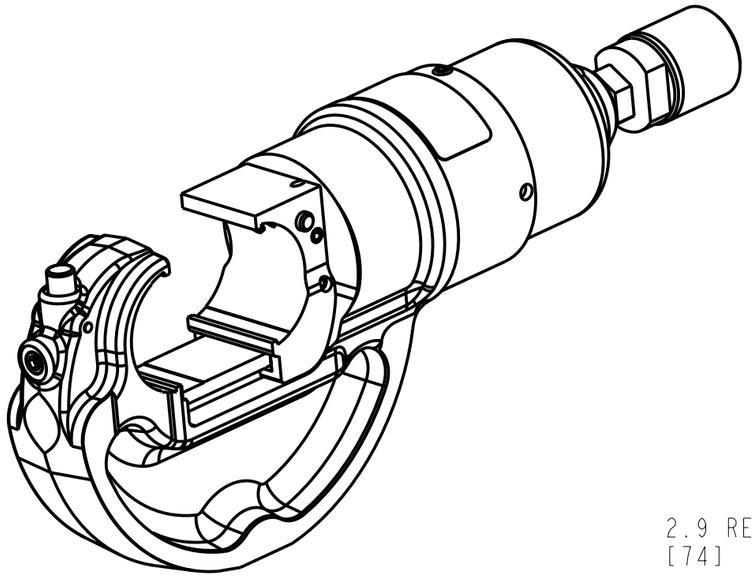

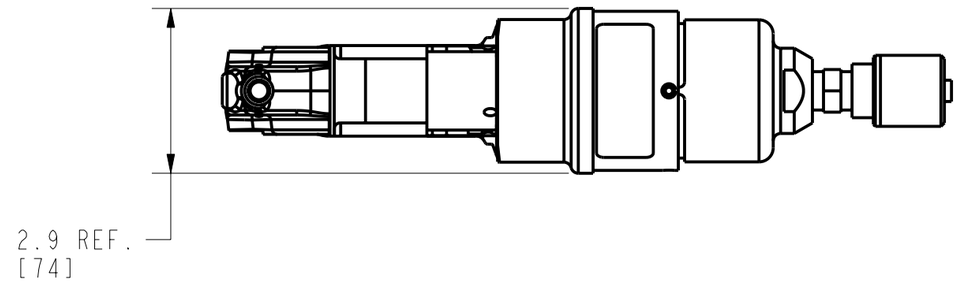

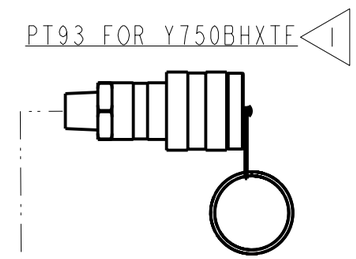

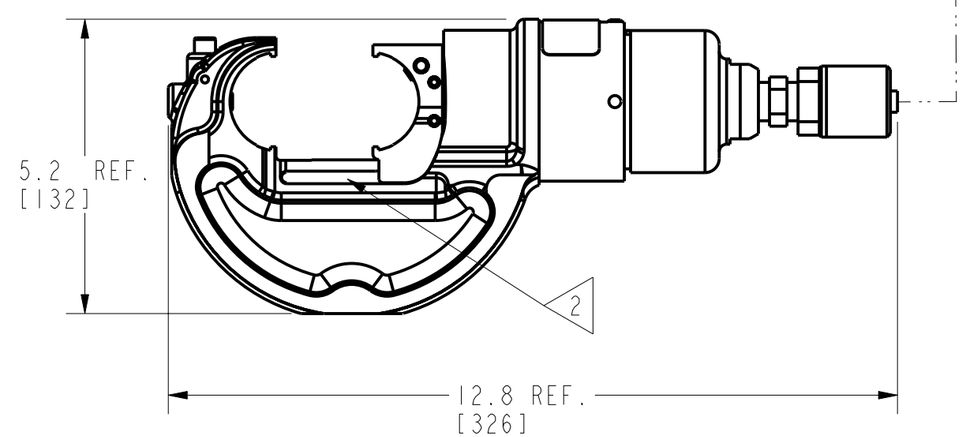

SPECIFICATIONS:

CONDUCTOR RANGES:
HYLUGS™ & SPLICES: #8 - 750 kcmil COPPER & ALUMINUM
#8 - 750 kcmil FLEX. STR. COPPER
H&C COPPER CRIMPIT TAPS: #14 - 500 kcmil COPPER & ALUMINUM
#14 - 500 kcmil FLEX. STR. COPPER
DEVELOPED FORCE: 24,000 LBS. (12 TONS)

OPERATING PREASURE: 10,000 PSI.

MAXIMUM DIE OPENING: 1.70 IN. / 43.2 MM

OVERALL LENGTH: 12.80 IN. / 325 MM

HEAD WIDTH: 5.20 IN. / 132 MM

HYDRAULIC FLUID: BURNDY ALFLUID™

WEIGHT: 10.8 LBS (APPROXIMATE)

FEATURES:

350° ROTATABLE HEAD

ACCEPTS ALL STANDARD "U" DIES

NOTES:

1. CATALOG NUMBER Y750BHXTF NOT SHOWN. UNIT IS SUPPLIED WITH FEMALE HYDRAULIC HOSE COUPLING.
2. CLEAN DIE TRACK PERIODICALLY TO MINIMIZE CONTAMINANT BUILD UP.
3. DIMENSIONS IN BRACKETS [ ] ARE IN MILLIMETERS ROUNDED OFF TO THE NEAREST MILLIMETER, UNLESS OTHERWISE NOTED AND ARE FOR REFERENCE ONLY.

TO ORDER BURNDY® PRODUCTS CALL

UNITED STATES:
1-800-346-4175 (LONDONDERRY, NH)

CANADA:
1-800-361-6975 (QUEBEC)
1-800-387-6487 (ALL OTHER PROVINCES)

FOR PRODUCT INFO: http://www.burndy.com

Y750BHXT, Y750CBHXT

ITEM NO: 10074298, 50017653, 10084419, 10084420

CAT. NO: Y750BHXT, Y750BHXTF, Y750CBHXT, Y750CBHXTF

DRAWN BY:	T. FAUCHER	05/15/2008
CHECKER:	M. CHIASSON	05/15/2008
DSN APPVL:	M. CHIASSON	05/15/2008
MFG APPVL:	S. GONYAW	05/15/2008
QA APPVL:	J. AYER	05/20/2008
MKT APPVL:	--	--

BURNDY

SCALE: 3:8

PROD FAM: TOOLS, HYDRAULIC		DRAWING NO	REV
PROJECT #: 13350	SIZE	10088816	C
DOCUMENT TYPE: Sales	B		
REL LEVEL: Released		SHEET 1 OF 1	

REV: PE0200