DRAWING NO. 10101349

REV	DATE	DESCRIPTION	ECO	BY	C'H'K.
E	2022-09-02 00:00:00 EDT	DRAWING UPDATE AS PER MARKUP	220831023584	YR	RA

WIRE RANGE				CATALOG NUMBER	CONNECTOR				WIRE STRIP LENGTH		DIMENSIONS TOLERANCES ± .07°		
BARREL A		BARREL B		CLEAR HEAT SHRINK BURNDY® TELECOM KIT STANDARD BARREL	COLOR CODE		DIE INDEX						
AWG	MM^2	AWG	MM^2		BARREL A	BARREL B	BARREL A	BARREL B	BARREL A	BARREL B	BARREL A	BARREL B	L
#8 AWG CLASS B,C,D,G,H,I,K,M	--	#8 AWG CLASS B,C,D,G,H,I,K,M	--	YS8CFXLTCKITC	RED	RED	49	49	0.62	0.62	0.65	0.65	1.48

INSTALLATION TOOLING (STANDARD BARREL)

CATALOG NUMBER	INSTALLATION TOOLING (# CRIMPS)		INSTALLATION TOOLING (# CRIMPS)		INSTALLATION TOOLING (# CRIMPS)		INSTALLATION TOOLING (# CRIMPS)	
CLEAR HEAT SHRINK BURNDY® TELECOM KIT STANDARD BARREL	HYDRAULIC		HYDRAULIC		MECHANICAL		DIELESS	
	Y750, Y35, Y39, Y46, PAT46 & PAT750		PAT60018V, Y500CTHS		OUR840, MD7-34R		Y8MRB-1, Y1MRTC, MY29-3, MY29-11	
	BARREL A	BARREL B	BARREL A	BARREL B	BARREL A	BARREL B	BARREL A	BARREL B
YS8CFXLTCKITC	U8CRT (1)	U8CRT (1)	W8CVT(1) / W8CRT(1) / X8CRT(1)	W8CVT(1) / W8CRT(1) / X8CRT(1)	W8CVT(1) / W8CRT(1) / X8CRT(1)	W8CVT(1) / W8CRT(1) / X8CRT(1)	Y8MRB-1(1) / Y1MRTC(1) / MY29-3(1) / MY29-11(1)	Y8MRB-1(1) / Y1MRTC(1) / MY29-3(1) / MY29-11(1)

NOTE: THAT THERE ARE A VARIETY OF BURNDY® INSTALLATION TOOLS AVAILABLE, AND NOT ALL ARE LISTED. IF YOU HAVE QUESTIONS REGARDING TOOLING, PLEASE CONTACT OUR "CUSTOMER SERVICE DEPARTMENT" AT 1-800-346-4175.

KIT		
ITEM	DESCRIPTION	QTY.
A	ELECTRO-TIN PLATED COPPER COMPRESSION CONNECTOR (SEE NOTE 1)	1
B	HEAT SHRINK TUBING (SEE NOTE2)	1
C	MULTILINGUAL INSTALLATION INSTRUCTION SHEET (SEE NOTE3)	1
D	PLASTIC BAG WITH LABELING AND PRODUCT IDENTIFIER	1

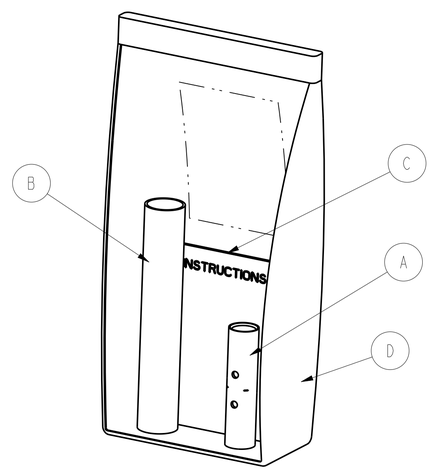

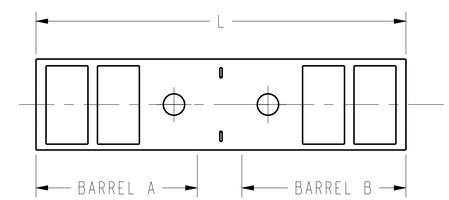

NOTES:

1. ELECTRO-TIN PLATED COPPER COMPRESSSION REDUCER/SPLICE; WITH A THROUGH HOLE FOR CABLE INSPECTION ON EACH SIDE; COLOR CODE, WIRE STRIP LENGTH AND CRIMP PLACEMENT INDICATIONS ARE INCLUDED. STANDARD BARRELS LISTED UL 486A.
2. HEAT SHRINK TUBING:
   CLEAR - POLYVINYL CHLORIDE - LISTED UL 224, VW-1 RATING. (VERTICAL WIRE FLAME TEST)
   - PASSES TELCORDIA GR-347-CORE "ABRASION TEST".
3. EACH KIT IS PACKED IN A SEALED PLASTIC BAG INCLUDING THE INSTALLATION INSTRUCTIONS IN ENGLISH, FRENCH AND SPANISH.
4. SEE TABLE FOR SPECIFIC KIT CATALOG NUMBER.
5. FOR SPECIFIC APPLICATION TOOLS AND DIES, SEE ABOVE TOOLING TABLE.

TO ORDER BURNDY® PRODUCTS CALL

UNITED STATES:
1-800-346-4175 (LONDONDERRY, NH)

CANADA:
1-800-361-6975 (QUEBEC)
1-800-387-6487 (ALL OTHER PROVINCES)

FOR PRODUCT INFO: http://www.burndy.com

COMPRESSION COPPER REDUCER / SPLICE KIT

ITEM NO: --		
CAT. NO: (SEE TABLE)		
DRAWN BY: B.SURESH BABU	6/13/09	
CHECKER: J.MICHAUD	11/24/09	
DSN APPVL: J.MICHAUD	11/24/09	
MFG APPVL: --	--	
QA APPVL: J.BRODEUR	11/25/09	
MKT APPVL: J.SYLVIA	11/23/09	SCALE: 1:1
PROD FAM: CM&R COMPRESSION		DRAWING NO / REV
PROJECT #: --	SIZE	10101349 / E
DOCUMENT TYPE: Sales	D	
REL LEVEL: Released		SHEET 1 OF 13

REV: CREO 08/10/21

DRAWING NO. 10101349

REV	DATE	DESCRIPTION	ECO	BY	C'H'K.
E	2022-09-02 00:00:00 EDT	DRAWING UPDATE AS PER MARKUP	220831023584	YR	RA

WIRE RANGE				CATALOG NUMBER	CONNECTOR				WIRE STRIP LENGTH		DIMENSIONS TOLERANCES ± .07°		
BARREL A		BARREL B		CLEAR HEAT SHRINK BURNDY® TELECOM KIT STANDARD BARREL	COLOR CODE		DIE INDEX						
AWG	MM²	AWG	MM²		BARREL A	BARREL B	BARREL A	BARREL B	BARREL A	BARREL B	BARREL A	BARREL B	L
#6 AWG CLASS B,C,D,G,H,I,K,M	16 mm² CLASS 5	#6 AWG CLASS B,C,D,G,H,I,K,M	16 mm² CLASS 5	YS6CFXLTCKITC	BLUE	BLUE	7 OR 24	7 OR 24	0.70	0.70	0.73	0.73	1.60
#6 AWG CLASS B,C	16 mm² CLASS 2	#6 AWG CLASS B,C	16 mm² CLASS 5	YS6CLTCKITC	BLUE	BLUE	7 OR 24	7 OR 24	0.70	0.70	0.73	0.73	1.50

INSTALLATION TOOLING (STANDARD BARREL)

CATALOG NUMBER	INSTALLATION TOOLING (# CRIMPS)		INSTALLATION TOOLING (# CRIMPS)		INSTALLATION TOOLING (# CRIMPS)		INSTALLATION TOOLING (# CRIMPS)	
CLEAR HEAT SHRINK BURNDY® TELECOM KIT STANDARD BARREL	HYDRAULIC		HYDRAULIC		MECHANICAL		DIELESS	
	Y750, Y35, Y39, Y46, PAT46 & PAT750		PAT60018V, Y500CTHS		OUR840, MD7-34R		Y644HSXT, Y644MBH, MY29-11, PAT644XT18V- SERIES, YIMRTC	
	BARREL A	BARREL B	BARREL A	BARREL B	BARREL A	BARREL B	BARREL A	BARREL B
YS6CFXLTCKITC	U5CRT (1)	U5CRT (1)	W5CVT(1) / W5CRT(1) / X5CRT(1)	W5CVT(1) / W5CRT(1) / X5CRT(1)	W5CVT(1) / W5CRT(1) / X5CRT(1)	W5CVT(1) / W5CRT(1) / X5CRT(1)	YIMRTC(1) / MY29-11(1) / Y644M-(1) / PAT644M-(1)	YIMRTC(1) / MY29-11(1) / Y644M-(1) / PAT644M-(1)
YS6CLTCKITC	U5CRT (1)	U5CRT (1)	W5CVT(1) / W5CRT(1) / X5CRT(1)	W5CVT(1) / W5CRT(1) / X5CRT(1)	W5CVT(1) / W5CRT(1) / X5CRT(1)	W5CVT(1) / W5CRT(1) / X5CRT(1)	YIMRTC(1) / MY29-11(1) / Y644M-(1) / PAT644M-(1)	YIMRTC(1) / MY29-11(1) / Y644M-(1) / PAT644M-(1)

NOTE: THAT THERE ARE A VARIETY OF BURNDY® INSTALLATION TOOLS AVAILABLE, AND NOT ALL ARE LISTED. IF YOU HAVE QUESTIONS REGARDING TOOLING, PLEASE CONTACT OUR "CUSTOMER SERVICE DEPARTMENT" AT 1-800-346-4175.

KIT		
ITEM	DESCRIPTION	QTY.
A	ELECTRO-TIN PLATED COPPER COMPRESSION CONNECTOR (SEE NOTE 1)	1
B	HEAT SHRINK TUBING (SEE NOTE2)	1
C	MULTILINGUAL INSTALLATION INSTRUCTION SHEET (SEE NOTE3)	1
D	PLASTIC BAG WITH LABELING AND PRODUCT IDENTIFIER	1

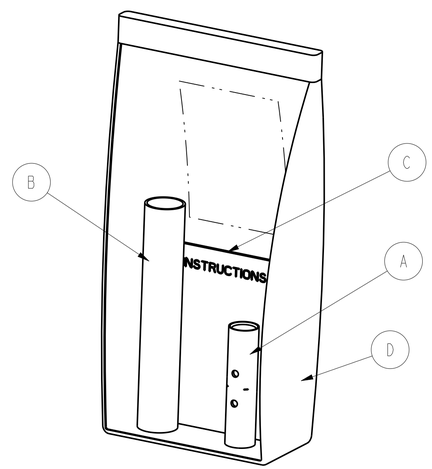

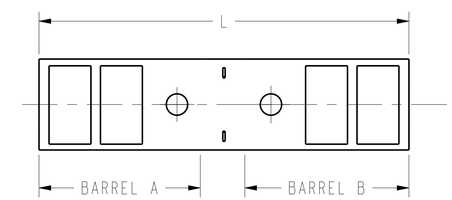

NOTES:

1. ELECTRO-TIN PLATED COPPER COMPRESSSION REDUCER/SPLICE; WITH A THROUGH HOLE FOR CABLE INSPECTION ON EACH SIDE; COLOR CODE, WIRE STRIP LENGTH AND CRIMP PLACEMENT INDICATIONS ARE INCLUDED. STANDARD BARRELS LISTED UL 486A.
2. HEAT SHRINK TUBING:
   CLEAR - POLYVINYL CHLORIDE - LISTED UL 224, VW-1 RATING. (VERTICAL WIRE FLAME TEST)
   - PASSES TELCORDIA GR-347-CORE "ABRASION TEST".
3. EACH KIT IS PACKED IN A SEALED PLASTIC BAG INCLUDING THE INSTALLATION INSTRUCTIONS IN ENGLISH, FRENCH AND SPANISH.
4. SEE TABLE FOR SPECIFIC KIT CATALOG NUMBER.
5. FOR SPECIFIC APPLICATION TOOLS AND DIES, SEE ABOVE TOOLING TABLE.

TO ORDER BURNDY® PRODUCTS CALL

UNITED STATES:
1-800-346-4175 (LONDONDERRY, NH)

CANADA:
1-800-361-6975 (QUEBEC)
1-800-387-6487 (ALL OTHER PROVINCES)

FOR PRODUCT INFO: http://www.burndy.com

COMPRESSION COPPER REDUCER / SPLICE KIT

ITEM NO: --		
CAT. NO: (SEE TABLE)		
DRAWN BY: B.SURESH BABU 6/13/09		
CHECKER: J.MICHAUD 11/24/09		
DSN APPVL: J.MICHAUD 11/24/09		
MFG APPVL: -- --		
QA APPVL: J.BRODEUR 11/25/09		
MKT APPVL: J.SYLVIA 11/23/09		SCALE: 1:1
PROD FAM: CM&R COMPRESSION	DRAWING NO	REV
PROJECT #: -- / DOCUMENT TYPE: Sales / REL LEVEL: Released	SIZE D	10101349 / SHEET 2 OF 13	E

REV: CREO 08/10/21

DRAWING NO. 10101349

REV	DATE	DESCRIPTION	ECO	BY	C'H'K.
E	2022-09-02 00:00:00 EDT	DRAWING UPDATE AS PER MARKUP	220831023584	YR	RA

WIRE RANGE				CATALOG NUMBER	CONNECTOR				WIRE STRIP LENGTH		DIMENSIONS TOLERANCES ± .07°		
BARREL A		BARREL B		CLEAR HEAT SHRINK BURNDY® TELECOM KIT STANDARD BARREL	COLOR CODE		DIE INDEX						
AWG	MM^2	AWG	MM^2		BARREL A	BARREL B	BARREL A	BARREL B	BARREL A	BARREL B	BARREL A	BARREL B	L
#4 AWG CLASS B,C,D,G,H,I,K,M	--	#4 AWG CLASS B,C,D,G,H,I,K,M	--	YS4CFXLTCKITC	GRAY	GRAY	8	8	0.71	0.71	0.74	0.74	1.69

INSTALLATION TOOLING (STANDARD BARREL)

CATALOG NUMBER	INSTALLATION TOOLING (# CRIMPS)		INSTALLATION TOOLING (# CRIMPS)		INSTALLATION TOOLING (# CRIMPS)		INSTALLATION TOOLING (# CRIMPS)	
CLEAR HEAT SHRINK BURNDY® TELECOM KIT STANDARD BARREL	HYDRAULIC		HYDRAULIC		MECHANICAL		DIELESS	
	Y750, Y35, Y39, Y46, PAT46 & PAT750		PAT60018V, Y500CTHS		OUR840, MD7-34R		Y644HSXT, Y644MBH, MY29-11, PAT644XT18V- SERIES, Y1MRTC	
	BARREL A	BARREL B	BARREL A	BARREL B	BARREL A	BARREL B	BARREL A	BARREL B
YS4CFXLTCKITC	U4CRT (1)	U4CRT (1)	W4CVT(1) / W4CRT(1) / X4CRT(1)	W4CVT(1) / W4CRT(1) / X4CRT(1)	W4CVT(1) / W4CRT(1) / X4CRT(1)	W4CVT(1) / W4CRT(1) / X4CRT(1)	Y1MRTC(1) / MY29-11(1) / Y644M-(1) / PAT644M-(1)	Y1MRTC(1) / MY29-11(1) / Y644M-(1) / PAT644M-(1)

NOTE: THAT THERE ARE A VARIETY OF BURNDY® INSTALLATION TOOLS AVAILABLE, AND NOT ALL ARE LISTED. IF YOU HAVE QUESTIONS REGARDING TOOLING, PLEASE CONTACT OUR "CUSTOMER SERVICE DEPARTMENT" AT 1-800-346-4175.

KIT		
ITEM	DESCRIPTION	QTY.
A	ELECTRO-TIN PLATED COPPER COMPRESSION CONNECTOR (SEE NOTE 1)	1
B	HEAT SHRINK TUBING (SEE NOTE2)	1
C	MULTILINGUAL INSTALLATION INSTRUCTION SHEET (SEE NOTE3)	1
D	PLASTIC BAG WITH LABELING AND PRODUCT IDENTIFIER	1

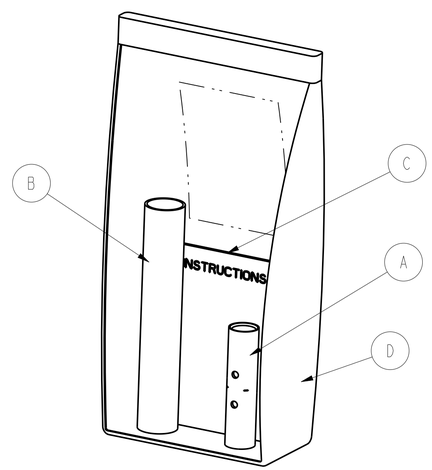

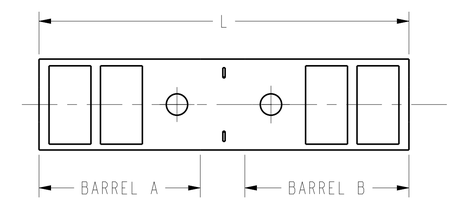

NOTES:

1. ELECTRO-TIN PLATED COPPER COMPRESSSION REDUCER/SPLICE; WITH A THROUGH HOLE FOR CABLE INSPECTION ON EACH SIDE; COLOR CODE, WIRE STRIP LENGTH AND CRIMP PLACEMENT INDICATIONS ARE INCLUDED. STANDARD BARRELS LISTED UL 486A.
2. HEAT SHRINK TUBING:
   CLEAR - POLYVINYL CHLORIDE - LISTED UL 224, VW-1 RATING. (VERTICAL WIRE FLAME TEST)
   - PASSES TELCORDIA GR-347-CORE "ABRASION TEST".
3. EACH KIT IS PACKED IN A SEALED PLASTIC BAG INCLUDING THE INSTALLATION INSTRUCTIONS IN ENGLISH, FRENCH AND SPANISH.
4. SEE TABLE FOR SPECIFIC KIT CATALOG NUMBER.
5. FOR SPECIFIC APPLICATION TOOLS AND DIES, SEE ABOVE TOOLING TABLE.

TO ORDER BURNDY® PRODUCTS CALL

UNITED STATES:
1-800-346-4175 (LONDONDERRY, NH)

CANADA:
1-800-361-6975 (QUEBEC)
1-800-387-6487 (ALL OTHER PROVINCES)

FOR PRODUCT INFO: http://www.burndy.com

COMPRESSION COPPER REDUCER / SPLICE KIT

ITEM NO: --			
CAT. NO: (SEE TABLE)			
DRAWN BY: B.SURESH BABU 6/13/09			
CHECKER: J.MICHAUD 11/24/09			
DSN APPVL: J.MICHAUD 11/24/09			
MFG APPVL: -- --			
QA APPVL: J.BRODEUR 11/25/09			
MKT APPVL: J.SYLVIA 11/23/09		SCALE: 1:1	
PROD FAM: CM&R COMPRESSION		DRAWING NO	REV
PROJECT #: --	SIZE	10101349	E
DOCUMENT TYPE: Sales	D		
REL LEVEL: Released		SHEET 3 OF 13	

REV: CREO 08/10/21

DRAWING NO. 10101349

REV	DATE	DESCRIPTION	ECO	BY	C'H'K.
E	2022-09-02 00:00:00 EDT	DRAWING UPDATE AS PER MARKUP	220831023584	YR	RA

WIRE RANGE				CATALOG NUMBER	CONNECTOR				WIRE STRIP LENGTH		DIMENSIONS TOLERANCES ± .07°		
BARREL A		BARREL B		CLEAR HEAT SHRINK BURNDY® TELECOM KIT STANDARD BARREL	COLOR CODE		DIE INDEX						
AWG	MM²	AWG	MM²		BARREL A	BARREL B	BARREL A	BARREL B	BARREL A	BARREL B	BARREL A	BARREL B	L
#2 AWG CLASS B,C	35 mm² CLASS 2	#2 AWG CLASS B,C	35 mm² CLASS 2	YS2CLTCKITC	BROWN	BROWN	10	10	0.78	0.78	0.78	0.78	1.88
#2 AWG CLASS B,C,D,G,H,I,K,M	35 mm² CLASS 5	#2 AWG CLASS B,C,D,G,H,I,K,M	35 mm² CLASS 5	YS2CFXLTCKITC	BROWN	BROWN	10	10	0.78	0.78	0.78	0.78	1.88

INSTALLATION TOOLING (STANDARD BARREL)

CATALOG NUMBER	INSTALLATION TOOLING (# CRIMPS)		INSTALLATION TOOLING (# CRIMPS)		INSTALLATION TOOLING (# CRIMPS)		INSTALLATION TOOLING (# CRIMPS)	
CLEAR HEAT SHRINK BURNDY® TELECOM KIT STANDARD BARREL	HYDRAULIC		HYDRAULIC		MECHANICAL		DIELESS	
	Y750, Y35, Y39, Y46, PAT46 & PAT750		PAT60018V, Y500CTHS		OUR840, MD7-34R		Y644HSXT, Y644MBH, MY29-11, PAT644XT18V- SERIES, MRC840	
	BARREL A	BARREL B	BARREL A	BARREL B	BARREL A	BARREL B	BARREL A	BARREL B
YS2CLTCKITC	U2CRT (1)	U2CRT (1)	W2CVT(1) / W2CRT(1) / X2CRT(1)	W2CVT(1) / W2CRT(1) / X2CRT(1)	W2CVT(1) / W2CRT(1) / X2CRT(1)	W2CVT(1) / W2CRT(1) / X2CRT(1)	YIMRTC (1) / MY29-11(1) / Y644-(1) / PAT644-(1)	YIMRTC (1) / MY29-11(1) / Y644-(1) / PAT644-(1)
YS2CFXLTCKITC	U2CRT (1)	U2CRT (1)	W2CVT(1) / W2CRT(1) / X2CRT(1)	W2CVT(1) / W2CRT(1) / X2CRT(1)	W2CVT(1) / W2CRT(1) / X2CRT(1)	W2CVT(1) / W2CRT(1) / X2CRT(1)	YIMRTC (1) / MY29-11(1) / Y644-(1)/ PAT644-(1)	YIMRTC (1) / MY29-11(1) / Y644-(1) / PAT644-(1)

NOTE: THAT THERE ARE A VARIETY OF BURNDY® INSTALLATION TOOLS AVAILABLE, AND NOT ALL ARE LISTED. IF YOU HAVE QUESTIONS REGARDING TOOLING, PLEASE CONTACT OUR "CUSTOMER SERVICE DEPARTMENT" AT 1-800-346-4175.

KIT		
ITEM	DESCRIPTION	QTY.
A	ELECTRO-TIN PLATED COPPER COMPRESSION CONNECTOR (SEE NOTE 1)	1
B	HEAT SHRINK TUBING (SEE NOTE2)	1
C	MULTILINGUAL INSTALLATION INSTRUCTION SHEET (SEE NOTE3)	1
D	PLASTIC BAG WITH LABELING AND PRODUCT IDENTIFIER	1

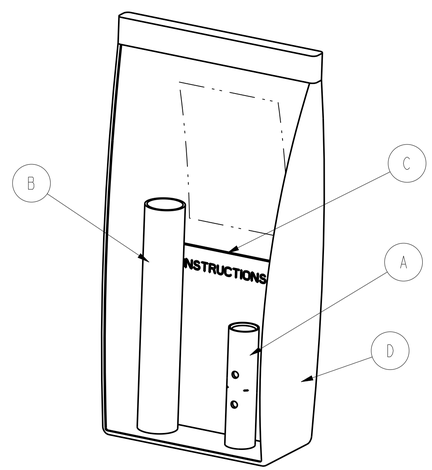

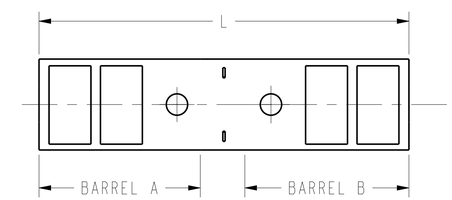

NOTES:

1. ELECTRO-TIN PLATED COPPER COMPRESSSION REDUCER/SPLICE; WITH A THROUGH HOLE FOR CABLE INSPECTION ON EACH SIDE; COLOR CODE, WIRE STRIP LENGTH AND CRIMP PLACEMENT INDICATIONS ARE INCLUDED. STANDARD BARRELS LISTED UL 486A.
2. HEAT SHRINK TUBING:
   CLEAR - POLYVINYL CHLORIDE - LISTED UL 224, VW-1 RATING. (VERTICAL WIRE FLAME TEST)
   - PASSES TELCORDIA GR-347-CORE "ABRASION TEST".
3. EACH KIT IS PACKED IN A SEALED PLASTIC BAG INCLUDING THE INSTALLATION INSTRUCTIONS IN ENGLISH, FRENCH AND SPANISH.
4. SEE TABLE FOR SPECIFIC KIT CATALOG NUMBER.
5. FOR SPECIFIC APPLICATION TOOLS AND DIES, SEE ABOVE TOOLING TABLE.

TO ORDER BURNDY® PRODUCTS CALL

UNITED STATES:
1-800-346-4175 (LONDONDERRY, NH)

CANADA:
1-800-361-6975 (QUEBEC)
1-800-387-6487 (ALL OTHER PROVINCES)

FOR PRODUCT INFO: http://www.burndy.com

COMPRESSION COPPER REDUCER / SPLICE KIT

ITEM NO: --		
CAT. NO: (SEE TABLE)		
DRAWN BY: B.SURESH BABU	6/13/09	
CHECKER: J.MICHAUD	11/24/09	
DSN APPVL: J.MICHAUD	11/24/09	
MFG APPVL: --	--	
QA APPVL: J.BRODEUR	11/25/09	
MKT APPVL: J.SYLVIA	11/23/09	SCALE: 1:2
PROD FAM: CM&R COMPRESSION		DRAWING NO / REV
PROJECT #: --	SIZE	10101349 / E
DOCUMENT TYPE: Sales	D	
REL LEVEL: Released		SHEET 4 OF 13

REV: CREO 08/10/21

DRAWING NO. 10101349

REV	DATE	DESCRIPTION	ECO	BY	C'H'K.
E	2022-09-02 00:00:00 EDT	DRAWING UPDATE AS PER MARKUP	220831023584	YR	RA

WIRE RANGE				CATALOG NUMBER	CONNECTOR				WIRE STRIP LENGTH		DIMENSIONS TOLERANCES ± .07°		
BARREL A		BARREL B		CLEAR HEAT SHRINK BURNDY® TELECOM KIT STANDARD BARREL	COLOR CODE		DIE INDEX						
AWG	MM^2	AWG	MM^2		BARREL A	BARREL B	BARREL A	BARREL B	BARREL A	BARREL B	BARREL A	BARREL B	L
1/0 AWG CLASS B,C	~ ~ ~	1/0 AWG CLASS B,C	~ ~ ~	YS25LTCK1TC	PINK	PINK	12	12	1.00	1.00	1.00	1.00	2.37
1/0 AWG CLASS B,C,D,G,H,I,K,M	50 mm² CLASS 5	1/0 AWG CLASS B,C,D,G,H,I,K,M	50 mm² CLASS 5	YS25FXLTCK1TC	PINK	PINK	12	12	1.00	1.00	1.00	1.00	2.37

INSTALLATION TOOLING (STANDARD BARREL)

CATALOG NUMBER	INSTALLATION TOOLING (# CRIMPS)		INSTALLATION TOOLING (# CRIMPS)		INSTALLATION TOOLING (# CRIMPS)		INSTALLATION TOOLING (# CRIMPS)	
CLEAR HEAT SHRINK BURNDY® TELECOM KIT STANDARD BARREL	HYDRAULIC		HYDRAULIC		MECHANICAL		DIELESS	
	Y750, Y35, Y39, Y46, PAT46 & PAT750		PAT6001 8V, Y500CTHS		OUR840, MD7-34R		Y644HSXT, Y644MBH, MY29-11, PAT644XT18V- SERIES, MRC840	
	BARREL A	BARREL B	BARREL A	BARREL B	BARREL A	BARREL B	BARREL A	BARREL B
YS25LTCK1TC	U25RT (1)	U25RT (1)	W25VT(2) / W25RT(2) / X25RT(2)	W25VT(2) / W25RT(2) / X25RT(2)	W25VT(2) / W25RT(2) / X25RT(2)	W25VT(2) / W25RT(2) / X25RT(2)	MY29-11(1) / MRC840(2) / Y644-(1) / PAT644-(1)	MY29-11(1) / MRC840(2) / Y644-(1) / PAT644-(1)
YS25FXLTCK1TC	U25RT (1)	U25RT (1)	W25VT(2) / W25RT(2) / X25RT(2)	W25VT(2) / W25RT(2) / X25RT(2)	W25VT(2) / W25RT(2) / X25RT(2)	W25VT(2) / W25RT(2) / X25RT(2)	MY29-11(1) / Y644-(1) / PAT644-(1)	MY29-11(1) / Y644-(1) / PAT644-(1)

NOTE: THAT THERE ARE A VARIETY OF BURNDY® INSTALLATION TOOLS AVAILABLE, AND NOT ALL ARE LISTED. IF YOU HAVE QUESTIONS REGARDING TOOLING, PLEASE CONTACT OUR "CUSTOMER SERVICE DEPARTMENT" AT 1-800-346-4175.

KIT		
ITEM	DESCRIPTION	QTY.
A	ELECTRO-TIN PLATED COPPER COMPRESSION CONNECTOR (SEE NOTE 1)	1
B	HEAT SHRINK TUBING (SEE NOTE2)	1
C	MULTILINGUAL INSTALLATION INSTRUCTION SHEET (SEE NOTE3)	1
D	PLASTIC BAG WITH LABELING AND PRODUCT IDENTIFIER	1

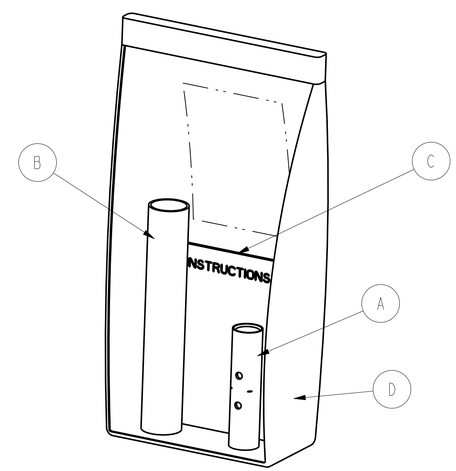

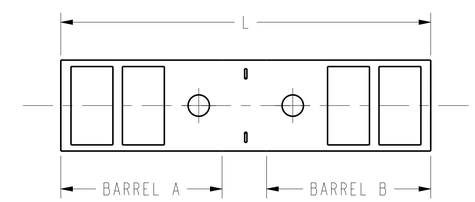

NOTES:

1. ELECTRO-TIN PLATED COPPER COMPRESSSION REDUCER/SPLICE; WITH A THROUGH HOLE FOR CABLE INSPECTION ON EACH SIDE; COLOR CODE, WIRE STRIP LENGTH AND CRIMP PLACEMENT INDICATIONS ARE INCLUDED. STANDARD BARRELS LISTED UL 486A.
2. HEAT SHRINK TUBING:
   CLEAR - POLYVINYL CHLORIDE - LISTED UL 224, VW-1 RATING. (VERTICAL WIRE FLAME TEST)
   - PASSES TELCORDIA GR-347-CORE "ABRASION TEST".
3. EACH KIT IS PACKED IN A SEALED PLASTIC BAG INCLUDING THE INSTALLATION INSTRUCTIONS IN ENGLISH, FRENCH AND SPANISH.
4. SEE TABLE FOR SPECIFIC KIT CATALOG NUMBER.
5. FOR SPECIFIC APPLICATION TOOLS AND DIES, SEE ABOVE TOOLING TABLE.

TO ORDER BURNDY® PRODUCTS CALL
UNITED STATES:
1-800-346-4175 (LONDONDERRY, NH)
CANADA:
1-800-361-6975 (QUEBEC)
1-800-387-6487 (ALL OTHER PROVINCES)
FOR PRODUCT INFO: http://www.burndy.com

COMPRESSION COPPER REDUCER / SPLICE KIT

ITEM NO: --		
CAT. NO: (SEE TABLE)		
DRAWN BY: B.SURESH BABU	6/13/09	
CHECKER: J.MICHAUD	11/24/09	
DSN APPVL: J.MICHAUD	11/24/09	
MFG APPVL: --	--	
QA APPVL: J.BRODEUR	11/25/09	
MKT APPVL: J.SYLVIA	11/23/09	SCALE: 1:2
PROD FAM: CM&R COMPRESSION	DRAWING NO	REV
PROJECT #: -- / SIZE	10101349	E
DOCUMENT TYPE: Sales / D		
REL LEVEL: Released	SHEET 5 OF 13	

REV: CREQ 08/10/21

DRAWING NO. 10101349

REV	DATE	DESCRIPTION	ECO	BY	C'H'K.
E	2022-09-02 00:00:00 EDT	DRAWING UPDATE AS PER MARKUP	220831023584	YR	RA

WIRE RANGE				CATALOG NUMBER	CONNECTOR				WIRE STRIP LENGTH		DIMENSIONS TOLERANCES ± .07°		
BARREL A		BARREL B		CLEAR HEAT SHRINK BURNDY® TELECOM KIT STANDARD BARREL	COLOR CODE		DIE INDEX						
AWG	MM²	AWG	MM²		BARREL A	BARREL B	BARREL A	BARREL B	BARREL A	BARREL B	BARREL A	BARREL B	L
2/0 AWG CLASS B,C	70 mm² CLASS 2	2/0 AWG CLASS B,C	70 mm² CLASS 2	YS26LTCKITC	BLACK	BLACK	13	13	1.10	1.10	1.10	1.10	2.41
2/0 AWG CLASS B,C,D,G,H,I,K,M	70 mm² CLASS 5	2/0 AWG CLASS B,C,D,G,H,I,K,M	70 mm² CLASS 5	YS26FXLTCKITC	BLACK	BLACK	13	13	1.10	1.10	1.10	1.10	2.62

INSTALLATION TOOLING (STANDARD BARREL)

CATALOG NUMBER	INSTALLATION TOOLING (# CRIMPS)		INSTALLATION TOOLING (# CRIMPS)		INSTALLATION TOOLING (# CRIMPS)		INSTALLATION TOOLING (# CRIMPS)	
CLEAR HEAT SHRINK BURNDY® TELECOM KIT STANDARD BARREL	HYDRAULIC		HYDRAULIC		MECHANICAL		DIELESS	
	Y750, Y35, Y39, Y46, PAT46 & PAT750		PAT60018V, Y500CTHS		OUR840, MD7-34R		Y644HSXT, Y644MBH, MY29-11, PAT644XT18V- SERIES, MRC840	
	BARREL A	BARREL B	BARREL A	BARREL B	BARREL A	BARREL B	BARREL A	BARREL B
YS26LTCKITC	U26RT (1)	U26RT (1)	W26VT(2) / W26RT(2) / X26RT(2)	W26VT(2) / W26RT(2) / X26RT(2)	W26VT(2) / W26RT(2) / X26RT(2)	W26VT(2) / W26RT(2) / X26RT(2)	MY29-11(1) / MRC840(1) / Y644-(1) / PAT644-(1)	MY29-11(1) / MRC840(1) / Y644-(1) / PAT644-(1)
YS26FXLTCKITC	U26RT (1)	U26RT (1)	W26VT(2) / W26RT(2) / X26RT(2)	W26VT(2) / W26RT(2) / X26RT(2)	W26VT(2) / W26RT(2) / X26RT(2)	W26VT(2) / W26RT(2) / X26RT(2)	MY29-11(1) / MRC840(2) / Y644-(1) / PAT644-(1)	MY29-11(1) / MRC840(2) / Y644-(1) / PAT644-(1)

NOTE: THAT THERE ARE A VARIETY OF BURNDY® INSTALLATION TOOLS AVAILABLE, AND NOT ALL ARE LISTED. IF YOU HAVE QUESTIONS REGARDING TOOLING, PLEASE CONTACT OUR "CUSTOMER SERVICE DEPARTMENT" AT 1-800-346-4175.

KIT		
ITEM	DESCRIPTION	QTY.
A	ELECTRO-TIN PLATED COPPER COMPRESSION CONNECTOR (SEE NOTE 1)	1
B	HEAT SHRINK TUBING (SEE NOTE2)	1
C	MULTILINGUAL INSTALLATION INSTRUCTION SHEET (SEE NOTE3)	1
D	PLASTIC BAG WITH LABELING AND PRODUCT IDENTIFIER	1

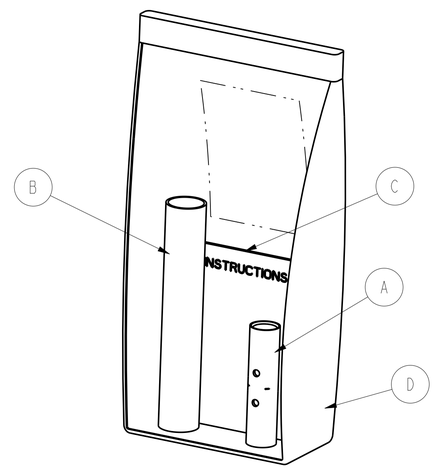

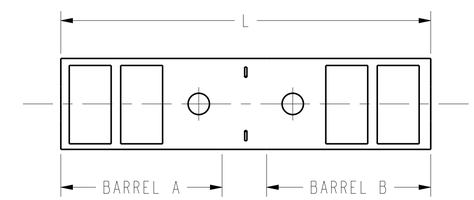

NOTES:

1. ELECTRO-TIN PLATED COPPER COMPRESSSION REDUCER/SPLICE; WITH A THROUGH HOLE FOR CABLE INSPECTION ON EACH SIDE; COLOR CODE, WIRE STRIP LENGTH AND CRIMP PLACEMENT INDICATIONS ARE INCLUDED. STANDARD BARRELS LISTED UL 486A.
2. HEAT SHRINK TUBING:
   CLEAR - POLYVINYL CHLORIDE - LISTED UL 224, VW-1 RATING. (VERTICAL WIRE FLAME TEST)
   - PASSES TELCORDIA GR-347-CORE "ABRASION TEST".
3. EACH KIT IS PACKED IN A SEALED PLASTIC BAG INCLUDING THE INSTALLATION INSTRUCTIONS IN ENGLISH, FRENCH AND SPANISH.
4. SEE TABLE FOR SPECIFIC KIT CATALOG NUMBER.
5. FOR SPECIFIC APPLICATION TOOLS AND DIES, SEE ABOVE TOOLING TABLE.

TO ORDER BURNDY® PRODUCTS CALL

UNITED STATES:
1-800-346-4175 (LONDONDERRY, NH)

CANADA:
1-800-361-6975 (QUEBEC)
1-800-387-6487 (ALL OTHER PROVINCES)

FOR PRODUCT INFO: http://www.burndy.com

COMPRESSION COPPER REDUCER / SPLICE KIT

ITEM NO: --		
CAT. NO: (SEE TABLE)		
DRAWN BY: B.SURESH BABU 6/13/09		
CHECKER: J.MICHAUD 11/24/09		
DSN APPVL: J.MICHAUD 11/24/09		
MFG APPVL: -- --		
QA APPVL: J.BRODEUR 11/25/09		
MKT APPVL: J.SYLVIA 11/23/09		SCALE: 1:2
PROD FAM: CM&R COMPRESSION	DRAWING NO	REV
PROJECT #: --	SIZE	
DOCUMENT TYPE: Sales	D	10101349
REL LEVEL: Released		SHEET 6 OF 13

REV: CREO 08/10/21

DRAWING NO. 10101349

REV	DATE	DESCRIPTION	ECO	BY	C'H'K.
E	2022-09-02 00:00:00 EDT	DRAWING UPDATE AS PER MARKUP	220831023584	YR	RA

WIRE RANGE				CATALOG NUMBER	CONNECTOR				WIRE STRIP LENGTH		DIMENSIONS TOLERANCES ± .07°		
BARREL A		BARREL B		CLEAR HEAT SHRINK BURNDY® TELECOM KIT STANDARD BARREL	COLOR CODE		DIE INDEX						
AWG	MM^2	AWG	MM^2		BARREL A	BARREL B	BARREL A	BARREL B	BARREL A	BARREL B	BARREL A	BARREL B	L
4/0 AWG CLASS B,C	~ ~ ~	4/0 AWG CLASS B,C	~ ~ ~	YS28LTCKITC	PURPLE	PURPLE	15	15	1.24	1.24	1.24	1.24	2.92
4/0 AWG CLASS B,C,D,G,H,I,K,M	120 mm^2 CLASS 5	4/0 AWG CLASS B,C,D,G,H,I,K,M	120 mm^2 CLASS 5	YS28FXLTCKITC	PURPLE	PURPLE	15	15	1.24	1.24	1.24	1.24	2.92

INSTALLATION TOOLING (STANDARD BARREL)

CATALOG NUMBER	INSTALLATION TOOLING (# CRIMPS)		INSTALLATION TOOLING (# CRIMPS)		INSTALLATION TOOLING (# CRIMPS)		INSTALLATION TOOLING (# CRIMPS)	
CLEAR HEAT SHRINK BURNDY® TELECOM KIT STANDARD BARREL	HYDRAULIC		HYDRAULIC		MECHANICAL		DIELESS	
	Y750, Y35, Y39, Y46, PAT46 & PAT750		PAT6001 8V, Y500CTHS		OUR840, MD7-34R		Y644HSXT, Y644MBH, MY29-11, PAT644XT18V- SERIES, MRC840	
	BARREL A	BARREL B	BARREL A	BARREL B	BARREL A	BARREL B	BARREL A	BARREL B
YS28LTCKITC	U28RT (1)	U28RT (1)	W28VT(2) / W28RT(2) / X28RT(3)	W28VT(2) / W28RT(2) / X28RT(3)	W28VT(2) / W28RT(2) / X28RT(3)	W28VT(2) / W28RT(2) / X28RT(3)	MY29-11(1) / MRC840(2) / Y644-(1) / PAT644-(1)	MY29-11(1) / MRC840(2) /Y644-(1) / PAT644-(1)
YS28FXLTCKITC	U28RT (1)	U28RT (1)	W28VT(2) / W28RT(2) / X28RT(3)	W28VT(2) / W28RT(2) / X28RT(3)	W28VT(2) / W28RT(2) / X28RT(3)	W28VT(2) / W28RT(2) / X28RT(3)	MY29-11(1) / MRC840(2) / Y644-(1) / PAT644-(1)	MY29-11(1) / MRC840(2) /Y644-(1) / PAT644-(1)

NOTE: THAT THERE ARE A VARIETY OF BURNDY® INSTALLATION TOOLS AVAILABLE, AND NOT ALL ARE LISTED. IF YOU HAVE QUESTIONS REGARDING TOOLING, PLEASE CONTACT OUR "CUSTOMER SERVICE DEPARTMENT" AT 1-800-346-4175.

KIT		
ITEM	DESCRIPTION	QTY.
A	ELECTRO-TIN PLATED COPPER COMPRESSION CONNECTOR (SEE NOTE 1)	1
B	HEAT SHRINK TUBING (SEE NOTE2)	1
C	MULTILINGUAL INSTALLATION INSTRUCTION SHEET (SEE NOTE3)	1
D	PLASTIC BAG WITH LABELING AND PRODUCT IDENTIFIER	1

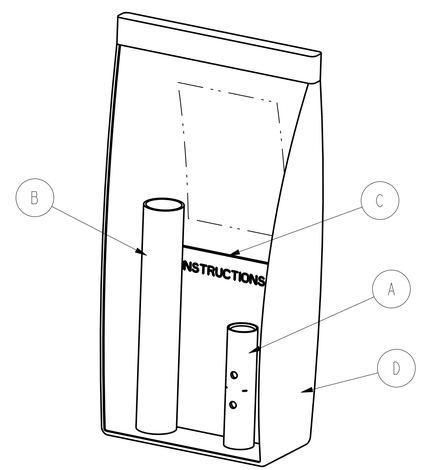

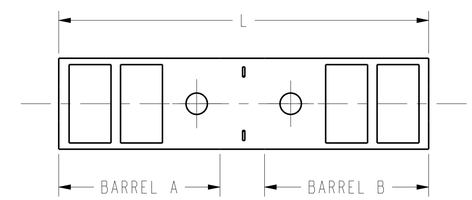

NOTES:

1. ELECTRO-TIN PLATED COPPER COMPRESSSION REDUCER/SPLICE; WITH A THROUGH HOLE FOR CABLE INSPECTION ON EACH SIDE; COLOR CODE, WIRE STRIP LENGTH AND CRIMP PLACEMENT INDICATIONS ARE INCLUDED. STANDARD BARRELS LISTED UL 486A.
2. HEAT SHRINK TUBING:
   CLEAR - POLYVINYL CHLORIDE - LISTED UL 224, VW-1 RATING. (VERTICAL WIRE FLAME TEST)
   - PASSES TELCORDIA GR-347-CORE "ABRASION TEST".
3. EACH KIT IS PACKED IN A SEALED PLASTIC BAG INCLUDING THE INSTALLATION INSTRUCTIONS IN ENGLISH, FRENCH AND SPANISH.
4. SEE TABLE FOR SPECIFIC KIT CATALOG NUMBER.
5. FOR SPECIFIC APPLICATION TOOLS AND DIES, SEE ABOVE TOOLING TABLE.

TO ORDER BURNDY® PRODUCTS CALL
UNITED STATES:
1-800-346-4175 (LONDONDERRY, NH)
CANADA:
1-800-361-6975 (QUEBEC)
1-800-387-6487 (ALL OTHER PROVINCES)
FOR PRODUCT INFO: http://www.burndy.com

COMPRESSION COPPER REDUCER / SPLICE KIT

ITEM NO: --		
CAT. NO: (SEE TABLE)		
DRAWN BY: B.SURESH BABU	6/13/09	
CHECKER: J.MICHAUD	11/24/09	
DSN APPVL: J.MICHAUD	11/24/09	
MFG APPVL: --	--	
QA APPVL: J.BRODEUR	11/25/09	
MKT APPVL: J.SYLVIA	11/23/09	SCALE: 1:2
PROD FAM: CM&R COMPRESSION	DRAWING NO	REV
PROJECT #: -- / SIZE	10101349	E
DOCUMENT TYPE: Sales / D		
REL LEVEL: Released	SHEET 7 OF 13	

REV: CREQ 08/10/21

DRAWING NO. 10101349

REV	DATE	DESCRIPTION	ECO	BY	C'H'K.
E	2022-09-02 00:00:00 EDT	DRAWING UPDATE AS PER MARKUP	220831023584	YR	RA

WIRE RANGE				CATALOG NUMBER	CONNECTOR				WIRE STRIP LENGTH		DIMENSIONS TOLERANCES ± .07°		
BARREL A		BARREL B		CLEAR HEAT SHRINK BURNDY® TELECOM KIT STANDARD BARREL	COLOR CODE		DIE INDEX						
AWG	MM^2	AWG	MM^2		BARREL A	BARREL B	BARREL A	BARREL B	BARREL A	BARREL B	BARREL A	BARREL B	L
4/0 AWG CLASS B,C,D,G,H,I,K,M	~ ~ ~	4/0 AWG CLASS B,C,D,G,H,I,K,M	~ ~ ~	YS29FXLTCKITC	YELLOW	YELLOW	16	16	1.38	1.38	1.38	1.38	3.26

INSTALLATION TOOLING (STANDARD BARREL)

CATALOG NUMBER	INSTALLATION TOOLING (# CRIMPS)		INSTALLATION TOOLING (# CRIMPS)		INSTALLATION TOOLING (# CRIMPS)		INSTALLATION TOOLING (# CRIMPS)	
CLEAR HEAT SHRINK BURNDY® TELECOM KIT STANDARD BARREL	HYDRAULIC		HYDRAULIC		MECHANICAL		DIELESS	
	Y750, Y35, Y39, Y46, PAT46 & PAT750		PAT60018V, Y500CTHS		OUR840, MD7-34R		Y644HSXT, Y644MBH, MY29-11, PAT644XT18V- SERIES, MRC840	
	BARREL A	BARREL B	BARREL A	BARREL B	BARREL A	BARREL B	BARREL A	BARREL B
YS29FXLTCKITC	U29RT (1)	U29RT (1)	W29VT(2) / W29RT(2) / X29RT(4)	W29VT(2) / W29RT(2) / X29RT(4)	W29VT (2) / X29RT (4)	W29VT (2) / X29RT (4)	Y644-(1) / PAT644-(1)	Y644-(1) / PAT644-(1)

NOTE: THAT THERE ARE A VARIETY OF BURNDY® INSTALLATION TOOLS AVAILABLE, AND NOT ALL ARE LISTED. IF YOU HAVE QUESTIONS REGARDING TOOLING, PLEASE CONTACT OUR "CUSTOMER SERVICE DEPARTMENT" AT 1-800-346-4175.

KIT		
ITEM	DESCRIPTION	QTY.
A	ELECTRO-TIN PLATED COPPER COMPRESSION CONNECTOR (SEE NOTE 1)	1
B	HEAT SHRINK TUBING (SEE NOTE2)	1
C	MULTILINGUAL INSTALLATION INSTRUCTION SHEET (SEE NOTE3)	1
D	PLASTIC BAG WITH LABELING AND PRODUCT IDENTIFIER	1

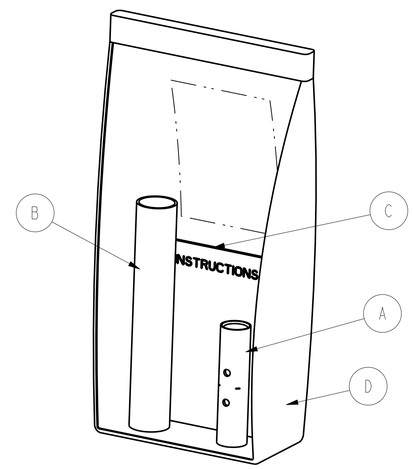

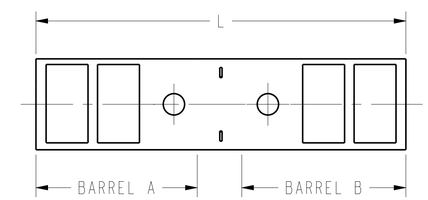

NOTES:

1. ELECTRO-TIN PLATED COPPER COMPRESSSION REDUCER/SPLICE; WITH A THROUGH HOLE FOR CABLE INSPECTION ON EACH SIDE; COLOR CODE, WIRE STRIP LENGTH AND CRIMP PLACEMENT INDICATIONS ARE INCLUDED. STANDARD BARRELS LISTED UL 486A.
2. HEAT SHRINK TUBING:
   CLEAR - POLYVINYL CHLORIDE - LISTED UL 224, VW-1 RATING. (VERTICAL WIRE FLAME TEST)
   - PASSES TELCORDIA GR-347-CORE "ABRASION TEST".
3. EACH KIT IS PACKED IN A SEALED PLASTIC BAG INCLUDING THE INSTALLATION INSTRUCTIONS IN ENGLISH, FRENCH AND SPANISH.
4. SEE TABLE FOR SPECIFIC KIT CATALOG NUMBER.
5. FOR SPECIFIC APPLICATION TOOLS AND DIES, SEE ABOVE TOOLING TABLE.

TO ORDER BURNDY® PRODUCTS CALL

UNITED STATES:
1-800-346-4175 (LONDONDERRY, NH)

CANADA:
1-800-361-6975 (QUEBEC)
1-800-387-6487 (ALL OTHER PROVINCES)

FOR PRODUCT INFO: http://www.burndy.com

COMPRESSION COPPER REDUCER / SPLICE KIT

ITEM NO:	--	
CAT. NO:	(SEE TABLE)	
DRAWN BY:	B.SURESH BABU	6/13/09
CHECKER:	J.MICHAUD	11/24/09
DSN APPVL:	J.MICHAUD	11/24/09
MFG APPVL:	--	--
QA APPVL:	J.BRODEUR	11/25/09
MKT APPVL:	J.SYLVIA	11/23/09
PROD FAM:	CM&R COMPRESSION	
PROJECT #:	--	
DOCUMENT TYPE:	Sales	
REL LEVEL:	Released	

SIZE: D

SCALE: 1:2

DRAWING NO: 10101349

REV: E

SHEET 8 OF 13

REV: CREO 08/10/21

DRAWING NO. 10101349

REV	DATE	DESCRIPTION	ECO	BY	C'H'K.
E	2022-09-02 00:00:00 EDT	DRAWING UPDATE AS PER MARKUP	220831023584	YR	RA

WIRE RANGE				CATALOG NUMBER	CONNECTOR				WIRE STRIP LENGTH		DIMENSIONS TOLERANCES ± .07°		
BARREL A		BARREL B		CLEAR HEAT SHRINK BURNDY® TELECOM KIT STANDARD BARREL	COLOR CODE		DIE INDEX						
AWG	MM²	AWG	MM²		BARREL A	BARREL B	BARREL A	BARREL B	BARREL A	BARREL B	BARREL A	BARREL B	L
350 kcmil CLASS B,C	185 mm² CLASS 2	350 kcmil CLASS B,C	185 mm² CLASS 2	YS3ILTCKITC	RED	RED	18	18	1.42	1.42	1.42	1.42	3.40

INSTALLATION TOOLING (STANDARD BARREL)

CATALOG NUMBER	INSTALLATION TOOLING (# CRIMPS)		INSTALLATION TOOLING (# CRIMPS)		INSTALLATION TOOLING (# CRIMPS)		INSTALLATION TOOLING (# CRIMPS)	
CLEAR HEAT SHRINK BURNDY® TELECOM KIT STANDARD BARREL	HYDRAULIC		HYDRAULIC		MECHANICAL		DIELESS	
	Y750, Y35, Y39, Y46, PAT460 & PAT750		PAT60018V, Y500CTHS		OUR840, MD7-34R		Y644HSXT, Y644MBH, MY29-11, PAT644XT18V- SERIES, MRC840	
	BARREL A	BARREL B	BARREL A	BARREL B	BARREL A	BARREL B	BARREL A	BARREL B
YS3ILTCKITC	U31RT (2)	U31RT (2)	W31VT(2) / W31RT(2)	W31VT(2) / W31RT(2)	W31VT (2)	W31VT (2)	Y644-(1) / PAT644-(1)	Y644-(1) / PAT644-(1)

NOTE: THAT THERE ARE A VARIETY OF BURNDY® INSTALLATION TOOLS AVAILABLE, AND NOT ALL ARE LISTED. IF YOU HAVE QUESTIONS REGARDING TOOLING, PLEASE CONTACT OUR "CUSTOMER SERVICE DEPARTMENT" AT 1-800-346-4175.

KIT		
ITEM	DESCRIPTION	QTY.
A	ELECTRO-TIN PLATED COPPER COMPRESSION CONNECTOR (SEE NOTE 1)	1
B	HEAT SHRINK TUBING (SEE NOTE2)	1
C	MULTILINGUAL INSTALLATION INSTRUCTION SHEET (SEE NOTE3)	1
D	PLASTIC BAG WITH LABELING AND PRODUCT IDENTIFIER	1

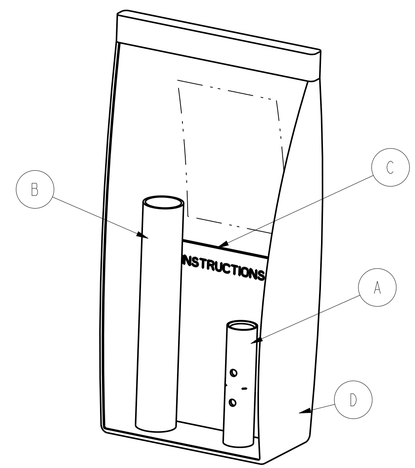

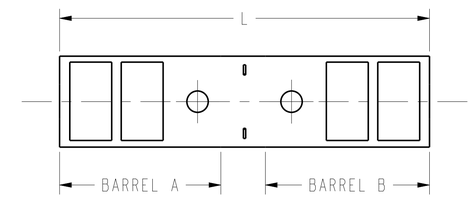

NOTES:

1. ELECTRO-TIN PLATED COPPER COMPRESSSION REDUCER/SPLICE; WITH A THROUGH HOLE FOR CABLE INSPECTION ON EACH SIDE; COLOR CODE, WIRE STRIP LENGTH AND CRIMP PLACEMENT INDICATIONS ARE INCLUDED. STANDARD BARRELS LISTED UL 486A.
2. HEAT SHRINK TUBING:
   CLEAR - POLYVINYL CHLORIDE - LISTED UL 224, VW-1 RATING. (VERTICAL WIRE FLAME TEST)
   - PASSES TELCORDIA GR-347-CORE "ABRASION TEST".
3. EACH KIT IS PACKED IN A SEALED PLASTIC BAG INCLUDING THE INSTALLATION INSTRUCTIONS IN ENGLISH, FRENCH AND SPANISH.
4. SEE TABLE FOR SPECIFIC KIT CATALOG NUMBER.
5. FOR SPECIFIC APPLICATION TOOLS AND DIES, SEE ABOVE TOOLING TABLE.

TO ORDER BURNDY® PRODUCTS CALL

UNITED STATES:
1-800-346-4175 (LONDONDERRY, NH)

CANADA:
1-800-361-6975 (QUEBEC)
1-800-387-6487 (ALL OTHER PROVINCES)

FOR PRODUCT INFO: http://www.burndy.com

COMPRESSION COPPER REDUCER / SPLICE KIT

ITEM NO: --		
CAT. NO: (SEE TABLE)		
DRAWN BY: B.SURESH BABU	6/13/09	HUBBELL® BURNDY®
CHECKER: J.MICHAUD	11/24/09	
DSN APPVL: J.MICHAUD	11/24/09	
MFG APPVL: --	--	
QA APPVL: J.BRODEUR	11/25/09	
MKT APPVL: J.SYLVIA	11/23/09	SCALE: 1:2
PROD FAM: CM&R COMPRESSION		DRAWING NO / REV
PROJECT #: --	SIZE	
DOCUMENT TYPE: Sales	D	10101349 / E
REL LEVEL: Released		SHEET 9 OF 13

REV: CREO 08/10/21

DRAWING NO. 10101349

REV	DATE	DESCRIPTION	ECO	BY	C'H'K.
E	2022-09-02 00:00:00 EDT	DRAWING UPDATE AS PER MARKUP	220831023584	YR	RA

WIRE RANGE				CATALOG NUMBER	CONNECTOR				WIRE STRIP LENGTH		DIMENSIONS TOLERANCES ± .07°		
BARREL A		BARREL B		CLEAR HEAT SHRINK BURNDY® TELECOM KIT STANDARD BARREL	COLOR CODE		DIE INDEX						
AWG	MM²	AWG	MM²		BARREL A	BARREL B	BARREL A	BARREL B	BARREL A	BARREL B	BARREL A	BARREL B	L
500 kcmil CLASS B,C	240 mm² CLASS 2	500 kcmil CLASS B,C	240 mm² CLASS 2	YS34LTCKITC ⟨6⟩	BROWN	BROWN	20	20	1.60	1.60	1.60	1.60	3.87
350 kcmil CLASS B,C,D,G,H,I,K,M	240 mm² CLASS 5	350 kcmil CLASS B,C,D,G,H,I,K,M	240 mm² CLASS 5	YS34FXLTCKITC	BLUE	BLUE	19 OR L80	19 OR L80	1.60	1.60	1.60	1.60	3.87

INSTALLATION TOOLING (STANDARD BARREL)

CATALOG NUMBER	INSTALLATION TOOLING (# CRIMPS)		INSTALLATION TOOLING (# CRIMPS)		INSTALLATION TOOLING (# CRIMPS)		INSTALLATION TOOLING (# CRIMPS)	
CLEAR HEAT SHRINK BURNDY® TELECOM KIT STANDARD BARREL	HYDRAULIC		HYDRAULIC		MECHANICAL		DIELESS	
	Y750, Y35, Y39, Y46, PAT46 & PAT750		PAT60018V, Y500CTHS		OUR840, MD7-34R		Y644HSXT, Y644MBH, MY29-11, PAT644XT18V- SERIES, MRC840	
	BARREL A	BARREL B	BARREL A	BARREL B	BARREL A	BARREL B	BARREL A	BARREL B
YS34LTCKITC ⟨6⟩	U34RT(2)/U31ART(2)	U34RT (2)	W34VT(2) / W34RT(2)	W34VT(2) / W34RT(2)	W34VT (2)	W34VT (2)	Y644-(1) / PAT644-(1)	Y644-(1) / PAT644-(1)
YS34FXLTCKITC	U32RT (2)	U32RT (2)	W32VT(2) / W32RT(2)	W32VT(2) / W32RT(2)	W32VT (2)	W32VT (2)	Y644-(1) / PAT644-(1)	Y644-(1) / PAT644-(1)

NOTE: THAT THERE ARE A VARIETY OF BURNDY® INSTALLATION TOOLS AVAILABLE, AND NOT ALL ARE LISTED. IF YOU HAVE QUESTIONS REGARDING TOOLING, PLEASE CONTACT OUR "CUSTOMER SERVICE DEPARTMENT" AT 1-800-346-4175.

KIT		
ITEM	DESCRIPTION	QTY.
A	ELECTRO-TIN PLATED COPPER COMPRESSION CONNECTOR (SEE NOTE 1)	1
B	HEAT SHRINK TUBING (SEE NOTE2)	1
C	MULTILINGUAL INSTALLATION INSTRUCTION SHEET (SEE NOTE3)	1
D	PLASTIC BAG WITH LABELING AND PRODUCT IDENTIFIER	1

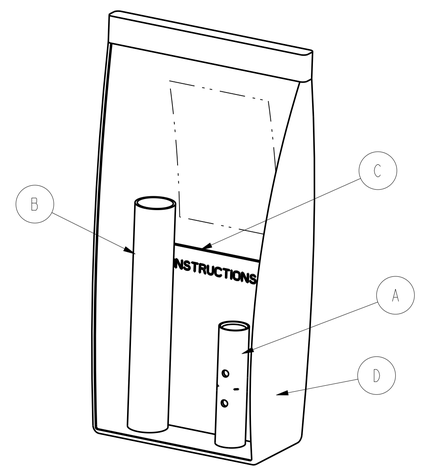

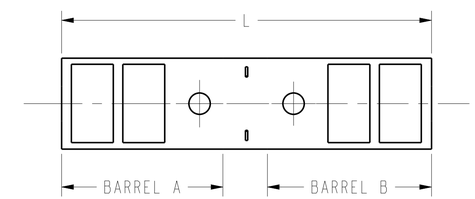

NOTES:

1. ELECTRO-TIN PLATED COPPER COMPRESSSION REDUCER/SPLICE; WITH A THROUGH HOLE FOR CABLE INSPECTION ON EACH SIDE; COLOR CODE, WIRE STRIP LENGTH AND CRIMP PLACEMENT INDICATIONS ARE INCLUDED. STANDARD BARRELS LISTED UL 486A.
2. HEAT SHRINK TUBING:
   CLEAR - POLYVINYL CHLORIDE - LISTED UL 224, VW-1 RATING. (VERTICAL WIRE FLAME TEST)
   - PASSES TELCORDIA GR-347-CORE "ABRASION TEST".
3. EACH KIT IS PACKED IN A SEALED PLASTIC BAG INCLUDING THE INSTALLATION INSTRUCTIONS IN ENGLISH, FRENCH AND SPANISH.
4. SEE TABLE FOR SPECIFIC KIT CATALOG NUMBER.
5. FOR SPECIFIC APPLICATION TOOLS AND DIES, SEE ABOVE TOOLING TABLE.
6. THESE ITEMS WILL BE DEVELOPED IN CONJUCTION WITH TYCO ELECTRONICS POWER SYSTEMS AND WILL HAVE TYCO MARKINGS ON THEM.

TO ORDER BURNDY® PRODUCTS CALL

UNITED STATES:
1-800-346-4175 (LONDONDERRY, NH)

CANADA:
1-800-361-6975 (QUEBEC)
1-800-387-6487 (ALL OTHER PROVINCES)

FOR PRODUCT INFO: http://www.burndy.com

COMPRESSION COPPER REDUCER / SPLICE KIT

ITEM NO:	--	
CAT. NO:	(SEE TABLE)	
DRAWN BY:	B.SURESH BABU	6/13/09
CHECKER:	J.MICHAUD	11/24/09
DSN APPVL:	J.MICHAUD	11/24/09
MFG APPVL:	--	--
QA APPVL:	J.BRODEUR	11/25/09
MKT APPVL:	J.SYLVIA	11/23/09
SCALE: 1:2		
PROD FAM:	CM&R COMPRESSION	
PROJECT #:	--	
DOCUMENT TYPE:	Sales	
REL LEVEL:	Released	
SIZE	D	
DRAWING NO	10101349	
SHEET 10 OF 13		
REV	E	

REV: CREQ 08/10/21

DRAWING NO. 10101349

REV	DATE	DESCRIPTION	ECO	BY	C'H'K.
E	2022-09-02 00:00:00 EDT	DRAWING UPDATE AS PER MARKUP	220831023584	YR	RA

WIRE RANGE				CATALOG NUMBER	CONNECTOR				WIRE STRIP LENGTH		DIMENSIONS TOLERANCES ± .07°		
BARREL A		BARREL B		CLEAR HEAT SHRINK BURNDY® TELECOM KIT STANDARD BARREL	COLOR CODE		DIE INDEX						
AWG	MM²	AWG	MM²		BARREL A	BARREL B	BARREL A	BARREL B	BARREL A	BARREL B	BARREL A	BARREL B	L
500 kcmil CLASS B,C,D,G,H,I,K,M	300 mm² CLASS 5	500 kcmil CLASS B,C,D,G,H,I,K,M	300 mm² CLASS 5	YS38FXLTCKITC ◁6	PINK	PINK	L99	L99	1.77	1.77	1.77	1.77	4.30

INSTALLATION TOOLING (STANDARD BARREL)

CATALOG NUMBER	INSTALLATION TOOLING (# CRIMPS)		INSTALLATION TOOLING (# CRIMPS)		INSTALLATION TOOLING (# CRIMPS)		INSTALLATION TOOLING (# CRIMPS)	
CLEAR HEAT SHRINK BURNDY® TELECOM KIT STANDARD BARREL	HYDRAULIC		HYDRAULIC		MECHANICAL		DIELESS	
	Y750, Y35, Y39, Y46, PAT46 & PAT750		PAT60018V, Y500CTHS		OUR840, MD7-34R		Y644HSXT, Y644MBH, MY29-11, PAT644XT18V- SERIES, MRC840	
	BARREL A	BARREL B	BARREL A	BARREL B	BARREL A	BARREL B	BARREL A	BARREL B
YS38FXLTCKITC ◁6	U38XRT (2)	U38XRT (2)	N/A	N/A	N/A	N/A	Y644-(1) / PAT644-(1)	Y644-(1) / PAT644-(1)

NOTE: THAT THERE ARE A VARIETY OF BURNDY® INSTALLATION TOOLS AVAILABLE, AND NOT ALL ARE LISTED. IF YOU HAVE QUESTIONS REGARDING TOOLING, PLEASE CONTACT OUR "CUSTOMER SERVICE DEPARTMENT" AT 1-800-346-4175.

KIT		
ITEM	DESCRIPTION	QTY.
A	ELECTRO-TIN PLATED COPPER COMPRESSION CONNECTOR (SEE NOTE 1)	1
B	HEAT SHRINK TUBING (SEE NOTE2)	1
C	MULTILINGUAL INSTALLATION INSTRUCTION SHEET (SEE NOTE3)	1
D	PLASTIC BAG WITH LABELING AND PRODUCT IDENTIFIER	1

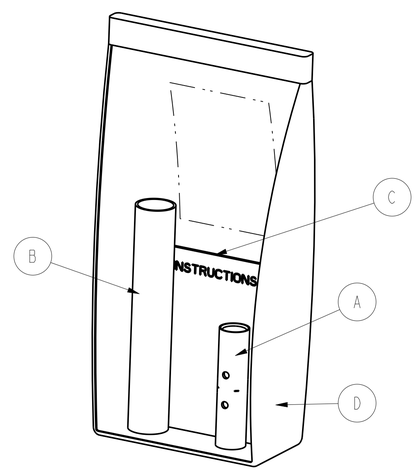

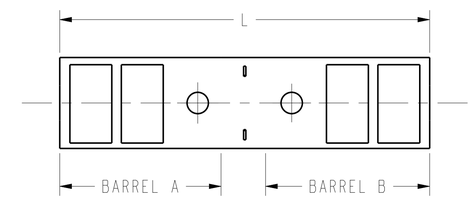

NOTES:

1. ELECTRO-TIN PLATED COPPER COMPRESSSION REDUCER/SPLICE; WITH A THROUGH HOLE FOR CABLE INSPECTION ON EACH SIDE; COLOR CODE, WIRE STRIP LENGTH AND CRIMP PLACEMENT INDICATIONS ARE INCLUDED. STANDARD BARRELS LISTED UL 486A.
2. HEAT SHRINK TUBING:
   CLEAR - POLYVINYL CHLORIDE - LISTED UL 224, VW-1 RATING. (VERTICAL WIRE FLAME TEST)
   - PASSES TELCORDIA GR-347-CORE "ABRASION TEST".
3. EACH KIT IS PACKED IN A SEALED PLASTIC BAG INCLUDING THE INSTALLATION INSTRUCTIONS IN ENGLISH, FRENCH AND SPANISH.
4. SEE TABLE FOR SPECIFIC KIT CATALOG NUMBER.
5. FOR SPECIFIC APPLICATION TOOLS AND DIES, SEE ABOVE TOOLING TABLE.
6. THESE ITEMS WILL BE DEVELOPED IN CONJUCTION WITH TYCO ELECTRONICS POWER SYSTEMS AND WILL HAVE TYCO MARKINGS ON THEM.

TO ORDER BURNDY® PRODUCTS CALL
UNITED STATES:
1-800-346-4175 (LONDONDERRY, NH)
CANADA:
1-800-361-6975 (QUEBEC)
1-800-387-6487 (ALL OTHER PROVINCES)
FOR PRODUCT INFO: http://www.burndy.com

COMPRESSION COPPER REDUCER / SPLICE KIT

ITEM NO:	--	
CAT. NO:	(SEE TABLE)	
DRAWN BY:	B.SURESH BABU	6/13/09
CHECKER:	J.MICHAUD	11/24/09
DSN APPVL:	J.MICHAUD	11/24/09
MFG APPVL:	--	--
QA APPVL:	J.BRODEUR	11/25/09
MKT APPVL:	J.SYLVIA	11/23/09
PROD FAM:	CM&R COMPRESSION	
PROJECT #:	--	
DOCUMENT TYPE:	Sales	
REL LEVEL:	Released	

SIZE: D
DRAWING NO: 10101349
REV: E
SHEET 11 OF 13
SCALE: 1:2

REV: CREQ 08/10/21

DRAWING NO. 10101349

REV	DATE	DESCRIPTION	ECO	BY	C'H'K.
E	2022-09-02 00:00:00 EDT	DRAWING UPDATE AS PER MARKUP	220831023584	YR	RA

WIRE RANGE				CATALOG NUMBER	CONNECTOR				WIRE STRIP LENGTH		DIMENSIONS TOLERANCES ± .07°		
BARREL A		BARREL B		CLEAR HEAT SHRINK BURNDY® TELECOM KIT STANDARD BARREL	COLOR CODE		DIE INDEX						
AWG	MM^2	AWG	MM^2		BARREL A	BARREL B	BARREL A	BARREL B	BARREL A	BARREL B	BARREL A	BARREL B	L
750 kcmil CLASS B,C	~ ~ ~	750 kcmil CLASS B,C	~ ~ ~	YS39LTCKITC <6>	BLACK	BLACK	24	24	1.67	1.67	1.67	1.67	4.13

INSTALLATION TOOLING (STANDARD BARREL)

CATALOG NUMBER	INSTALLATION TOOLING (# CRIMPS)		INSTALLATION TOOLING (# CRIMPS)		INSTALLATION TOOLING (# CRIMPS)		INSTALLATION TOOLING (# CRIMPS)	
CLEAR HEAT SHRINK BURNDY® TELECOM KIT STANDARD BARREL	HYDRAULIC		HYDRAULIC		MECHANICAL		DIELESS	
	Y750, Y35, Y39, Y46, PAT46 & PAT750		PAT60018V, Y500CTHS		OUR840, MD7-34R		Y644HSXT, Y644MBH, MY29-11, PAT644XT18V- SERIES, MRC840	
	BARREL A	BARREL B	BARREL A	BARREL B	BARREL A	BARREL B	BARREL A	BARREL B
YS39LTCKITC <6>	U39RT(2)/P39RT(2)	U39RT(2)/P39RT(2)	N/A	N/A	N/A	N/A	Y644-(1) / PAT644-(1)	Y644-(1) / PAT644-(1)

NOTE: THAT THERE ARE A VARIETY OF BURNDY® INSTALLATION TOOLS AVAILABLE, AND NOT ALL ARE LISTED. IF YOU HAVE QUESTIONS REGARDING TOOLING, PLEASE CONTACT OUR "CUSTOMER SERVICE DEPARTMENT" AT 1-800-346-4175.

KIT		
ITEM	DESCRIPTION	QTY.
A	ELECTRO-TIN PLATED COPPER COMPRESSION CONNECTOR (SEE NOTE 1)	1
B	HEAT SHRINK TUBING (SEE NOTE2)	1
C	MULTILINGUAL INSTALLATION INSTRUCTION SHEET (SEE NOTE3)	1
D	PLASTIC BAG WITH LABELING AND PRODUCT IDENTIFIER	1

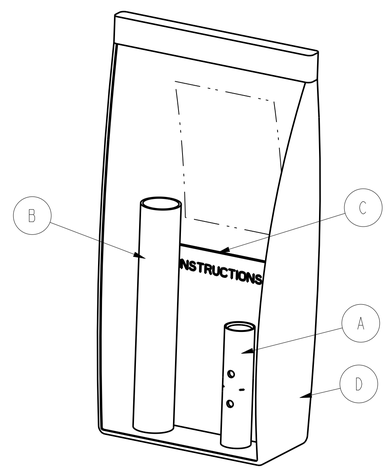

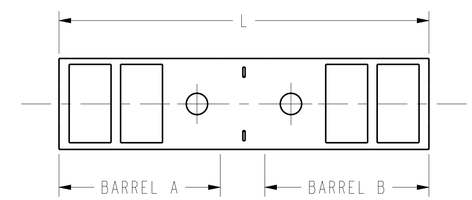

NOTES:

1. ELECTRO-TIN PLATED COPPER COMPRESSSION REDUCER/SPLICE; WITH A THROUGH HOLE FOR CABLE INSPECTION ON EACH SIDE; COLOR CODE, WIRE STRIP LENGTH AND CRIMP PLACEMENT INDICATIONS ARE INCLUDED. STANDARD BARRELS LISTED UL 486A.

2. HEAT SHRINK TUBING:
   CLEAR - POLYVINYL CHLORIDE - LISTED UL 224, VW-1 RATING. (VERTICAL WIRE FLAME TEST)
   - PASSES TELCORDIA GR-347-CORE "ABRASION TEST".

3. EACH KIT IS PACKED IN A SEALED PLASTIC BAG INCLUDING THE INSTALLATION INSTRUCTIONS IN ENGLISH, FRENCH AND SPANISH.

4. SEE TABLE FOR SPECIFIC KIT CATALOG NUMBER.

5. FOR SPECIFIC APPLICATION TOOLS AND DIES, SEE ABOVE TOOLING TABLE.

6. THESE ITEMS WILL BE DEVELOPED IN CONJUCTION WITH TYCO ELECTRONICS POWER SYSTEMS AND WILL HAVE TYCO MARKINGS ON THEM.

TO ORDER BURNDY® PRODUCTS CALL
UNITED STATES:
1-800-346-4175 (LONDONDERRY, NH)
CANADA:
1-800-361-6975 (QUEBEC)
1-800-387-6487 (ALL OTHER PROVINCES)
FOR PRODUCT INFO: http://www.burndy.com

COMPRESSION COPPER REDUCER / SPLICE KIT

ITEM NO:	--	
CAT. NO:	(SEE TABLE)	
DRAWN BY:	B.SURESH BABU	6/13/09
CHECKER:	J.MICHAUD	11/24/09
DSN APPVL:	J.MICHAUD	11/24/09
MFG APPVL:	--	--
QA APPVL:	J.BRODEUR	11/25/09
MKT APPVL:	J.SYLVIA	11/23/09
PROD FAM:	CM&R COMPRESSION	
PROJECT #:	--	
DOCUMENT TYPE:	Sales	
REL LEVEL:	Released	

SIZE: D
DRAWING NO: 10101349
REV: E
SCALE: 1:2
SHEET 12 OF 13

REV: CREQ 08/10/21

DRAWING NO. 10101349

REV	DATE	DESCRIPTION	ECO	BY	C'H'K.
E	2022-09-02 00:00:00 EDT	DRAWING UPDATE AS PER MARKUP	220831023584	YR	RA

WIRE RANGE				CATALOG NUMBER	CONNECTOR				WIRE STRIP LENGTH		DIMENSIONS TOLERANCES ± .07°		
BARREL A		BARREL B		CLEAR HEAT SHRINK BURNDY® TELECOM KIT STANDARD BARREL	COLOR CODE		DIE INDEX						
AWG	MM²	AWG	MM²		BARREL A	BARREL B	BARREL A	BARREL B	BARREL A	BARREL B	BARREL A	BARREL B	L
750 kcmil CLASS B,C,D,G,H,I,K,M	500 mm² CLASS 5	750 kcmil CLASS B,C,D,G,H,I,K,M	500 mm² CLASS 5	YS44FXLTCKITC	YELLOW	YELLOW	L115	L115	1.96	1.96	1.96	1.96	4.81

INSTALLATION TOOLING (STANDARD BARREL)

CATALOG NUMBER	INSTALLATION TOOLING (# CRIMPS)		INSTALLATION TOOLING (# CRIMPS)		INSTALLATION TOOLING (# CRIMPS)		INSTALLATION TOOLING (# CRIMPS)	
CLEAR HEAT SHRINK BURNDY® TELECOM KIT STANDARD BARREL	HYDRAULIC		HYDRAULIC		MECHANICAL		DIELESS	
	Y750, Y35, Y39, Y46, PAT46 & PAT750		PAT60018V, Y500CTHS		OUR840, MD7-34R		Y644HSXT, Y644MBH, MY29-11, PAT644XT18V- SERIES, MRC840	
	BARREL A	BARREL B	BARREL A	BARREL B	BARREL A	BARREL B	BARREL A	BARREL B
YS44FXLTCKITC	U44XRT (2)	U44XRT (2)	N/A	N/A	N/A	N/A	Y644-(1) / PAT644-(1)	Y644-(1) / PAT644-(1)

NOTE: THAT THERE ARE A VARIETY OF BURNDY® INSTALLATION TOOLS AVAILABLE, AND NOT ALL ARE LISTED. IF YOU HAVE QUESTIONS REGARDING TOOLING, PLEASE CONTACT OUR "CUSTOMER SERVICE DEPARTMENT" AT 1-800-346-4175.

KIT		
ITEM	DESCRIPTION	QTY.
A	ELECTRO-TIN PLATED COPPER COMPRESSION CONNECTOR (SEE NOTE 1)	1
B	HEAT SHRINK TUBING (SEE NOTE2)	1
C	MULTILINGUAL INSTALLATION INSTRUCTION SHEET (SEE NOTE3)	1
D	PLASTIC BAG WITH LABELING AND PRODUCT IDENTIFIER	1

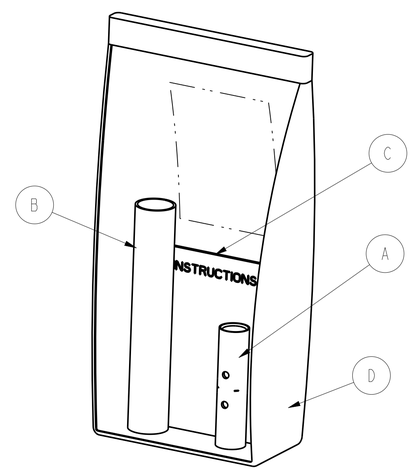

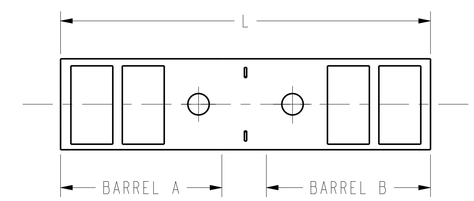

NOTES:

1. ELECTRO-TIN PLATED COPPER COMPRESSSION REDUCER/SPLICE; WITH A THROUGH HOLE FOR CABLE INSPECTION ON EACH SIDE; COLOR CODE, WIRE STRIP LENGTH AND CRIMP PLACEMENT INDICATIONS ARE INCLUDED. STANDARD BARRELS LISTED UL 486A.

2. HEAT SHRINK TUBING:
   CLEAR - POLYVINYL CHLORIDE - LISTED UL 224, VW-1 RATING. (VERTICAL WIRE FLAME TEST)
   - PASSES TELCORDIA GR-347-CORE "ABRASION TEST".

3. EACH KIT IS PACKED IN A SEALED PLASTIC BAG INCLUDING THE INSTALLATION INSTRUCTIONS IN ENGLISH, FRENCH AND SPANISH.

4. SEE TABLE FOR SPECIFIC KIT CATALOG NUMBER.

5. FOR SPECIFIC APPLICATION TOOLS AND DIES, SEE ABOVE TOOLING TABLE.

TO ORDER BURNDY® PRODUCTS CALL

UNITED STATES:
1-800-346-4175 (LONDONDERRY, NH)

CANADA:
1-800-361-6975 (QUEBEC)
1-800-387-6487 (ALL OTHER PROVINCES)

FOR PRODUCT INFO: http://www.burndy.com

COMPRESSION COPPER REDUCER / SPLICE KIT

ITEM NO:	--	
CAT. NO:	(SEE TABLE)	
DRAWN BY:	B.SURESH BABU	6/13/09
CHECKER:	J.MICHAUD	11/24/09
DSN APPVL:	J.MICHAUD	11/24/09
MFG APPVL:	--	--
QA APPVL:	J.BRODEUR	11/25/09
MKT APPVL:	J.SYLVIA	11/23/09
PROD FAM:	CM&R COMPRESSION	
PROJECT #:	--	
DOCUMENT TYPE:	Sales	
REL LEVEL:	Released	

SIZE: D

SCALE: 1:2

DRAWING NO: 10101349

REV: E

SHEET 13 OF 13

REV: CREO 08/10/21