NOTES:

1	CREEPAGE DISTANCE EXTERIOR:	164.0" / 4166mm
	INTERIOR:	27.4" / 696mm
2	ARC DISTANCE:	55.0" / 1407mm
3	NOMINAL VOLTAGE:	145kV
4	NOMINAL CURRENT:	1200A
5	VOLTAGE WITHSTAND, 60 sec.:	335kV
6	B.I.L. :	650kV
7	ROUTINE TEST ACCORDING TO:	CSA C88.1
8	MAX. TORQUE APPLIED ON FLANGE BOLTS:	70 lbf · ft / 94.9 N · m
9	WEIGHT:	359 lb / 162.8 kg

REVISIONS

ZONE	REV.	DESCRIPTION	DRAWN BY	DATE	APPR.
D4, E4, E6	A	ADD THE MINIMUM GASKET SEAT DIMENSION + SOME TOLERANCES HAVE BEEN ADJUSTED PER THE STANDARD	A.SAVARD	2017-02-02	J.V.
D3, A4	B	THE FLANGE HAS BEEN UPDATED + VIEW A-A HAS CHANGED	A.SAVARD	2022-10-07	J.V.

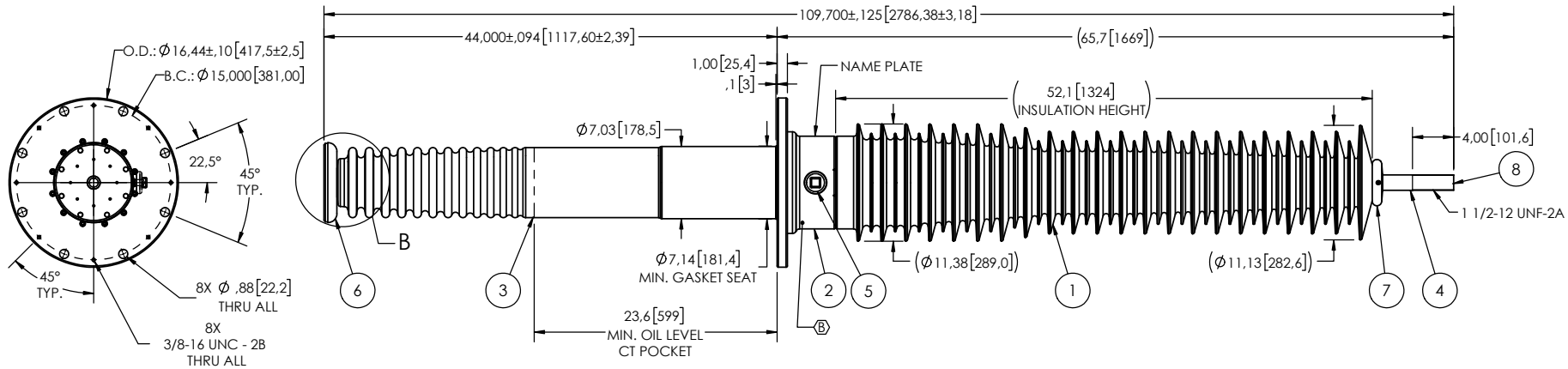

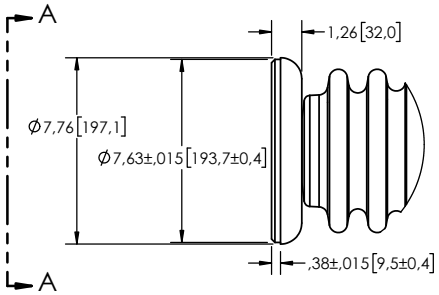

DETAIL B
SCALE 1 : 8

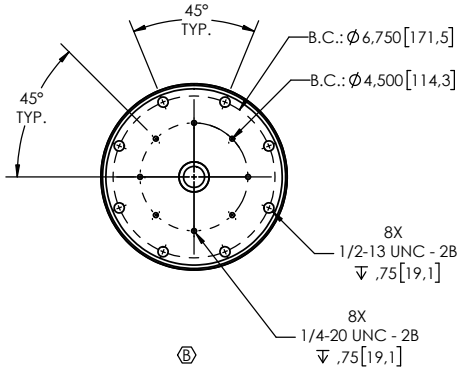

VIEW A-A
SCALE 1 : 8

ITEM NO.	QTY	DRAWING NO.	PART NO.	DESCRIPTION	NOTE / MAT'L
8	1		S-1001-2465-322	3/4 NPT PIPE PLUG	BRASS
7	1	S-2878-4854		CORONA RING TOP	ALUMINUM
6	1	S-8140-7722		CONNECTING PLATE	COPPER
5	1	S-2878-2606	S-2878-2606	CAPACITANCE TAP ASSEMBLY	ALUMINUM
4	1	S-4661-4078		ROD ASSEMBLY	COPPER
3	1	S-4661-4077		SHIELD ASSEMBLY	BRASS
2	1	S-6397-5960		FLANGE	ALUMINUM
1	1	S-8140-7690	-001	CASTING, CYCLOALIPHATIC RESIN	EC-APG-02

PARTS LIST

GENERAL TOLERANCES
(UNLESS OTHERWISE SPECIFIED)

X.	±0.125
.X	±0.094
.XX	±0.063
.XXX	±0.031
ANGLES	±0.25°
RADIUS	±0.031

REMOVE BURRS AND BREAK SHARP EDGES

DIMENSIONS ARE IN INCHES
(UNLESS OTHERWISE SPECIFIED)

DRAWN BY: A.SAVARD
DATE: 2013/01/03
CHECK BY:
PROJECT ENGINEER: 2022/10/13
PROJECT MANAGER:

Electro Composites™
solid HV bushings solution

TITLE:
SDC® BUSHING 145kV, 1200A
MODEL: 650-012-T-114-17

FORMAT	CAGE CODE	DRAWING NO.	REVISION
A		S-8140-7690	B

SCALE 1 : 16
GENERETED BY: SolidWorks 2022
SHEET 1 of 1

This drawing is the proprietary property of Electro Composites (2008) ULC, not part of the public domain, and is issued with the express understanding and agreement that it is not to be reproduced or copied in whole or in part or issued for furnishing information to others, or used directly or indirectly, in any way detrimental to the interest of Electro Composites (2008) ULC and is to be returned upon request by Electro Composites (2008) ULC. All Rights Reserved.