NOTES:

1	CREEPAGE DISTANCE:	20.9" / 530mm
2	ARC DISTANCE:	8.9" / 226mm
3	NOMINAL VOLTAGE:	15kV
4	NOMINAL CURRENT:	1200A
5	WITHSTAND VOLTAGE AT 60 sec.:	50kV
6	B.I.L. :	110kV
7	ROUTINE TEST ACCORDING TO:	IEEE C57.19.01
8	MAX. TORQUE APPLIED ON FLANGE BOLTS:	40 lbf x ft
9	WEIGHT:	26 lbs / 11.8 Kg

REVISIONS					
ZONE	REV.	DESCRIPTION	DRAWN BY	DATE	APPR.

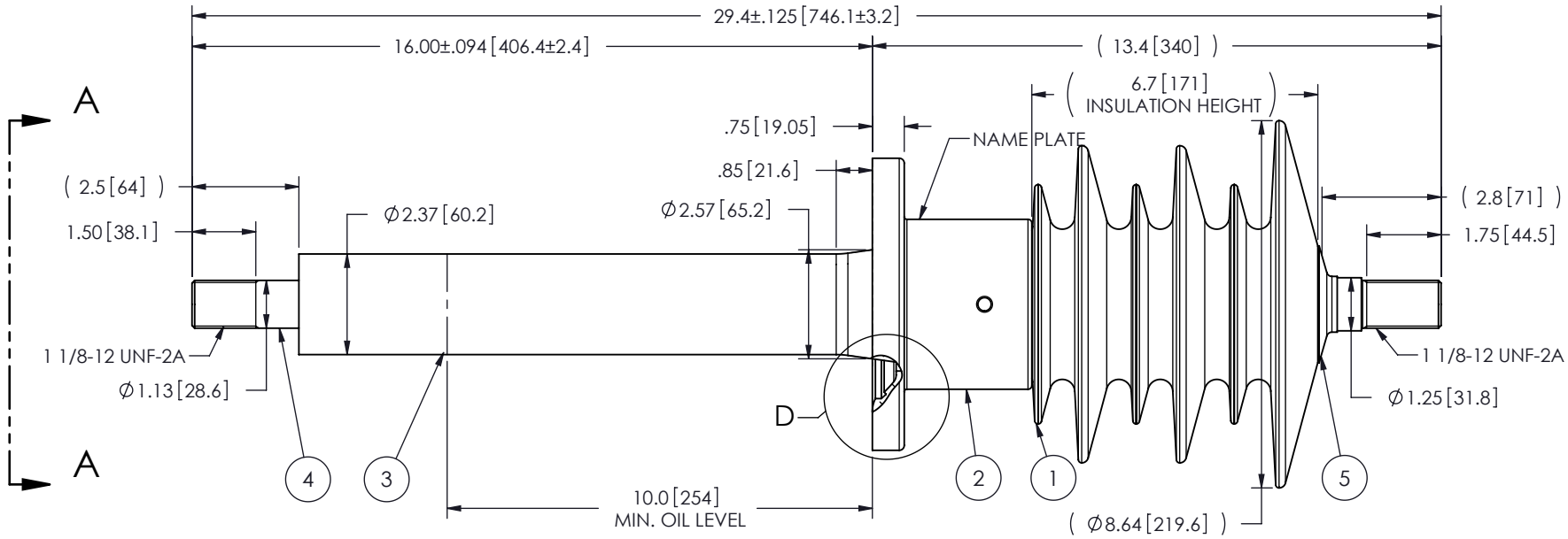

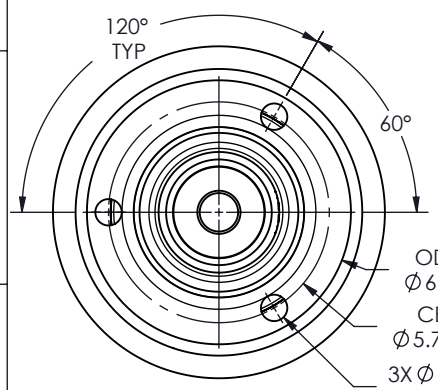

VIEW A-A
SCALE 1:5

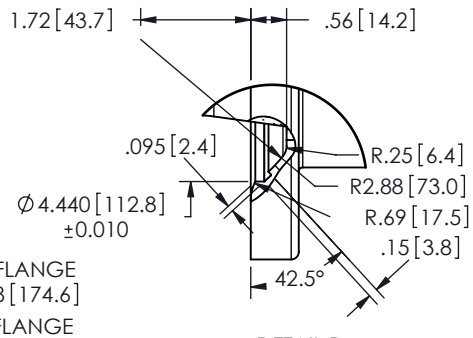

DETAIL D
SCALE 1 : 3

ITEM NO.	QTY	DRAWING NO.	PART NO.	DESCRIPTION	NOTE / MAT'L
5	1	S-1016-0008		CAP	COPPER
4	1	S-6548-6291		ROD ASSEMBLY	COPPER
3	1	S-6548-6290		SHIELD ASSEMBLY	COPPER
2	1	S-6548-6280		FLANGE	ALUMINUM
1	1	S-6548-6279	-001	CASTING, CYCLOALIPHATIC RESIN	EC-APG-02

PARTS LIST

GENERAL TOLERANCES
(UNLESS OTHERWISE SPECIFIED)

X.	±0.125
.X	±0.094
.XX	±0.063
.XXX	±0.031
ANGLES	±1°
RADIUS	±0.063

REMOVE BURRS AND BREAK SHARP EDGES

DIMENSIONS ARE IN INCHES
(UNLESS OTHERWISE SPECIFIED)

EQUIVALENT TO:

DRAWN BY: A.SAVARD
DATE: 2011/01/18
CHECK BY:
PROJECT ING.:
PROJECT MANAGER:

ElectroComposites™
solid HV bushings solution

TITLE:
BUSHING 15kV, 1200A
MODEL: 110-012-B-248-01

FORMAT	CAGE CODE	DRAWING NO.	REVISION
A		S-6548-6279	NR

SCALE: 1:4
GENERETED BY: SolidWorks 2009
SHEET: 1 of 1

This drawing is the proprietary property of Electro Composites (2008) ULC, not part of the public domain, and is issued with the express understanding and agreement that it is not to be reproduced or copied in whole or in part or issued for furnishing information to others, or used directly or indirectly, in any way detrimental to the interest of Electro Composites (2008) ULC and is to be returned upon request by Electro Composites (2008) ULC. All Rights Reserved.