ACCOMMODATES		
COLOR ID	1 CONNECTOR	CONDUCTOR
BLUE & RED	YHME18H-H1	AN20-18 CU. AIR CABLE
	YHME14H-H1	AN16-14 CU. AIR CABLE
BLACK	YHME22-H	AN22 CU. CABLE

REV.	DATE	DESCRIPTION	ECO	BY	C'K'D.
6	10/6/00	REDRAWN TO CAD AND ADD NOTE 1 PER ECO.	5142	DB	PL/BM

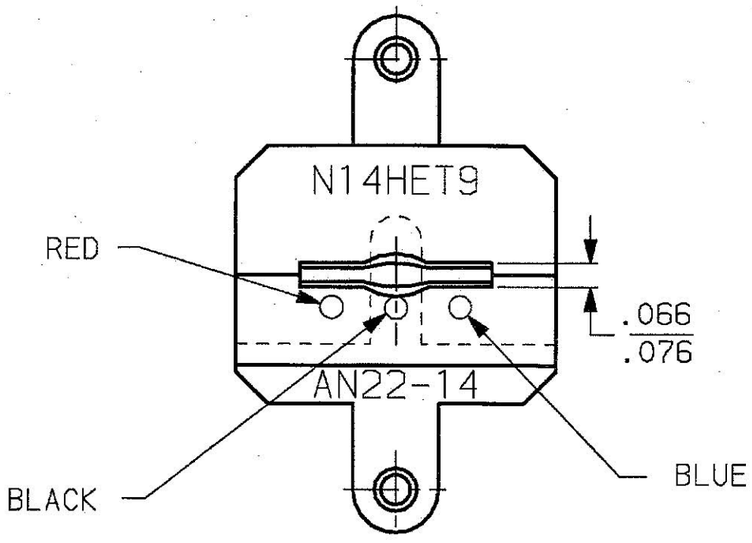

COLOR IDENTIFICATION

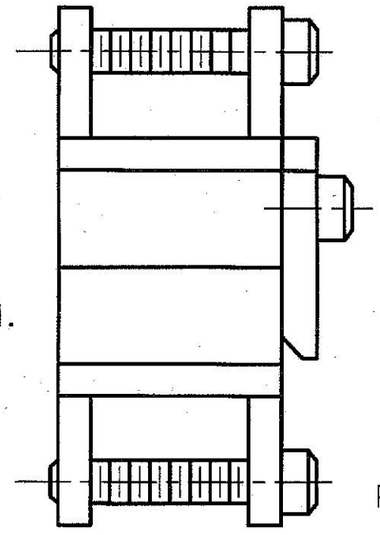

REFERENCE:
FACTORY ASSEMBLY - FA29559

MATERIALS:
HEAT TREATED STEEL, PLATED.

NOTE:

1. YHME-H SERIES CONNECTORS ARE NO LONGER AVAILABLE FROM FCI USA, INC.

2. USED ON M8ND HAND HYLUGGER AND Y8ND HYLUGGER.

REV. 012000

TO ORDER BURNDY PRODUCTS CALL 1-800-346-4175
MANCHESTER, NH 03109, USA
FOR PRODUCT INFO = http://www.fciconnect.com

DIE SET

CAT NO: N14HET-9	SCALE NTS
DRAWN: R.J.N. 10/27/53	CHECKED: FGM 11/11/53
DSGN APPVL: .	MFG APPVL: .
	MKTG APPVL: N/A
	Q.A. APPVL: .
	CAD FILE: SA29417-01_B
	MDL REF: N/A
BURNDY	DRAWING NO. SA29417 — REV 6
	SHEET 1 OF 1