DRAWING NO. 30003952

CATALOG NUMBER	FIG. NO.	CONDUCTOR AWG	CONDUCTOR MM²	STUD HOLE SIZE	DIMENSIONS O.D.	B	C	D MIN.	K DIA.	L	N	T	INSTALLATION TOOLING DIELESS (# OF CRIMPS)	MECHANICAL MD6, OUR840, MD7-34R	HYDRAULIC BCT500HS, Y500CTHS	Y35, Y39, Y750, PAT750	Y46 PAT46	Y45	Y48	Y60	COLOR CODE	DIE INDEX	WIRE STRIP LENGTH
YA8CLNT6	1	#8 AWG	10	6	.27 [7]	.44 [11]	.29 [7]	.41 [10]	.15 [4]	1.08 [27]	.19 [5]	.09 [2]	Y8MRB1 (1) MY293 (1) MRC840 (1) Y81KFT (1) PAT81KFT (1) Y1MRTC (1) Y122CMR (1)	W8CVT (1)	X8CRT (1)	U8CRT (1)	U8CRT (1)	U8CRT (1)	--	--	RED	49	1/2"
YA8CLNT8	1			8	.27 [7]	.44 [11]	.33 [8]	.47 [12]	.18 [5]	1.18 [30]	.22 [6]	.09 [2]											
YA8CLNT10	1	#8 AWG	10	8	.27 [7]	.44 [11]	.33 [8]	.52 [13]	.20 [5]	1.18 [30]	.22 [6]	.09 [2]											
YA6CLNT6	1	#6 AWG	--	6	.29 [7]	.54 [14]	.29 [7]	.41 [10]	.15 [4]	1.17 [30]	.19 [5]	.09 [2]		W5CVT (1)	X5CRT (1)	U5CRT (1)	U5CRT (1)	U5CRT (1)	--	--	BLUE	7	7/8"
YA4CLNT10	1	#4 AWG	--	#10	.34 [9]	.81 [21]	.40 [10]	.64 [16]	.20 [5]	1.73 [44]	.31 [8]	.09 [2]	MY29-3 (1) Y1MRTC 2) Y122CMR (2) MY29-11 (1) MRC840 Y644HS (1) Y81KFT(1) Y81KFTMBH (1) PAT81KFT-18V (1) PAT644 (1) PAT444 (1)	W4CVT (1)	X4CRT (1)	U4CRT (1)	U4CRT (1)	U4CRT (1)	--	--	GRAY	8	7/8"
YA3CLNT14	1	#3 AWG #2SOL.	25	1/4"	.38 [10]	.88 [22]	.41 [10]	.70 [18]	.27 [7]	1.82 [46]	.31 [8]	.09 [2]		--	--	U3CRT (1)	U3CRT (1)	U3CRT (1)	--	--	WHITE	9	15/16"
YA3CLNT5/16	1			5/16"	.38 [10]	.88 [22]	.49 [12]	.62 [16]	.33 [8]	1.80 [46]	.25 [6]	.09 [2]											
YA2CLNT10	1	#2 AWG	35	#10	.42 [11]	.88 [22]	.48 [12]	.56 [14]	.20 [5]	1.80 [46]	.25 [6]	.11 [3]		W2CVT (1)	X2CRT (1)	U2CRT (1)	U2CRT (1)	U2CRT (1)	--	--	BROWN	10	15/16"
YA2CLNT14	1			1/4"	.42 [11]	.88 [22]	.50 [13]	.56 [14]	.27 [7]	1.80 [46]	.25 [6]	.11 [3]											
YA2CLNT5/16	1			5/16"	.42 [11]	.88 [22]	.49 [12]	.62 [16]	.33 [8]	1.82 [46]	.25 [6]	.11 [3]											
YA1CLNT10	1	#1 AWG	50	#10	.46 [12]	.88 [22]	.50 [13]	.94 [24]	.20 [5]	2.23 [57]	.25 [6]	.10 [3]	MY29-3(1) MY29-11 (1) MRC840 Y644HS (1) Y81KFT(1) Y81KFTMBH (1) PAT81KFT-18V (1) PAT644 (1) PAT444 (1)	W1CVT (1)	X1CRT-1 (1)	U1CRT-1 (1)	U1CRT-1 (1)	U1CRT-1 (1)	--	--	GREEN	11	15/16"
YA1CLNT14	1			1/4"	.46 [12]	.88 [22]	.50 [13]	.94 [24]	.27 [7]	2.23 [57]	.25 [6]	.10 [3]											
YA1CLNT5/16	1	#1 AWG	35	5/16"	.46 [12]	.63 [16]	.44 [11]	.70 [18]	.33 [8]	1.78 [45]	.34 [9]	.10 [3]	Y1MRTC(2) MY29-11(1) Y81KFT(1) Y644(1) Y444(1)	W1CVT (1)	X1CRT-1 (1)	U1CRT-1 (1)	U1CRT-1 (1)	U1CRT-1 (1)	--	--	GREEN	11	15/16"
YA25LNT10	1	1/0 AWG	--	#10	.51 [13]	.88 [22]	.62 [16]	.94 [24]	.20 [5]	2.28 [58]	.33 [8]	.12 [3]	MY29-3(1) MY29-11 (1) MRC840 Y644HS (1) Y81KFT(1) Y81KFTMBH (1) PAT81KFT-18V (1) PAT644 (1) PAT444 (1)	W25VT (2)	X25RT (2)	U25RT (1)	U25RT (1)	U25RT (1)	--	--	PINK	12	15/16"
YA25LNT14	1			1/4"	.51 [13]	.88 [22]	.48 [12]	.67 [17]	.27 [7]	1.93 [49]	.31 [8]	.12 [3]											
YA25LNT5/16	1			5/16"	.51 [13]	.88 [22]	.62 [16]	.94 [24]	.33 [8]	2.28 [58]	.33 [8]	.12 [3]											
YA25LNT38	1			3/8"	.51 [13]	.88 [22]	.62 [16]	.85 [22]	.41 [10]	2.18 [55]	.41 [10]	.12 [3]											
YA26LNT10	1	2/0 AWG	70	#10	.56 [14]	.94 [24]	.62 [16]	1.14 [29]	.20 [5]	2.62 [67]	.33 [8]	.13 [3]		W26VT (2)	X26RT (2)	U26RT (1)	U26RT (1)	U26RT (1)	--	--	BLACK	13	1"
YA26LNT14	1			1/4"	.56 [14]	.94 [24]	.48 [12]	.59 [15]	.27 [7]	2.02 [51]	.25 [6]	.13 [3]											
YA26LNT5/16	1			5/16"	.56 [14]	.94 [24]	.62 [16]	1.14 [29]	.33 [8]	2.62 [67]	.33 [8]	.13 [3]											
YA26LNT38	1			3/8"	.56 [14]	.94 [24]	.72 [18]	1.02 [26]	.41 [10]	2.51 [64]	.41 [10]	.12 [3]											

TOLERANCE BLOCK							
CONNECTOR SIZE	TOLERANCES						
	B	C	E	K DIA.	L	N	O.D.
-8C THRU -25	±.06	±.04	±.02	±.02	±.09	±.03	±.01
-26 THRU -34	±.08	±.04	±.02	±.02	±.12	±.03	±.01
-35 AND UP	±.09	±.06	±.02	±.02	±.15	±.06	±.01

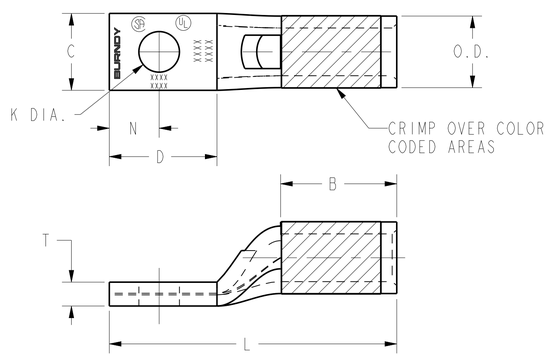

FIG.1

NOTES:

1. MATERIAL: COPPER TUBING.
2. FINISH: TIN PLATED.
3. DIMENSIONS IN BRACKETS [] ARE IN MILLIMETERS ROUNDED OFF TO THE NEAREST MILLIMETER, UNLESS OTHERWISE NOTED, AND ARE FOR REFERENCE ONLY.
4. INSTALLATION TOOLING AND DIES ARE CONSTANTLY BEING UPDATED. FOR THE LATEST INSTALLATION TOOLING INFORMATION REFER TO THE MASTER CATALOG ON THE BURNDY WEBSITE.

REV	DATE	DESCRIPTION	ECO	BY	C'H'K.
AC	2023-06-28 00:00:00 EDT	UPDATED AS PER MARKUP	230627031433	YR	RA

TO ORDER BURNDY® PRODUCTS CALL
UNITED STATES: 1-800-346-4175 (LONDONDERRY, NH)
CANADA: 1-800-361-6975 (QUEBEC) 1-800-387-6487 (ALL OTHER PROVINCES)
FOR PRODUCT INFO: http://www.burndy.com

HYLUG™ COPPER (NARROW TONGUE)

ITEM NO:	N/A
CAT. NO:	YA-L-NT-(TABLE)
DRAWN BY:	AUGUSTIN.S 07/03/10
CHECKER:	-- --
DSN APPVL:	J MICHAUD 06/11/11
MFG APPVL:	T THRELFALL 06/23/11
QA APPVL:	T WATTS 06/13/11
MKT APPVL:	J SYLVIA 06/13/11
PROD FAM:	CM&R COMPRESSION
PROJECT #:	--
DOCUMENT TYPE:	Sales
REL LEVEL:	Released
SIZE	D
SCALE:	1:1
DRAWING NO	30003952
REV	AC
SHEET	1 OF 12

REV: CREO 08/10/21

DRAWING NO. 30003952

CATALOG NUMBER	FIG. NO.	CONDUCTOR AWG	CONDUCTOR MM²	STUD HOLE SIZE	DIMENSIONS O.D.	B	C	D MIN.	K DIA.	L	N	T	DIELESS (# OF CRIMPS)	INSTALLATION TOOLING MECHANICAL MD6, OUR840, MD7-34R	HYDRAULIC BCT500HS, Y500CTHS	Y35, Y39, Y750, PAT750	Y46 PAT46	Y45	Y48	Y60	COLOR CODE	DIE INDEX	WIRE STRIP LENGTH
YA27LNT14	1	3/0 AWG	--	1/4"	.62 [16]	1.00 [25]	.76 [19]	.67 [17]	.27 [7]	2.10 [53]	.31 [8]	.13 [3]	Y644HS (1) Y81KFT(2) Y81KFTMBH (2) PAT81KFT-18V (2) PAT644 (1) PAT444 (1)	W27VT(2)	X27RT(3)	U27RT(1)	U27RT(1)	U27RT(1)	--	--	ORANGE	14	1-1/16"
YA27LNT516	1			5/16"	.62 [16]	1.00 [25]	.60 [15]	.77 [20]	.33 [8]	2.17 [55]	.34 [9]	.12 [3]											
YA27LNT38	1			3/8"	.62 [16]	1.00 [25]	.73 [19]	1.14 [29]	.41 [10]	2.64 [67]	.41 [10]	.12 [3]											
YA28LNT14	1	4/0 AWG	--	1/4"	.69 [18]	.88 [22]	.76 [19]	1.07 [27]	.27 [7]	2.60 [66]	.31 [8]	.14 [4]		W28VT(2)	X28RT(3)	U28RT(1)	U28RT(1)	U28RT(1)	C28R(1)	L28RT(1)	PURPLE	15	1-1/8"
YA28LNT516	1			5/16"	.69 [18]	.88 [22]	.70 [18]	.77 [20]	.33 [8]	2.09 [53]	.34 [9]	.14 [4]											
YA28LNT38	1			3/8"	.69 [18]	.88 [22]	.76 [19]	1.14 [29]	.41 [10]	2.67 [68]	.41 [10]	.14 [4]											
YA29LENT516	1	250 kcmil	--	5/16"	.75 [19]	1.06 [27]	.76 [19]	.72 [18]	.33 [8]	2.48 [63]	.34 [9]	.16 [4]		W29VT(2)	X29RT(4)	U29RT(1)	U29RT(1)	U29RT(1)	L29R(1)	L29RT(1)	YELLOW	16	1-1/8"
YA29LENT38	1			3/8"	.75 [19]	1.06 [27]	.76 [19]	1.20 [30]	.41 [10]	2.96 [75]	.41 [10]	.16 [4]											
YA29LNT38	1			3/8"	.75 [19]	1.06 [27]	.96 [24]	1.20 [30]	.41 [10]	2.96 [75]	.41 [10]	.16 [4]											
YA29LNT12	1			1/2"	.75 [19]	1.06 [27]	.96 [24]	1.20 [30]	.53 [13]	3.08 [78]	.53 [13]	.16 [4]											
YA30LNT14	1	300 kcmil	150	1/4"	.81 [21]	1.03 [26]	.83 [21]	.71 [18]	.27 [7]	2.26 [57]	.31 [8]	.16 [4]		W30VT(4)	----	U30RT(2)	U30RT(2)	U30RT(2)	C30R(2)	L30RT(1)	WHITE	17	1-1/8"
YA30LNT38	1			3/8"	.81 [21]	1.03 [26]	.96 [24]	1.20 [30]	.41 [10]	2.97 [75]	.41 [10]	.16 [4]											
YA30LNT12	1			1/2"	.81 [21]	1.03 [26]	.96 [24]	1.20 [30]	.53 [13]	3.09 [78]	.53 [13]	.16 [4]											
YA31LNT38	1	350 kcmil	185	3/8"	.88 [22]	1.06 [27]	.96 [24]	1.45 [37]	.41 [10]	3.31 [84]	.41 [10]	.18 [4]		W31VT(4)	----	U31RT(2)	U31RT(2)	U31RT(2)	C31R(2)	L31RT(1)	RED	18	1-3/16"
YA31LNT12	1			1/2"	.88 [22]	1.06 [27]	.88 [22]	1.14 [29]	.53 [13]	2.75 [70]	.53 [13]	.18 [4]											
YA32LNT38	1	400 kcmil	--	3/8"	.95 [24]	1.19 [30]	.96 [24]	1.20 [30]	.41 [10]	3.21 [82]	.41 [10]	.20 [5]		W32VT(4)	----	U32RT(2)	U32RT(2)	U32RT(2)	C32R(2)	L32RT(1)	BLUE	19 OR 470	1-1/4"
YA32LNT12	1			1/2"	.95 [24]	1.19 [30]	.96 [24]	1.20 [30]	.53 [13]	3.21 [82]	.53 [13]	.19 [5]											
YA34LNT38	1	500 kcmil	240	3/8"	1.06 [27]	1.27 [32]	.96 [24]	1.45 [37]	.41 [10]	3.65 [93]	.41 [10]	.23 [6]		W34VT(4)	----	U34RT(2)	U34RT(2)	U34RT(2)	C34R(1)	L34RT(1)	BROWN	20 OR 299	1-7/16"
YA34LNT12	1			1/2"	1.06 [27]	1.27 [32]	.96 [24]	1.45 [37]	.53 [13]	3.65 [93]	.53 [13]	.23 [6]											
YA36LNT38	1	600 kcmil	300	3/8"	1.18 [30]	1.38 [35]	1.12 [28]	1.70 [43]	.41 [10]	4.09 [104]	.50 [13]	.27 [7]		----	----	U36RT(2)	U36RT(2)	U36RT(2)	C36R(1)	L36RT(1)	GREEN	22	1-3/4"
YA36LNT12	1			1/2"	1.188 [30]	1.38 [35]	1.00 [25]	1.17 [30]	.53 [13]	3.29 [84]	.53 [13]	.27 [7]											
YA39LNT38	1	750 kcmil	--	3/8"	1.300 [33]	1.42 [36]	1.12 [28]	1.70 [36]	.41 [10]	4.24 [108]	.50 [13]	.27 [7]	Y81KFT (3) Y81KFTMBH (3) PAT81KFT-18V (3) PAT644 (1) PAT444 (1)	----	----	U39RT(2)	U39RT(2)	U39RT(2)	C39R(1)	L39RT(1)	BLACK	24	1-15/16"
YA39LNT12	1			1/2"	1.300 [33]	1.42 [36]	1.63 [41]	1.70 [36]	.56 [14]	4.24 [108]	.53 [13]	.27 [7]											
YA39LNT58	1			5/8"	1.300 [33]	1.42 [36]	1.30 [33]	1.43 [36]	.69 [10]	3.67 [93]	.66 [17]	.27 [7]											

TOLERANCE BLOCK							
CONNECTOR SIZE	TOLERANCES						
	B	C	E	K DIA.	L	N	O.D.
-8C THRU -25	±.06	±.04	±.02	±.02	±.09	±.03	±.01
-26 THRU -34	±.08	±.04	±.02	±.02	±.12	±.03	±.01
-35 AND UP	±.09	±.06	±.02	±.02	±.15	±.06	±.01

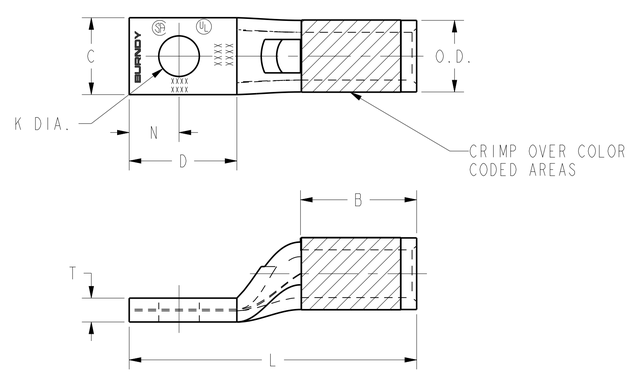

FIG.1

NOTES:

1. MATERIAL: COPPER TUBING.
2. FINISH: TIN PLATED.
3. DIMENSIONS IN BRACKETS [] ARE IN MILLIMETERS ROUNDED OFF TO THE NEAREST MILLIMETER, UNLESS OTHERWISE NOTED,AND ARE FOR REFERENCE ONLY.
4. INSTALLATION TOOLING AND DIES ARE CONSTANTLY BEING UPDATED. FOR THE LATEST INSTALLATION TOOLING INFORMATION REFER TO THE MASTER CATALOG ON THE BURNDY WEBSITE.

REV	DATE	DESCRIPTION	ECO	BY	C'H'K.
AC	2023-06-28 00:00:00 EDT	UPDATED AS PER MARKUP	230627031433	YR	RA

TO ORDER BURNDY® PRODUCTS CALL
UNITED STATES: 1-800-346-4175 (LONDONDERRY, NH)
CANADA: 1-800-361-6975 (QUEBEC) 1-800-387-6487 (ALL OTHER PROVINCES)
FOR PRODUCT INFO: http://www.burndy.com

HYLUG™ COPPER (NARROW TONGUE)

ITEM NO:	N/A	
CAT. NO:	YA-L-NT-(TABLE)	
DRAWN BY:	AUGUSTIN.S	07/03/10
CHECKER:	--	--
DSN APPVL:	J MICHAUD	06/11/11
MFG APPVL:	T THRELFALL	06/23/11
QA APPVL:	T WATTS	06/13/11
MKT APPVL:	J SYLVIA	06/13/11
PROD FAM:	CM&R COMPRESSION	
PROJECT #:	--	
DOCUMENT TYPE:	Sales	
REL LEVEL:	Released	

SIZE: D
DRAWING NO: 30003952
REV: AC
SCALE: 1:1
SHEET 2 OF 12

REV: CREQ 08/10/21

DRAWING NO. 30003952

CATALOG NUMBER	FIG. NO.	CONDUCTOR AWG	CONDUCTOR MM²	STUD HOLE SIZE	DIMENSIONS O.D.	B	C	D MIN.	E	K DIA.	L	N	T	INSTALLATION TOOLING DIELESS (# OF CRIMPS)	MECHANICAL MD6, OUR840, MD7-34R	HYDRAULIC BCT500HS, Y500CTHS	Y35, Y39, Y750, PAT750	Y46 PAT46	Y45	Y48	Y60	COLOR CODE	DIE INDEX	WIRE STRIP LENGTH
YA2CL2NTI4	2	#2 AWG	35	1/4"	.42 [11]	.88 [22]	.48 [12]	1.26 [32]	.63 [16]	.27 [7]	2.47 [63]	.31 [8]	.11 [3]	Y122CMR (2) MRC840(1) MY29-3(1) MY29-11(1) Y644HS(1) Y1MRTC(2) Y81KFT(1) Y81KFTMBH(1) PAT81KFT-18V(1) PAT644 (1) PAT444 (1)	W2CVT(1)	W2CVT(1)	U2CRT(1)	U2CRT(1)	U2CRT(1)	--	--	BROWN	10	15/16"
YA2CL2NTI4E2	2			1/4"	.42 [11]	.88 [22]	.48 [12]	1.39 [35]	.75 [19]	.27 [7]	2.60 [66]	.31 [8]	.11 [3]											
YA2CL2NTI4E1	2			1/4"	.42 [11]	.88 [22]	.48 [12]	1.64 [42]	1.00 [25]	.27 [7]	2.84 [72]	.31 [8]	.11 [3]											
YA1CL2NTI4	2	#1 AWG	50	1/4"	.46 [12]	.88 [22]	.50 [13]	1.26 [32]	.63 [16]	.27 [7]	2.55 [65]	.31 [8]	.11 [3]	MRC840(1) MY29-3(1) MY29-11(1) Y1MRTC(2) Y644HS(1) Y81KFT(1) PAT444 (1) PAT81KFT-18V(1)	W1CVT(1)	X1CRT-1(1)	U1CRT-1 (1)	U1CRT-1 (1)	U1CRT-1 (1)	--	--	GREEN	11	15/16"
YA1CL2NTI4E2	2			1/4"	.46 [12]	.88 [22]	.50 [13]	1.39 [35]	.75 [19]	.27 [7]	2.68 [68]	.31 [8]	.10 [3]											
YA25L2NTI4	2	1/0 AWG	--	1/4"	.51 [13]	.88 [22]	.48 [12]	1.30 [33]	.63 [16]	.27 [7]	2.56 [65]	.31 [8]	.10 [3]	MRC840(2) MY29-3(1) MY29-11(1) Y644HS(1) Y81KFT(1) PAT444 (1) PAT81KFT-18V(1)	W25VT(2)	W25VT(2)	U25RT(1)	U25RT(1)	U25RT(1)	--	--	PINK	12	15/16"
YA25L2NTI4E1	2			1/4"	.51 [13]	.88 [22]	.48 [12]	1.94 [49]	1.00 [25]	.27 [7]	3.28 [83]	.25 [6]	.12 [3]											
YA26L2NTI4	2	2/0 AWG	70	1/4"	.56 [14]	.94 [24]	.48 [12]	1.22 [31]	.63 [16]	.27 [7]	2.66 [68]	.25 [6]	.12 [3]	MRC840(2) MY29-3(1) MY29-11(1) Y644HS(1) Y81KFT(1) PAT444 (1) PAT81KFT-18V(1)	W26VT(1)	W26VT(2) X26RT(2)	U26RT(1)	U26RT(1)	U26RT(1)	--	--	BLACK	13	1"
YA26L2NTI4E1	2		--	1/4"	.56 [14]	.94 [24]	.48 [12]	1.60 [41]	1.00 [25]	.27 [7]	3.03 [77]	.25 [6]	.12 [3]											

TOLERANCE BLOCK							
CONNECTOR SIZE	TOLERANCES						
	B	C	E	K DIA.	L	N	O.D.
-8C THRU -25	±.06	±.04	±.02	±.02	±.09	±.03	±.01
-26 THRU -34	±.08	±.04	±.02	±.02	±.12	±.03	±.01
-35 AND UP	±.09	±.06	±.02	±.02	±.15	±.06	±.01

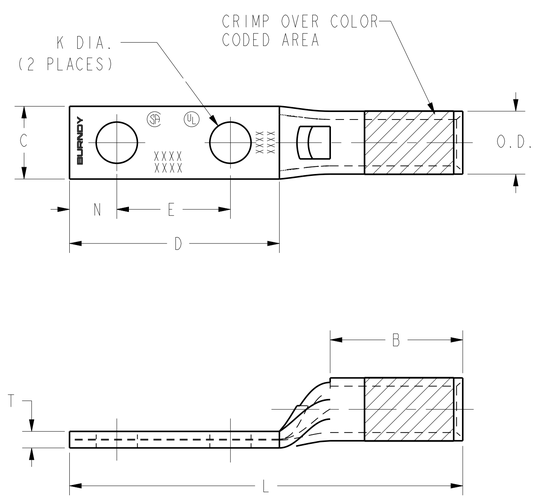

FIG.2

NOTES:

1. MATERIAL: COPPER TUBING.
2. FINISH: TIN PLATED.
3. DIMENSIONS IN BRACKETS [] ARE IN MILLIMETERS ROUNDED OFF TO THE NEAREST MILLIMETER, UNLESS OTHERWISE NOTED,AND ARE FOR REFERENCE ONLY.
4. INSTALLATION TOOLING AND DIES ARE CONSTANTLY BEING UPDATED. FOR THE LATEST INSTALLATION TOOLING INFORMATION REFER TO THE MASTER CATALOG ON THE BURNDY WEBSITE.

REV	DATE	DESCRIPTION	ECO	BY	C'H'K.
AC	2023-06-28 00:00:00 EDT	UPDATED AS PER MARKUP	230627031433	YR	RA

TO ORDER BURNDY® PRODUCTS CALL

UNITED STATES:
1-800-346-4175 (LONDONDERRY, NH)

CANADA:
1-800-361-6975 (QUEBEC)
1-800-387-6487 (ALL OTHER PROVINCES)

FOR PRODUCT INFO: http://www.burndy.com

HYLUG™ COPPER (NARROW TONGUE)

ITEM NO:	N/A	
CAT. NO:	YA-L-NT-(TABLE)	
DRAWN BY:	AUGUSTIN.S	07/03/10
CHECKER:	--	--
DSN APPVL:	J MICHAUD	06/11/11
MFG APPVL:	T THRELFALL	06/23/11
QA APPVL:	T WATTS	06/13/11
MKT APPVL:	J SYLVIA	06/13/11
PROD FAM:	CM&R COMPRESSION	
PROJECT #:	--	
DOCUMENT TYPE:	Sales	
REL LEVEL:	Released	

SIZE: D

DRAWING NO: 30003952

REV: AC

SCALE: 1:1

SHEET 3 OF 12

REV: CREO 08/10/21

DRAWING NO. 30003952

CATALOG NUMBER	FIG. NO.	CONDUCTOR AWG	CONDUCTOR MM²	STUD HOLE SIZE	DIMENSIONS O.D.	B	C	D MIN.	E	K DIA.	L	N	T	INSTALLATION TOOLING DIELESS (# OF CRIMPS)	MECHANICAL MD6, OUR840, MD7-34R	HYDRAULIC BCT500HS, Y500CTHS	Y35, Y39, Y750, PAT750	Y46 PAT46	Y45	Y48	Y60	COLOR CODE	DIE INDEX	WIRE STRIP LENGTH
YA27L2NT14	2	3/0 AWG	--	1/4"	.62 [16]	1.00 [25]	.76 [19]	1.30 [33]	.63 [16]	.27 [7]	2.73 [69]	.31 [8]	.13 [3]	MY29-3(1) MY29-11(1) MRC840(2) Y644HS(1) Y81KFT(1) Y81KFTMBH(1) PAT81KFT-18V(1) PAT644 (1) PAT444 (1)	W27VT(2) W27RT(2) X27RT(3)	W27VT(2) W27RT(2) X27RT(3)	U27RT(1)	U27RT(1)	U27RT(1)	--	--	ORANGE	14	1-1/16"
YA27L2NT38	2			3/8"	.62 [16]	1.00 [25]	.60 [15]	1.74 [44]	1.00 [25]	.41 [10]	3.30 [84]	.41 [10]	.13 [3]											
YA27L2NT516	2			5/16"	.62 [16]	1.00 [25]	.60 [15]	1.73 [44]	1.00 [25]	.33 [8]	3.26 [83]	.31 [8]	.13 [3]											
YA28L2NT14	2	4/0 AWG	--	1/4"	.69 [18]	.88 [22]	.76 [19]	1.30 [33]	.63 [16]	.27 [7]	2.65 [67]	.31 [8]	.13 [3]		W27RT(2)	W28RT(2) X28RT(3)	U28RT(1)	U28RT(1)	U28RT(1)	C28R(1)	L28RT(1)	PURPLE	15	1-1/16"
YA29L2NT38	2	250 kcmil	--	3/8"	.75 [19]	1.00 [25]	.80 [20]	1.83 [47]	1.00 [25]	.41 [10]	3.43 [87]	.41 [10]	.16 [4]	MY29-3(1) MY29-11(1) Y644HS(1) Y81KFT(1) PAT444 (1) PAT81KFT-18V(1)	W29VT(2) X29RT(2)	W29VT(2) W29RT(2) X29RT(2)	U29RT(1)	U29RT(1)	U29RT(1)	C29R(1)	L29RT(1)	YELLOW	16	1-1/8"
YA29L2NT38E16	2			3/8"	.75 [19]	1.06 [27]	.80 [20]	1.83 [47]	1.75 [44]	.41 [10]	4.18 [106]	.41 [10]	.16 [4]											
YA31L2NT38	2	350 kcmil	185	3/8"	.88 [22]	1.06 [27]	.96 [24]	1.82 [46]	1.00 [25]	.41 [10]	3.51 [89]	.41 [10]	.18 [4]	Y644HS(1) Y81KFT(1) Y81KFTMBH(1) PAT81KFT-18V(1) PAT644 (1) PAT444 (1)	W31VT(2)	W31VT(2) W31RT(2)	U31RT(2) U29ART(2)	U31RT(2) U29ART(2)	U31RT(2) U29ART(2)	C31R(2) C29AR(2)	L31RT(1) L29ART(1)	RED	18	1-1/8"
YA31L2NT38E16	2			3/8"	.88 [22]	1.06 [27]	.88 [22]	2.59 [66]	1.75 [44]	.41 [10]	4.36 [111]	.41 [10]	.18 [4]											
YA31L2NNT	2			1/2"	.88 [22]	1.06 [27]	.88 [22]	3.00 [76]	1.75 [44]	.53 [13]	4.77 [121]	.63 [16]	.18 [4]											
YA34L2NT38	2	500 kcmil	240	3/8"	1.06 [27]	1.27 [32]	.96 [24]	1.82 [46]	1.00 [25]	.41 [10]	3.65 [93]	.41 [10]	.23 [6]		W34VT(4)	W34VT(4)	U34RT(2)	U34RT(2)	U34RT(2)	C34R(1)	L34RT(1)	BROWN	20 OR 22	1-7/16"
YA34L2NT38E16	2			3/8"	1.06 [27]	1.27 [32]	.96 [24]	2.58 [66]	1.75 [44]	.41 [10]	4.63 [117]	.41 [10]	.23 [6]											
YA34L2NT12E1	2			1/2"	1.06 [27]	1.27 [32]	.96 [24]	2.08 [53]	1.00 [25]	.53 [13]	4.13 [105]	.53 [13]	.23 [6]											
YA36L2NNT	2	600 kcmil	300	1/2"	1.19 [30]	1.38 [35]	1.12 [28]	3.00 [76]	1.75 [44]	.53 [13]	5.43 [138]	.63 [16]	.27 [16]		----	----	U36RT(2)	U36RT(2)	U36RT(2)	C36R(1)	L36RT(1)	GREEN	472	1-3/4"
YA39L2NT38	2	750 kcmil	--	3/8"	1.30 [33]	1.42 [36]	1.63 [41]	2.06 [52]	1.00 [25]	.41 [10]	4.34 [110]	.50 [13]	.27 [16]		----	----	U39RT(2)	U39RT(2)	U39RT(2)	C39R(1)	L39RT(1)	BLACK	24	1-1/2"
YA39L2NT38E16	2			3/8"	1.30 [33]	1.42 [36]	1.30 [33]	2.78 [71]	1.75 [44]	.41 [10]	5.11 [130]	.50 [13]	.27 [16]											
YA39L2NT12E1	2			1/2"	1.30 [33]	1.42 [36]	1.30 [33]	2.08 [53]	1.00 [25]	.53 [13]	4.42 [112]	.53 [13]	.27 [16]											

TOLERANCE BLOCK							
CONNECTOR SIZE	TOLERANCES						
	B	C	E	K DIA.	L	N	O.D.
-8C THRU -25	±.06	±.04	±.02	±.02	±.09	±.03	±.01
-26 THRU -34	±.08	±.04	±.02	±.02	±.12	±.03	±.01
-35 AND UP	±.09	±.06	±.02	±.02	±.15	±.06	±.01

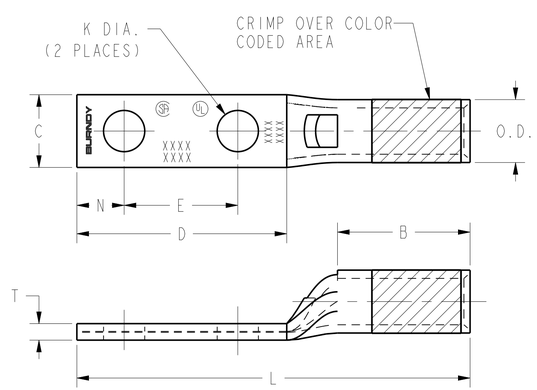

FIG.2

NOTES:

1. MATERIAL: COPPER TUBING.
2. FINISH: TIN PLATED.
3. DIMENSIONS IN BRACKETS [] ARE IN MILLIMETERS ROUNDED OFF TO THE NEAREST MILLIMETER, UNLESS OTHERWISE NOTED,AND ARE FOR REFERENCE ONLY.
4. INSTALLATION TOOLING AND DIES ARE CONSTANTLY BEING UPDATED. FOR THE LATEST INSTALLATION TOOLING INFORMATION REFER TO THE MASTER CATALOG ON THE BURNDY WEBSITE.

REV	DATE	DESCRIPTION	ECO	BY	C'H'K.
AC	2023-06-28 00:00:00 EDT	UPDATED AS PER MARKUP	230627031433	YR	RA

TO ORDER BURNDY® PRODUCTS CALL
UNITED STATES:
1-800-346-4175 (LONDONDERRY, NH)
CANADA:
1-800-361-6975 (QUEBEC)
1-800-387-6487 (ALL OTHER PROVINCES)
FOR PRODUCT INFO: http://www.burndy.com

HYLUG™ COPPER (NARROW TONGUE)

ITEM NO:	N/A	
CAT. NO:	YA-L-NT-(TABLE)	
DRAWN BY:	AUGUSTIN.S	07/03/10
CHECKER:	--	--
DSN APPVL:	J MICHAUD	06/11/11
MFG APPVL:	T THRELFALL	06/23/11
QA APPVL:	T WATTS	06/13/11
MKT APPVL:	J SYLVIA	06/13/11
PROD FAM:	CM&R COMPRESSION	
PROJECT #:	--	
DOCUMENT TYPE:	Sales	
REL LEVEL:	Released	

SIZE: D
DRAWING NO: 30003952
REV: AC
SCALE: 3:1
SHEET 4 OF 12

REV: CREQ 08/10/21

DRAWING NO. 30003952

CATALOG NUMBER	FIG. NO.	CONDUCTOR AWG	CONDUCTOR MM²	STUD HOLE SIZE	DIMENSIONS O.D.	B	C	D MIN.	K DIA.	L	N	T	INSTALLATION TOOLING DIELESS (# OF CRIMPS)	MECHANICAL MD6, OUR840, MD7-34R	HYDRAULIC BCT500HS, Y500CTHS	Y35, Y39, Y750, PAT750	Y46 PAT46	Y45	Y48	Y60	COLOR CODE	DIE INDEX	WIRE STRIP LENGTH
YAV4CLNT10FX	3	4 AWG CLASS B,C FLEX CLASS G,H,I,K,M DLO 105/24	---	#10	.38 [10]	.50 [13]	.41 [10]	.52 [13]	.21 [5]	1.32 [34]	.25 [6]	.09 [2]	MY29-11(1) Y1MRTC(2) Y81KFT(1) Y122CMR (2) PAT81KFT-18V(1)	W4CRT(1) X4CRT(1) W4CVT(1)	W4CRT(1) W4CVT(1) X4CRT(1)	U4CRT(1)	U4CRT(1)	U4CRT(1)	--	--	GRAY	8	1/2"
YAV2CLNT14FX	3	2 AWG CLASS B,C FLEX CLASS G,H,I,K,M DLO 150/24	35	1/4"	.46 [12]	.63 [16]	.46 [12]	.64 [16]	.27 [7]	1.71 [43]	.31 [8]	.10 [3]	Y1MRTC(2) MY29-11(1) Y81KFT(1) Y644(1) Y444(1)	W2CVT(1) W2CRT(1) X2CRT(1)	W2CVT(1) W2CRT(1) X2CRT(1)	U2CRT(1)	U2CRT(1)	U2CRT(1)	--	--	BROWN	10	11/16"
YAV2CLNT516FX	3			5/16"	.46 [12]	.63 [16]	.44 [11]	.70 [18]	.33 [8]	1.78 [45]	.34 [9]	.10 [3]											
YAV25LNT14FX	3	1/0 AWG CLASS B,C FLEX CLASS G,H,I,K,M DLO 275/24	50	1/4"	.56 [14]	.69 [18]	.67 [17]	.64 [16]	.27 [7]	1.75 [44]	.31 [8]	.12 [3]	MY29-11(1) Y81KFT(1) PAT81KFT(1) Y644(1) PAY644(1) Y444(1) PAT444(1)	W25VT(2) W25RT(2) X25RT(2)	W25VT(2) W25RT(2) X25RT(2)	U25RT(1)	U25RT(1)	U25RT(1)	--	--	PINK	12	11/16"
YAV25LNT516FX	3			5/16"	.56 [14]	.69 [18]	.67 [17]	.70 [18]	.33 [8]	1.81 [46]	.34 [9]	.12 [3]											
YAV25LNT38FX	3			3/8"	.56 [14]	.69 [18]	.76 [19]	.83 [21]	.41 [10]	1.94 [49]	.41 [10]	.13 [3]											
YAV26LNT516FX	3	2/0 AWG CLASS B,C FLEX CLASS G,H,I,K,M DLO 325/24	70	5/16"	.63 [16]	.81 [21]	.87 [22]	.70 [18]	.33 [8]	1.98 [50]	.34 [9]	.13 [3]		W26VT(2) W26RT(2) X26RT(2)	W26VT(2) W26RT(2) X26RT(2)	U26RT(1)	U26RT(1)	U26RT(1)	--	--	BLACK	13	13/16"
YAV26LNT38FX	3			3/8"	.63 [16]	.81 [21]	.87 [22]	.83 [21]	.41 [10]	2.11 [54]	.41 [10]	.13 [3]											
YAV26LNT12FX	3			1/2"	.63 [16]	.81 [21]	.87 [22]	1.08 [27]	.53 [13]	2.36 [60]	.53 [13]	.13 [3]											
YAV28LNT516FX	3	4/0 AWG CLASS B,C FLEX CLASS G,H,I,K,M DLO 550/24	---	5/16"	.77 [20]	1.03 [26]	.94 [24]	.70 [18]	.33 [8]	2.29 [58]	.34 [9]	.15 [4]		W28VT(2) W28RT(2) X28RT(3)	W28VT(2) W28RT(2) X28RT(3)	U28RT(1)	U28RT(1)	U28RT(1)	C28R(1)	L28RT(1)	PURPLE	15	1-1/16"
YAV28LNT38FX	3			3/8"	.77 [20]	1.03 [26]	.94 [24] / .76 [19]	.83 [21]	.41 [10]	2.42 [61]	.41 [10]	.15 [4]											
YAV28LENT38FX	3																						
YAV28LNT12FX	3			1/2"	.77 [20]	1.03 [26]	.76 [19]	1.08 [27]	.53 [13]	2.67 [68]	.53 [13]	.15 [4]											
YAV28LNT14FX	3			1/4"				.62 [16]	.27 [7]	2.23 [56]	.31 [8]												
YA30LNT516FX	3	250 FLEX (5) CLASS G: 259 STR CLASS H: 427 STR 4/0 FLEX CLASS I, 532 STR CLASS K, 2107 STR CLASS M, 5320 STR DLD, 550/24	---	5/16"	.81 [21]	1.03 [26]	.96 [24]	.72 [18]	.33 [8]	2.49 [63]	.34 [9]	.16 [4]	Y81KFT(1) PAT81KFT(1) Y644(1) PAY644(1) Y444(1) PAT444(1)	W29VT(2)	W29VT(1)	U29RT(1)	U29RT(1)	U29RT(1)	--	--	YELLOW	16	1-1/8"
YA30LNT38FX	3			3/8"				1.20 [30]	.41 [10]	2.97 [75]	.41 [10]												
YA31LNT12FX	3	250 FLEX DLO 650/24 CLASS I,K,M	150	1/2"	.88 [22]	1.06 [27]	.96 [24]	1.20 [30]	.53 [13]	2.75 [70]	.53 [13]	.18 [4]		W30VT(2)	W30VT(2) W30RT(2)	U30RT(2)	U30RT(2)	U30RT(2)	C30R(1)	L30RT(1)	WHITE	17	1-1/8"

TOLERANCE BLOCK							
CONNECTOR SIZE	TOLERANCES						
	B	C	E	K DIA.	L	N	O.D.
-8C THRU -25	±.06	±.04	±.02	±.02	±.09	±.03	±.01
-26 THRU -34	±.08	±.04	±.02	±.02	±.12	±.03	±.01
-35 AND UP	±.09	±.06	±.02	±.02	±.15	±.06	±.01

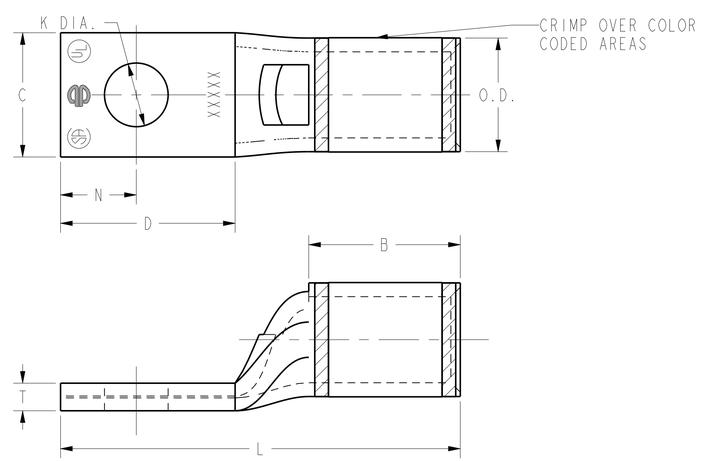

FIG.3

NOTES:

1. MATERIAL: COPPER TUBING.
2. FINISH: TIN PLATED.
3. DIMENSIONS IN BRACKETS [] ARE IN MILLIMETERS ROUNDED OFF TO THE NEAREST MILLIMETER, UNLESS OTHERWISE NOTED,AND ARE FOR REFERENCE ONLY.
4. INSTALLATION TOOLING AND DIES ARE CONSTANTLY BEING UPDATED. FOR THE LATEST INSTALLATION TOOLING INFORMATION REFER TO THE MASTER CATALOG ON THE BURNDY WEBSITE.
5. YA30LNT-FX IS NOT UL/CSA LISTED USING ANY CLASS OF 4/0 FLEX COPPER CONDUCTOR.

REV	DATE	DESCRIPTION	ECO	BY	C'H'K.
AC	2023-06-28 00:00:00 EDT	UPDATED AS PER MARKUP	230627031433	YR	RA

TO ORDER BURNDY® PRODUCTS CALL
UNITED STATES: 1-800-346-4175 (LONDONDERRY, NH)
CANADA: 1-800-361-6975 (QUEBEC) 1-800-387-6487 (ALL OTHER PROVINCES)
FOR PRODUCT INFO: http://www.burndy.com

HYLUG™ COPPER (NARROW TONGUE)

ITEM NO:	N/A	
CAT. NO:	YA-L-NT-(TABLE)	
DRAWN BY:	AUGUSTIN.S	07/03/10
CHECKER:	--	--
DSN APPVL:	J MICHAUD	06/11/11
MFG APPVL:	T THRELFALL	06/23/11
QA APPVL:	T WATTS	06/13/11
MKT APPVL:	J SYLVIA	06/13/11
PROD FAM:	CM&R COMPRESSION	
PROJECT #:	--	
DOCUMENT TYPE:	Sales	
REL LEVEL:	Released	

SIZE: D
DRAWING NO: 30003952
REV: AC
SCALE: 3:1
SHEET 5 OF 12

REV: CREO 08/10/21

DRAWING NO. 30003952

CATALOG NUMBER	FIG. NO.	CONDUCTOR AWG	CONDUCTOR MM²	STUD HOLE SIZE	DIMENSIONS O.D.	B	C	D MIN.	K DIA.	L	N	T	INSTALLATION TOOLING DIELESS (# OF CRIMPS)	MECHANICAL MD6, OUR840, MD7-34R	HYDRAULIC BCT500HS, Y500CTHS	Y35, Y39, Y750, PAT750	Y46 PAT46	Y45	Y48	Y60	COLOR CODE	DIE INDEX	WIRE STRIP LENGTH
YA32LNT516FX	3	313.1 kcmil 775/24 300 FLEX	185	5/16"	.95 [24]	1.19 [30]	.96 [24]	.70 [18]	.33 [8]	2.65 [65]	.34 [9]	.19 [5]	Y644HS(1) Y81KFT(1) Y81KFTMBH(1) PAT81KFT-18V(1) PAT644 (1) PAT444 (1)	W31VT(2)	W31VT(2) W31RT(2)	U31RT(2)	U31RT(2)	U31RT(2)	C31R(1)	L31RT(1)	RED	18	1-1/4"
YA32LNT38FX	3			3/8"	.95 [24]	1.19 [30]	.96 [24]	.83 [21]	.41 [10]	2.68 [68]	.41 [10]	.19 [5]											
YA32LNT12FX	3			1/2"	.95 [24]	1.19 [30]	.96 [24]	1.05 [27]	.52 [13]	2.93 [74]	.53 [13]	.19 [5]											
YA34LNT38FX	3	373.7 kcmil 925/24 350 FLEX	240	3/8"	1.06 [27]	1.27 [32]	.96 [24]	.85 [22]	.41 [10]	2.87 [73]	.41 [10]	.23 [6]	Y644HS(1) Y81KFT(1) Y81KFTMBH(1) PAT81KFT-18V(1) PAT644 (1) PAT444 (1)	W32VT(2)	W32VT(2) W32RT(2)	U32RT(2)	U32RT(2)	U32RT(2)	C32R(2)	L32RT(1)	BLUE	19	1-5/16"
YA34LNT12FX	3			1/2"	1.06 [27]	1.27 [32]	.96 [24]	1.10 [28]	.53 [13]	3.12 [79]	.53 [13]	.23 [6]											
YA38LNT12FX	3	535.3 kcmil 1325/24 500 FLEX	300	1/2"	1.25 [32]	1.45 [37]	1.63 [41]	1.08 [27]	.53 [13]	3.41 [87]	.53 [13]	.27 [7]	Y644HS(1) Y81KFT(1) Y81KFTMBH(1) PAT81KFT-18V(1) PAT644 (1) PAT444 (1)	---	---	U38XRT(2)	U38XRT(2)	U38XRT(2)	--	L38RT(1)	PINK	L99	1-7/16"
YA38LNTM20FX	3			M20	1.25 [32]	1.45 [37]	1.63 [41]	1.51 [38]	.85 [22]	3.84 [98]	.75 [19]	.27 [7]											
YA44LNT38FX	3	777.7 kcmil 1925/24 750 FLEX	500	3/8"	1.50 [38]	1.65 [42]	1.50 [38]	1.20 [30]	.41 [10]	3.79 [96]	.53 [13]	.33 [8]	Y644HS(1) Y81KFT(2) Y81KFTMBH(2) PAT81KFT-18V(2) PAT644 (1) PAT444 (1)	---	---	U44ZRT(2)	U44ZRT(2)	U44ZRT(2)	C44R(1)	L44RT(1)	YELLOW	L115	1-5/8"
YA44LNT12FX	3			1/2"	1.50 [38]	1.65 [42]	1.62 [41]	1.26 [32]	.56 [14]	3.98 [101]	.62 [16]	.33 [8]											
YA44LNT58FX	3			5/8"	1.50 [38]	1.65 [42]	1.50 [38]	1.30 [33]	.69 [18]	4.04 [103]	.66 [17]	.33 [8]											

TOLERANCE BLOCK

CONNECTOR SIZE	TOLERANCES B	C	E	K DIA.	L	N	O.D.
-8C THRU -25	±.06	±.04	±.02	±.02	±.09	±.03	±.01
-26 THRU -34	±.08	±.04	±.02	±.02	±.12	±.03	±.01
-35 AND UP	±.09	±.06	±.02	±.02	±.15	±.06	±.01

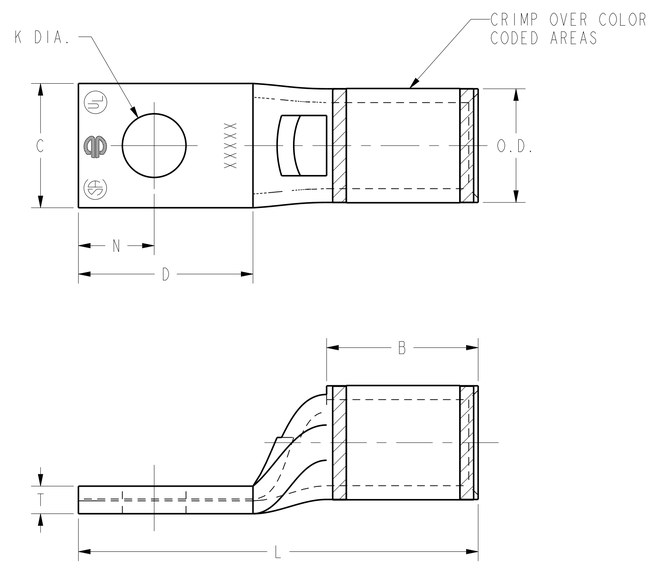

FIG.3

NOTES:

1. MATERIAL: COPPER TUBING.
2. FINISH: TIN PLATED.
3. DIMENSIONS IN BRACKETS [] ARE IN MILLIMETERS ROUNDED OFF TO THE NEAREST MILLIMETER, UNLESS OTHERWISE NOTED,AND ARE FOR REFERENCE ONLY.
4. INSTALLATION TOOLING AND DIES ARE CONSTANTLY BEING UPDATED. FOR THE LATEST INSTALLATION TOOLING INFORMATION REFER TO THE MASTER CATALOG ON THE BURNDY WEBSITE.

REV	DATE	DESCRIPTION	ECO	BY	C'H'K.
AC	2023-06-28 00:00:00 EDT	UPDATED AS PER MARKUP	230627031433	YR	RA

TO ORDER BURNDY® PRODUCTS CALL
UNITED STATES: 1-800-346-4175 (LONDONDERRY, NH)
CANADA: 1-800-361-6975 (QUEBEC) 1-800-387-6487 (ALL OTHER PROVINCES)
FOR PRODUCT INFO: http://www.burndy.com

HYLUG™ COPPER (NARROW TONGUE)

ITEM NO:	N/A	
CAT. NO:	YA-L-NT-(TABLE)	
DRAWN BY:	AUGUSTIN.S	07/03/10
CHECKER:	--	--
DSN APPVL:	J MICHAUD	06/11/11
MFG APPVL:	T THRELFALL	06/23/11
QA APPVL:	T WATTS	06/13/11
MKT APPVL:	J SYLVIA	06/13/11
PROD FAM:	CM&R COMPRESSION	
PROJECT #:	--	
DOCUMENT TYPE:	Sales	
REL LEVEL:	Released	

SIZE: D

DRAWING NO: 30003952 REV: AC

SCALE: 3:1

SHEET 6 OF 12

REV: CREO 08/10/21

DRAWING NO. 30003952

CATALOG NUMBER ⟨5⟩	FIG. NO.	CONDUCTOR AWG	CONDUCTOR MM²	STUD HOLE SIZE	DIMENSIONS O.D.	B	C	D MIN.	E	K DIA.	L	N	T	INSTALLATION TOOLING: DIELESS (# OF CRIMPS)	MECHANICAL: MD6, OUR840, MD7-34R	HYDRAULIC: BCT500HS, Y500CTHS	Y35, Y39, Y750, PAT750	Y46 PAT46	Y45	Y48	Y60	COLOR CODE	DIE INDEX	WIRE STRIP LENGTH
YAV29L2NT38FX	4	4/0 AWG 4/0 WELD 550/24	---	3/8"	.80 [20]	1.03 [26]	.94 [24]	1.84 [47]	1.00 [25]	.41 [10]	3.43 [87]	.41 [10]	.16 [4]	Y644 (1) PAT644 (1) PAT444 (1) Y81KFT (1) PAT81KFT (1)	W29VT(2) X29RT(4)	W29VT(2) W29RT(2) X29RT(4)	U29RT(1)	U29RT(1)	U29RT(1)	C29R(1)	L29RT(1)	YELLOW	16	1-1/16"
YA31L2NT38FX	4	250 FLEX 637/24 CLASS I,K,M	150	3/8"	.88 [22]	1.06 [27]	.96 [24]	1.84 [47]	1.00 [25]	.41 [10]	3.51 [89]	.41 [10]	.18 [4]		W30VT(2)	W30VT(2) W30RT(2)	U30RT(2)	U30RT(2)	U30RT(2)	C30R(2)	L30RT(1)	WHITE	17	1-1/8"
YA32L2NT38FX	4	313.1 kcmil 775/24 300 FLEX	185	3/8"	.95 [24]	1.19 [30]	.96 [24]	1.84 [47]	1.00 [25]	.41 [10]	3.69 [94]	.41 [10]	.20 [5]		W31VT(2)	W31VT(2) W31RT(2)	U31RT(2)	U31RT(2)	U31RT(2)	C31R(2)	L31RT(1)	RED	18	1-1/4"
YA34L2NT38FX	4	373.7 kcmil 925/24 350 FLEX	240	3/8"	1.06 [27]	1.27 [32]	.96 [24]	2.58 [66]	1.00 [25]	.41 [10]	3.88 [99]	.41 [10]	.23 [6]		W32VT(2)	W32VT(2) W32RT(2)	U32RT(2)	U32RT(2)	U32RT(2)	C32R(2)	L32RT(1)	BLUE	19	1-5/16"
YA36L2ENT38E10FX	4	444.4 kcmil 1100/24 450 FLEX	---	3/8"	1.19 [30]	1.38 [35]	1.50 [38]	2.30 [58]	1.25 [32]	.41 [10]	4.49 [114]	.50 [13]	.27 [7]		----	----	U34RT(2)	U34RT(2)	U34RT(2)	C34R(1)	L34RT(1)	BROWN	20	1-7/16"
YA36L2NT38FX	4			3/8"	1.19 [30]	1.38 [35]	1.63 [41]	2.03 [51]	1.00 [25]	.41 [10]	4.24 [108]	.50 [13]	.27 [7]											
YA38L2ENT38FX	4	535.3 kcmil 1325/24 500 FLEX	300	3/8"	1.25 [32]	1.45 [37]	1.50 [38]	2.03 [51]	1.00 [25]	.41 [10]	4.35 [110]	.50 [13]	.27 [7]		----	----	U38XRT(2)	U38XRT(2)	U38XRT(2)	--	L38RT(1)	PINK	L99	1-7/16"
YA38L2NT38FX	4			3/8"	1.25 [32]	1.45 [37]	1.63 [41]	2.03 [51]	1.00 [25]	.41 [10]	4.35 [110]	.50 [13]	.27 [7]											
YA38L2NNTFX	4			1/2"	1.25 [32]	1.45 [37]	1.63 [41]	3.03 [77]	1.75 [44]	.56 [14]	5.35 [136]	.63 [16]	.27 [7]											
YA40L2NNTFX	4	646 kcmil 1600/24 650 FLEX	400	1/2"	1.35 [34]	1.42 [36]	1.63 [41]	3.03 [77]	1.75 [44]	.56 [14]	5.38 [137]	.63 [16]	.30 [8]	Y644 (1) PAT644 (1) PAT444 (1) Y81KFT (2) PAT81KFT (2)	----	----	U39RT(2)	U39RT(2)	U39RT(2)	C39R(1)	L39RT(1)	BLACK	24	1-5/16"
YA44L2NNTFX	4	777.7 kcmil 1925/24 750 FLEX	500	1/2"	1.50 [38]	1.65 [42]	1.63 [41]	3.03 [77]	1.75 [44]	.56 [14]	5.74 [146]	.63 [16]	.33 [8]		----	----	U44XRT(2)	U44XRT(2)	U44XRT(2)	C44R(1)	L44RT(1)	YELLOW	L115	1-5/8"
YA44L2NT38FX	4			3/8"	1.50 [38]	1.65 [42]	1.63 [41]	2.03 [51]	1.00 [25]	.41 [10]	4.74 [120]	.50 [13]	.33 [8]											
YA45L2NT38FX	4	929 kcmil 2300/24	---	3/8"	1.69 [43]	2.00 [51]	1.70 [43]	2.02 [51]	1.00 [25]	.41 [10]	5.18 [132]	.50 [13]	.38 [10]	----	----	----	----	P44RT(2)	S44RT(2)	C44R(1)	L44RT(1)	WHITE	27	2-1/16"

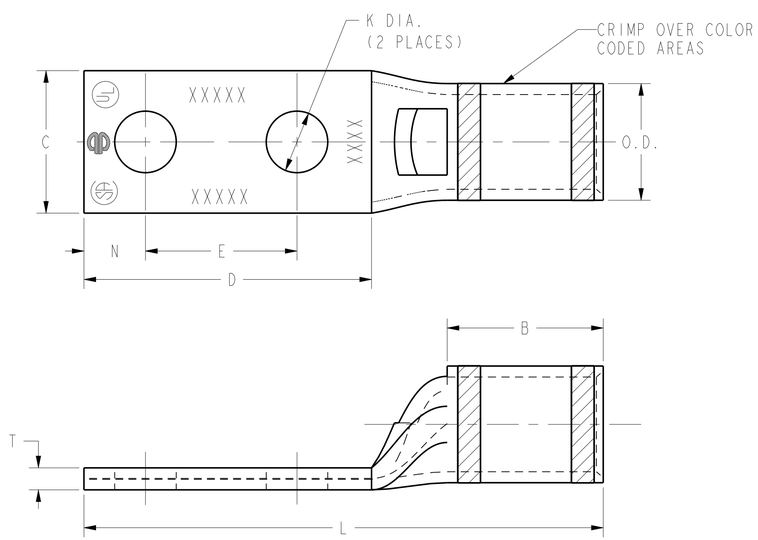

FIG.4

TOLERANCE BLOCK							
CONNECTOR SIZE	TOLERANCES B	C	E	K DIA.	L	N	O.D.
-8C THRU -25	±.06	±.04	±.02	±.02	±.09	±.03	±.01
-26 THRU -34	±.08	±.04	±.02	±.02	±.12	±.03	±.01
-35 AND UP	±.09	±.06	±.02	±.02	±.15	±.06	±.01

NOTES:

1. MATERIAL: COPPER TUBING.
2. FINISH: TIN PLATED.
3. DIMENSIONS IN BRACKETS [] ARE IN MILLIMETERS ROUNDED OFF TO THE NEAREST MILLIMETER, UNLESS OTHERWISE NOTED,AND ARE FOR REFERENCE ONLY.
4. INSTALLATION TOOLING AND DIES ARE CONSTANTLY BEING UPDATED. FOR THE LATEST INSTALLATION TOOLING INFORMATION REFER TO THE MASTER CATALOG ON THE BURNDY WEBSITE.

⟨5⟩ ADD SUFFIX "NK" FOR NICKEL PLATING AND "SV" FOR SILVER PLATING.

REV	DATE	DESCRIPTION	ECO	BY	C'H'K.
AC	2023-06-28 00:00:00 EDT	UPDATED AS PER MARKUP	230627031433	YR	RA

TO ORDER BURNDY® PRODUCTS CALL

UNITED STATES:
1-800-346-4175 (LONDONDERRY, NH)

CANADA:
1-800-361-6975 (QUEBEC)
1-800-387-6487 (ALL OTHER PROVINCES)

FOR PRODUCT INFO: http://www.burndy.com

HYLUG™ COPPER (NARROW TONGUE)

ITEM NO: N/A
CAT. NO: YA-L-NT-(TABLE)
DRAWN BY: AUGUSTIN.S 07/03/10
CHECKER: -- --
DSN APPVL: J MICHAUD 06/11/11
MFG APPVL: T THRELFALL 06/23/11
QA APPVL: T WATTS 06/13/11
MKT APPVL: J SYLVIA 06/13/11
SCALE: 3:1
PROD FAM: CM&R COMPRESSION
PROJECT #: --
DOCUMENT TYPE: Sales
REL LEVEL: Released
SIZE: D
DRAWING NO: 30003952
REV: AC
SHEET 7 OF 12

REV: CREO 08/10/21

DRAWING NO. 30003952

CATALOG NUMBER	FIG. NO.	CONDUCTOR AWG	CONDUCTOR MM²	STUD HOLE SIZE	DIMENSIONS O.D.	B	C	D MIN.	E	K DIA.	L	N	T	INSTALLATION TOOLING DIELESS (# OF CRIMPS)	MECHANICAL MD6, OUR840, MD7-34R	HYDRAULIC BCT500HS, Y500CTHS	Y35, Y39, Y750 PAT750	Y46 PAT46	Y45	Y48	Y60	COLOR CODE	DIE INDEX	WIRE STRIP LENGTH
YAV4CL2NT10E1FX	4	#4 AWG #4 WELD 91/24 105/24	---	#10	.38 [10]	.50 [13]	.41 [10]	1.52 [37]	1.00 [25]	.21 [5]	2.33 [59]	.25 [6]	.09 [2]	Y122CMR (2) MY29-11(1) Y1MRTC(2) Y81KFT(1) Y81KFTMBH(1) PAT81KFT-18V(1)	W4CVT(1) W4CRT(1) X4CRT(1)	W4CVT(1) W4CRT(1) X4CRT(1)	U4CRT(1)	U4CRT(1)	U4CRT(1)	--	--	GRAY	8	9/16"
YAV4CL2NT10E2FX	4				.38 [10]	.50 [13]	.41 [10]	1.52 [37]	.75 [19]	.21 [5]	2.08 [53]	.25 [6]	.09 [2]											
YAV4CL2NT10FX	4				.38 [10]	.50 [13]	.41 [10]	1.15 [29]	.63 [16]	.21 [5]	1.95 [50]	.25 [6]	.09 [2]											
YAV4CL2NT14FX	4			1/4"	.38 [10]	.50 [13]	.45 [11]	1.26 [32]	.63 [16]	.27 [7]	2.08 [53]	.31 [8]	.09 [2]											
YAV2CL2NT10FX	4	#2 AWG #2 WELD 125/24 150/24	35	#10	.46 [12]	.63 [16]	.48 [12]	1.15 [29]	.63 [16]	.21 [5]	2.14 [54]	.25 [6]	.10 [3]	Y122CMR (2) MY29-11(1) Y1MRTC(2) Y81KFT(1) PAT644 (1) PAT81KFT-18V(1) PAT444 (1)	W2CVT(1) W2CRT(1) X2CRT(1)	W2CVT(1) W2CRT(1) X2CRT(1)	U2CRT(1)	U2CRT(1)	U2CRT(1)	--	--	BROWN	10	11/16"
YAV2CL2NT14E1FX	4			1/4"	.46 [12]	.63 [16]	.48 [12]	1.65 [42]	1.00 [25]	.27 [7]	2.63 [67]	.31 [8]	.10 [3]											
YAV2CL2NT14FX	4				.46 [12]	.63 [16]	.48 [12]	1.28 [33]	.63 [16]	.27 [7]	2.26 [57]	.31 [8]	.10 [3]											
YAV1CL2NT14FX	4	#1 AWG #1 WELD 175/24 225/24	---	1/4"	.51 [13]	.62 [16]	.50 [13]	1.28 [33]	.63 [16]	.27 [7]	2.28 [58]	.31 [8]	.12 [3]	MY2911 (1) Y81KFT (1) PAT81KFT (1) Y644 (1) PAT644 (1) PAT444 (1)	W1CVT(1) W1CRT-1(1) X1CRT-1(1)	W1CVT(1) W1CRT-1(1) X1CRT-1(1)	U1CRT-1(1)	U1CRT-1(1)	U1CRT-1(1)	--	--	GREEN	11	11/16"
YAV1CL2NT516FX	4			5/16"	.51 [13]	.63 [16]	.58 [15]	1.70 [43]	1.00 [25]	.33 [8]	2.72 [69]	.34 [9]	.12 [3]											
YAV25L2NT14E1FX	4	1/0 AWG 1/0 WELD 275/24	50	1/4"	.56 [14]	.69 [18]	.64 [16]	1.65 [42]	1.00 [25]	.27 [7]	2.76 [70]	.31 [8]	.12 [3]		W25VT(2) W25RT(2) X25RT(2)	W25VT(2) W25RT(2) X25RT(2)	U25RT(1)	U25RT(1)	U25RT(1)	--	--	PINK	12	11/16"
YAV25L2NT14FX	4			1/4"	.56 [14]	.69 [18]	.64 [16]	1.28 [33]	.63 [16]	.27 [7]	2.39 [61]	.31 [8]	.12 [3]											
YAV25L2NT516FX	4			5/16"	.56 [14]	.69 [18]	.58 [15]	1.71 [44]	1.00 [25]	.33 [8]	2.82 [72]	.34 [9]	.12 [3]											
YAV26L2NT14FX	4	2/0 AWG 2/0 WELD 325/24	70	1/4"	.63 [16]	.81 [21]	.76 [19]	1.28 [33]	.63 [16]	.27 [7]	2.56 [65]	.31 [8]	.13 [3]		W26VT(2) W26RT(2) X26RT(2)	W26VT(2) W26RT(2) X26RT(2)	U26RT(1)	U26RT(1)	U26RT(1)	--	--	BLACK	13	13/16"
YAV26L2NT516FX	4			5/16"	.63 [16]	.81 [21]	.58 [15]	1.71 [44]	1.00 [25]	.33 [8]	2.99 [76]	.34 [9]	.13 [3]											
YAV26L2NT38FX	4			3/8"	.63 [16]	.81 [21]	.63 [16]	1.84 [47]	1.00 [25]	.41 [10]	3.23 [82]	.41 [10]	.13 [9]											
YAV28L2ENT14FX	4	4/0 AWG 4/0 WELD 550/24	---	1/4"	.77 [20]	1.03 [19]	.76 [19]	1.28 [33]	.63 [16]	.27 [7]	2.86 [73]	.31 [8]	.15 [4]		W28VT(2) W28RT(2) X28RT(3)	W28VT(2) W28RT(2) X28RT(3)	U28RT(1)	U28RT(1)	U28RT(1)	C28R(1)	L28RT(1)	PURPLE	15	1-1/16"
YAV28L2NT38FX	4			3/8"	.77 [20]	1.03 [19]	.94 [24]	1.84 [47]	1.00 [25]	.40 [10]	3.43 [87]	.41 [10]	.15 [4]											

TOLERANCE BLOCK

CONNECTOR SIZE	TOLERANCES B	C	E	K DIA.	L	N	O.D.
-8C THRU -25	±.06	±.04	±.02	±.02	±.09	±.03	±.01
-26 THRU -34	±.08	±.04	±.02	±.02	±.12	±.03	±.01
-35 AND UP	±.09	±.06	±.02	±.02	±.15	±.06	±.01

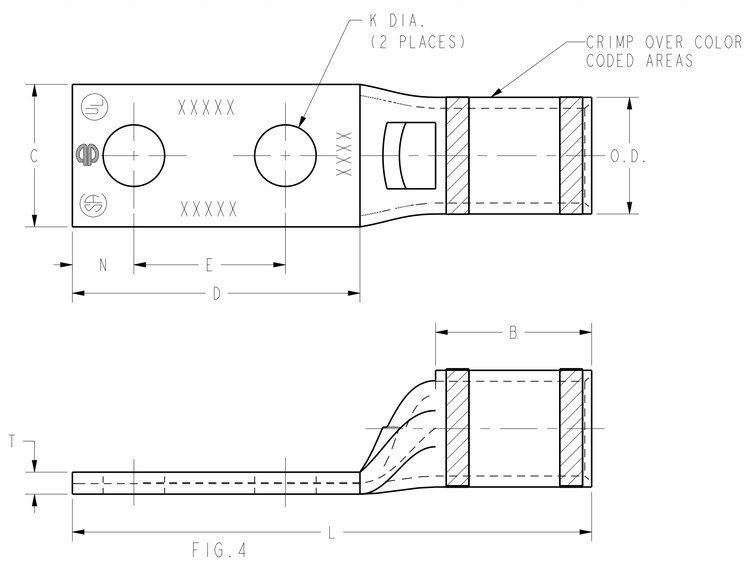

FIG.4

NOTES:

1. MATERIAL: COPPER TUBING.
2. FINISH: TIN PLATED.
3. DIMENSIONS IN BRACKETS [] ARE IN MILLIMETERS ROUNDED OFF TO THE NEAREST MILLIMETER, UNLESS OTHERWISE NOTED, AND ARE FOR REFERENCE ONLY.
4. INSTALLATION TOOLING AND DIES ARE CONSTANTLY BEING UPDATED. FOR THE LATEST INSTALLATION TOOLING INFORMATION REFER TO THE MASTER CATALOG ON THE BURNDY WEBSITE.

REV	DATE	DESCRIPTION	ECO	BY	C'H'K.
AC	2023-06-28 00:00:00 EDT	UPDATED AS PER MARKUP	230627031433	YR	RA

TO ORDER BURNDY® PRODUCTS CALL
UNITED STATES: 1-800-346-4175 (LONDONDERRY, NH)
CANADA: 1-800-361-6975 (QUEBEC) 1-800-387-6487 (ALL OTHER PROVINCES)
FOR PRODUCT INFO: http://www.burndy.com

HYLUG™ COPPER (NARROW TONGUE)

ITEM NO:	N/A
CAT. NO:	YA-L-NT-(TABLE)
DRAWN BY:	AUGUSTIN.S 07/03/10
CHECKER:	-- --
DSN APPVL:	J MICHAUD 06/11/11
MFG APPVL:	T THRELFALL 06/23/11
QA APPVL:	T WATTS 06/13/11
MKT APPVL:	J SYLVIA 06/13/11
PROD FAM:	CM&R COMPRESSION
PROJECT #:	--
DOCUMENT TYPE:	Sales
REL LEVEL:	Released

HUBBELL® BURNDY®

SCALE: 3:1

SIZE	DRAWING NO	REV
D	30003952	AC

SHEET 8 OF 12

REV: CREQ 08/10/21

CATALOG NUMBER	FIG. NO.	CONDUCTOR AWG	CONDUCTOR MM²	STUD HOLE SIZE	DIMENSIONS O.D.	B	C	D MIN.	E	K DIA.	L	N	T	INSTALLATION TOOLING DIELESS (# OF CRIMPS)	MECHANICAL MD6, OUR840, MD7-34R	HYDRAULIC BCT500HS, Y500CTHS	Y35, Y39, Y750, PAT750	Y46 PAT46	Y45	Y48	Y60	COLOR CODE	DIE INDEX	WIRE STRIP LENGTH
YAZV4C2NTI4E2FX	5	#4 AWG #4 WELD 9I/24 I05/24	---	I/4"	.38 [I0]	I.25 [32]	.44 [II]	I.40 [36]	.75 [I9]	.27 [7]	2.95 [75]	.3I [8]	.09 [2]	YIMRTC(4) MY29-II(2) YI22CMR (2) Y8IKFT(I) Y8IKFTMBH(I) PAT8IKFT-I8V(I)	W4CVT(2) W4CRT(2) X4CRT(2)	W4CVT(2) W4CRT(2) X4CRT(2)	U4CRT(2)	U4CRT(2)	U4CRT(2)	--	--	GRAY	8	I-5/I6"
YAZV2C2NTI4E2FX	5	#2 AWG #2 WELD I25/24 I50/24	35	I/4"	.46 [I2]	I.38 [35]	.50 [I3]	I.40 [36]	.75 [I9]	.27 [7]	3.I4 [80]	.3I [8]	.I0 [3]	YIMRTC(4) MY29-II(4) Y644HS(I) Y8IKFT(I) YI22CMR (2) PAT8IKFT-I8V(I)	W2CVT(2) W2CRT(2) X2CRT(2)	W2CVT(2) W2CRT(2) X2CRT(2)	U2CRT(2)	U2CRT(2)	U2CRT(2)	--	--	BROWN	I0	I-7/I6"
YAZV282NT38FX	5	4/0 AWG 4/0 WELD 550/24	---	3/8"	.77 [20]	I.62 [4I]	.94 [24]	I.84 [47]	I.00 [25]	.40 [I0]	3.96 [I0I]	.4I [I0]	.I7 [20]	MY29II (I) Y644 (I) PAT644 (I) PAT444 (I) Y8IKFT (I) PAT8IKFT (I)	W28VT(4) W28RT(4) X28RT(6)	W28VT(4) W28RT(4) X28RT(6)	U28RT(2)	U28RT(2)	U28RT(2)	C28R(I)	L28RT(I)	PURPLE	I5	I-II/I6"
YAZV292NT5I6FX	5	4/0 FLEX CLASS I,K,M	---	5/I6"	.80 [20]	2.00 [5I]	.96 [24]	I.7I [44]	I.00 [25]	.33 [8]	4.28 [I09]	.34 [9]	.I6 [4]		W29VT(4) X29RT(8)	W29RT(4) W29VT(4) X29RT(8)	U29RT(2)	U29RT(2)	U29RT(2)	C29R(I)	L29RT(I)	YELLOW	I6	2-I/I6"
YAZ342NT38FX	5	373.7 kcmil .925/24 350 FLEX	240	3/8"	I.06 [27]	2.25 [57]	.96 [24]	I.84 [47]	I.00 [25]	.40 [I0]	4.85 [I23]	.4I [I0]	.23 [6]	Y644 (I) PAT644 (I) PAT444 (I) Y8IKFT (I) PAT8IKFT (I)	W32VT(4)	W32VT(4) W32RT(4)	U32RT(4)	U32RT(4)	U32RT(4)	C32R(2)	L32RT(2)	BLUE	I9	2-5/I6"
YAZ382ENT38FX	5	535.3 kcmil I325/24 500 FLEX	300	3/8"	I.25 [32]	2.8I [7I]	I.46 [37]	2.02 [5I]	I.00 [25]	.4I [I0]	5.72 [I45]	.50 [I3]	.27 [7]		----	----	U38XRT(4)	U38XRT(4)	U38XRT(4)	C38R(2)	L38RT(2)	PINK	L99	2-7/8"

TOLERANCE BLOCK

CONNECTOR SIZE	TOLERANCES B	C	E	K DIA.	L	N	O.D.
-8C THRU -25	±.06	±.04	±.02	±.02	±.09	±.03	±.0I
-26 THRU -34	±.08	±.04	±.02	±.02	±.I2	±.03	±.0I
-35 AND UP	±.09	±.06	±.02	±.02	±.I5	±.06	±.0I

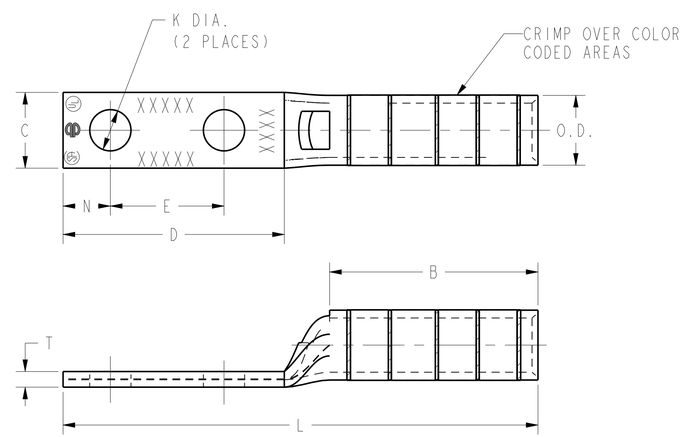

FIG.5

NOTES:

1. MATERIAL: COPPER TUBING.
2. FINISH: TIN PLATED.
3. DIMENSIONS IN BRACKETS [] ARE IN MILLIMETERS ROUNDED OFF TO THE NEAREST MILLIMETER, UNLESS OTHERWISE NOTED,AND ARE FOR REFERENCE ONLY.
4. INSTALLATION TOOLING AND DIES ARE CONSTANTLY BEING UPDATED. FOR THE LATEST INSTALLATION TOOLING INFORMATION REFER TO THE MASTER CATALOG ON THE BURNDY WEBSITE.

REV	DATE	DESCRIPTION	ECO	BY	C'H'K.
AC	2023-06-28 00:00:00 EDT	UPDATED AS PER MARKUP	230627031433	YR	RA

TO ORDER BURNDY® PRODUCTS CALL
UNITED STATES:
I-800-346-4I75 (LONDONDERRY, NH)
CANADA:
I-800-36I-6975 (QUEBEC)
I-800-387-6487 (ALL OTHER PROVINCES)
FOR PRODUCT INFO: http://www.burndy.com

HYLUG™ COPPER (NARROW TONGUE)

ITEM NO:	N/A	
CAT. NO:	YA-L-NT-(TABLE)	
DRAWN BY:	AUGUSTIN.S	07/03/I0
CHECKER:	--	--
DSN APPVL:	J MICHAUD	06/II/II
MFG APPVL:	T THRELFALL	06/23/II
QA APPVL:	T WATTS	06/I3/II
MKT APPVL:	J SYLVIA	06/I3/II
PROD FAM:	CM&R COMPRESSION	
PROJECT #:	--	
DOCUMENT TYPE:	Sales	
REL LEVEL:	Released	

SIZE: D
DRAWING NO: 30003952
REV: AC
SCALE: 3:I
SHEET 9 OF I2

REV: CREQ 08/10/21

DRAWING NO. 30003952

CATALOG NUMBER	FIG. NO.	CONDUCTOR AWG	CONDUCTOR MM²	STUD HOLE SIZE	DIMENSIONS O.D.	B	C	D MIN.	E	K DIA.	L	N	T	INSTALLATION TOOLING DIELESS (# OF CRIMPS)	MECHANICAL MD6, OUR840, MD7-34R	HYDRAULIC BCT500HS, Y500CTHS	Y35, Y39, Y750, PAT750	Y46 PAT46	Y45	Y48	Y60	COLOR CODE	DIE INDEX	WIRE STRIP LENGTH
YAZ382NNTFX	5	535.3 kcmil 1325/24 500 FLEX	300	1/2"	1.25 [32]	2.81 [71]	1.62 [41]	3.02 [77]	1.75 [44]	.56 [14]	6.72 [171]	.62 [16]	.27 [7]	Y644 (1) PAT644 (1) PAT444 (1) Y81KFT (1) PAT81KFT (1)	----	----	U38XRT(4)	U38XRT(4)	U38XRT(4)	--	L38RT(2)	PINK	L99	2-7/8"
YAZ382NT38FX	5	535.3 kcmil 1325/24 500 FLEX	300	3/8"	1.25 [32]	2.81 [71]	1.62 [41]	2.03 [51]	1.00 [25]	.41 [10]	5.72 [145]	.50 [13]	.27 [7]		----	----	U38XRT(4)	U38XRT(4)	U38XRT(4)	--	L38RT(2)	PINK	L99	2-7/8"
YAZ442NT38FX	5	777.7 kcmil 1925/24 750 FLEX	500	3/8"	1.50 [38]	3.00 [76]	1.62 [41]	2.03 [51]	1.00 [25]	.40 [10]	6.09 [155]	.50 [13]	.33 [8]	PAT644 (1) PAT444 (1) Y81KFT (2) PAT81KFT (2)	----	----	U44XRT(4)	U44XRT(4)	U44XRT(4)	C44RT(2)	L44RT(2)	YELLOW	L115	3-1/16"

TOLERANCE BLOCK							
CONNECTOR SIZE	TOLERANCES						
	B	C	E	K DIA.	L	N	O.D.
-8C THRU -25	±.06	±.04	±.02	±.02	±.09	±.03	±.01
-26 THRU -34	±.08	±.04	±.02	±.02	±.12	±.03	±.01
-35 AND UP	±.09	±.06	±.02	±.02	±.15	±.06	±.01

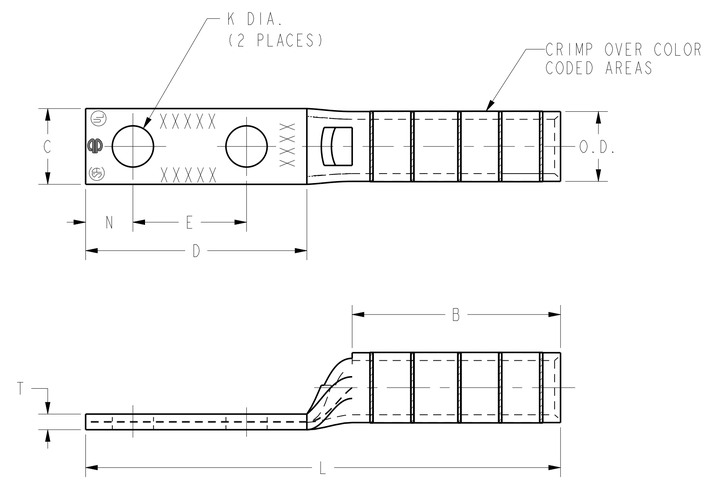

FIG. 5

NOTES:

1. MATERIAL: COPPER TUBING.
2. FINISH: TIN PLATED.
3. DIMENSIONS IN BRACKETS [] ARE IN MILLIMETERS ROUNDED OFF TO THE NEAREST MILLIMETER, UNLESS OTHERWISE NOTED, AND ARE FOR REFERENCE ONLY.
4. INSTALLATION TOOLING AND DIES ARE CONSTANTLY BEING UPDATED. FOR THE LATEST INSTALLATION TOOLING INFORMATION REFER TO THE MASTER CATALOG ON THE BURNDY WEBSITE.

REV	DATE	DESCRIPTION	ECO	BY	C'H'K.
AC	2023-06-28 00:00:00 EDT	UPDATED AS PER MARKUP	230627031433	YR	RA

TO ORDER BURNDY® PRODUCTS CALL

UNITED STATES:
1-800-346-4175 (LONDONDERRY, NH)

CANADA:
1-800-361-6975 (QUEBEC)
1-800-387-6487 (ALL OTHER PROVINCES)

FOR PRODUCT INFO: http://www.burndy.com

HYLUG™ COPPER (NARROW TONGUE)

ITEM NO:	N/A	
CAT. NO:	YA-L-NT-(TABLE)	
DRAWN BY:	AUGUSTIN.S	07/03/10
CHECKER:	--	--
DSN APPVL:	J MICHAUD	06/11/11
MFG APPVL:	T THRELFALL	06/23/11
QA APPVL:	T WATTS	06/13/11
MKT APPVL:	J SYLVIA	06/13/11
PROD FAM:	CM&R COMPRESSION	
PROJECT #:	--	
DOCUMENT TYPE:	Sales	
REL LEVEL:	Released	

SIZE: D

DRAWING NO: 30003952

REV: AC

SCALE: 3:1

SHEET 10 OF 12

REV: CREQ 08/10/21

DRAWING NO. 30003952

CATALOG NUMBER	FIG. NO.	CONDUCTOR AWG	CONDUCTOR MM²	STUD HOLE SIZE	DIMENSIONS O.D.	B	C	D MIN.	E	K DIA.	L	N	T	INSTALLATION TOOLING DIELESS (# OF CRIMPS)	MECHANICAL MD6, OUR840, MD7-34R	HYDRAULIC BCT500HS, Y500CTHS	Y35, Y39, Y750, PAT750	Y46 PAT46	Y45	Y48	Y60	COLOR CODE	DIE INDEX	WIRE STRIP LENGTH
YAZ442NNT	6	1000 kcmil	500	1/2"	1.50 [38]	3.00 [76]	1.62 [41]	3.08 [78]	1.75 [44]	.56 [14]	7.08 [180]	.65 [17]	.33 [8]	Y644 (1) PAT444 (1) Y81KFT (3) PAT81KFT (3)	----	----	----	P44RT(4)	S44RT(4)	C44R(2)	L44RT(2)	WHITE	27	3-1/16"

TOLERANCE BLOCK							
CONNECTOR SIZE	TOLERANCES						
	B	C	E	K DIA.	L	N	O.D.
-8C THRU -25	±.06	±.04	±.02	±.02	±.09	±.03	±.01
-26 THRU -34	±.08	±.04	±.02	±.02	±.12	±.03	±.01
-35 AND UP	±.09	±.06	±.02	±.02	±.15	±.06	±.01

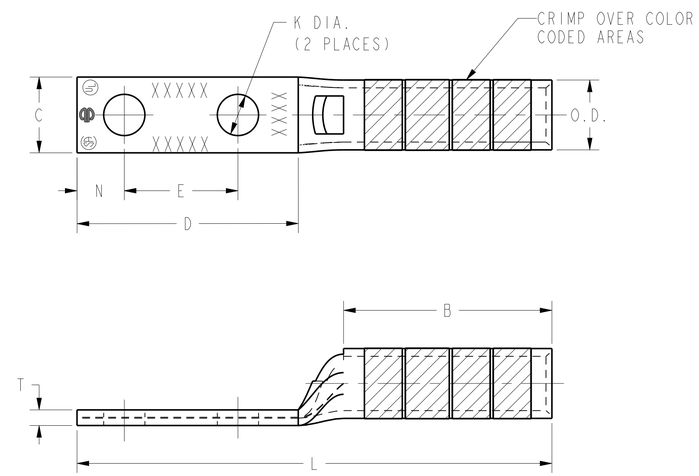

FIG.6

NOTES:

1. MATERIAL: COPPER TUBING.
2. FINISH: TIN PLATED.
3. DIMENSIONS IN BRACKETS [] ARE IN MILLIMETERS ROUNDED OFF TO THE NEAREST MILLIMETER, UNLESS OTHERWISE NOTED,AND ARE FOR REFERENCE ONLY.
4. INSTALLATION TOOLING AND DIES ARE CONSTANTLY BEING UPDATED. FOR THE LATEST INSTALLATION TOOLING INFORMATION REFER TO THE MASTER CATALOG ON THE BURNDY WEBSITE.

REV	DATE	DESCRIPTION	ECO	BY	C'H'K.
AC	2023-06-28 00:00:00 EDT	UPDATED AS PER MARKUP	230627031433	YR	RA

TO ORDER BURNDY® PRODUCTS CALL
UNITED STATES:
1-800-346-4175 (LONDONDERRY, NH)
CANADA:
1-800-361-6975 (QUEBEC)
1-800-387-6487 (ALL OTHER PROVINCES)
FOR PRODUCT INFO: http://www.burndy.com

HYLUG™ COPPER (NARROW TONGUE)

ITEM NO:	N/A	
CAT. NO:	YA-L-NT-(TABLE)	
DRAWN BY:	AUGUSTIN.S	07/03/10
CHECKER:	--	--
DSN APPVL:	J MICHAUD	06/11/11
MFG APPVL:	T THRELFALL	06/23/11
QA APPVL:	T WATTS	06/13/11
MKT APPVL:	J SYLVIA	06/13/11
PROD FAM:	CM&R COMPRESSION	
PROJECT #:	--	
DOCUMENT TYPE:	Sales	
REL LEVEL:	Released	

SIZE: D
SCALE: 2:1
DRAWING NO: 30003952
REV: AC
SHEET 11 OF 12

REV: CREQ 08/10/21

DRAWING NO. 30003952

CATALOG NUMBER	FIG. NO.	CONDUCTOR AWG	CONDUCTOR MM²	STUD HOLE SIZE	DIMENSIONS O.D.	B	C	D MIN.	H REF.	K DIA.	L	N	T	INSTALLATION TOOLING DIELESS (# OF CRIMPS)	MECHANICAL MD6, OUR840, MD7-34R	HYDRAULIC BCT500HS, Y500CTHS	Y35, Y39, Y750, PAT750	Y46 PAT46	Y45	Y48	Y60	COLOR CODE	DIE INDEX	WIRE STRIP LENGTH
YA32LNT3890	1	400 kcmil	--	3/8" [M10]	.95 [24]	1.19 [30]	.96 [24]	.85 [26]	2.19 [56]	.41 [10]	1.45 [37]	.41 [10]	.19 [5]	Y644HS (1) Y81KFT(2) PAT444 (1) PAT81KFT-18V (2)	W32VT(4)	----	U32RT(2)	U32RT(2)	U32RT(2)	C32R(1)	L32RT(1)	BLUE	19 OR 470	1-1/4"

TOLERANCE BLOCK							
CONNECTOR SIZE	TOLERANCES						
	B	C	E	K DIA.	L	N	O.D.
-8C THRU -25	±.06	±.04	±.02	±.02	±.09	±.03	±.01
-26 THRU -34	±.08	±.04	±.02	±.02	±.12	±.03	±.01
-35 AND UP	±.09	±.06	±.02	±.02	±.15	±.06	±.01

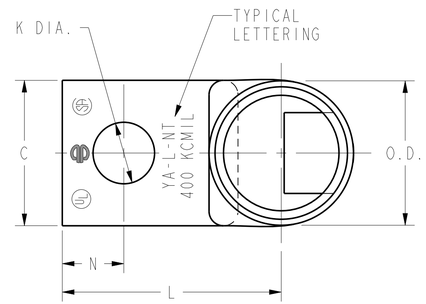

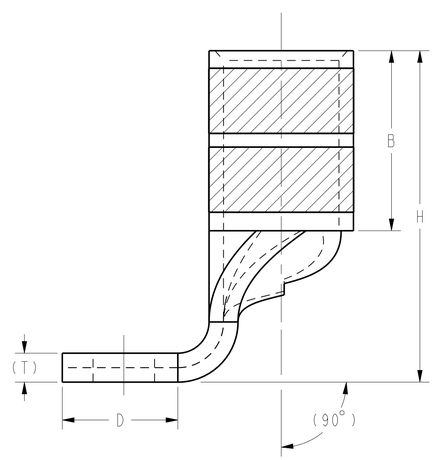

FIG. 1.

NOTES:

1. MATERIAL: COPPER TUBING.
2. FINISH: TIN PLATED.
3. DIMENSIONS IN BRACKETS [] ARE IN MILLIMETERS ROUNDED OFF TO THE NEAREST MILLIMETER, UNLESS OTHERWISE NOTED, AND ARE FOR REFERENCE ONLY.
4. INSTALLATION TOOLING AND DIES ARE CONSTANTLY BEING UPDATED. FOR THE LATEST INSTALLATION TOOLING INFORMATION REFER TO THE MASTER CATALOG ON THE BURNDY WEBSITE.

REV	DATE	DESCRIPTION	ECO	BY	C'H'K.
AC	2023-06-28 00:00:00 EDT	UPDATED AS PER MARKUP	230627031433	YR	RA

TO ORDER BURNDY® PRODUCTS CALL
UNITED STATES: 1-800-346-4175 (LONDONDERRY, NH)
CANADA: 1-800-361-6975 (QUEBEC) 1-800-387-6487 (ALL OTHER PROVINCES)
FOR PRODUCT INFO: http://www.burndy.com

HYLUG™ COPPER (NARROW TONGUE)

ITEM NO:	N/A	
CAT. NO:	YA-L-NT-(TABLE)	
DRAWN BY:	AUGUSTIN.S	07/03/10
CHECKER:	--	--
DSN APPVL:	J MICHAUD	06/11/11
MFG APPVL:	T THRELFALL	06/23/11
QA APPVL:	T WATTS	06/13/11
MKT APPVL:	J SYLVIA	06/13/11
PROD FAM:	CM&R COMPRESSION	
PROJECT #:	--	
DOCUMENT TYPE:	Sales	
REL LEVEL:	Released	

SCALE: 2:1
SIZE: D
DRAWING NO: 30003952
REV: AC
SHEET 12 OF 12

REV.: CREQ 08/10/21