NOTES:

1. DIMENSIONS ARE IN INCHES [MILLIMETERS].
2. "C" SUFFIX INDICATES EPOXY COATED SHIELD.
3. B–313496 & C ARE SUPPLIED WITH:
   - (4) 1/2–13 x .75 [19.1] SOCKET HEAD CAP SCREWS (STAINLESS STEEL).
   - (4) 1/2–13 X 1.75 [44.5] SOCKET HEAD CAP SCREWS (STAINLESS STEEL).
   - (8) HI–COLLAR LOCK WASHERS (STAINLESS STEEL).
4. B–313496–N & NC ARE SUPPLIED WITH:
   - (4) 1/2–13 X .75 [19.1] SOCKET HEAD NYLOC CAP SCREWS (STAINLESS STEEL).
   - (4) 1/2–13 X 1.75 [44.5] SOCKET HEAD NYLOC CAP SCREWS (STAINLESS STEEL).

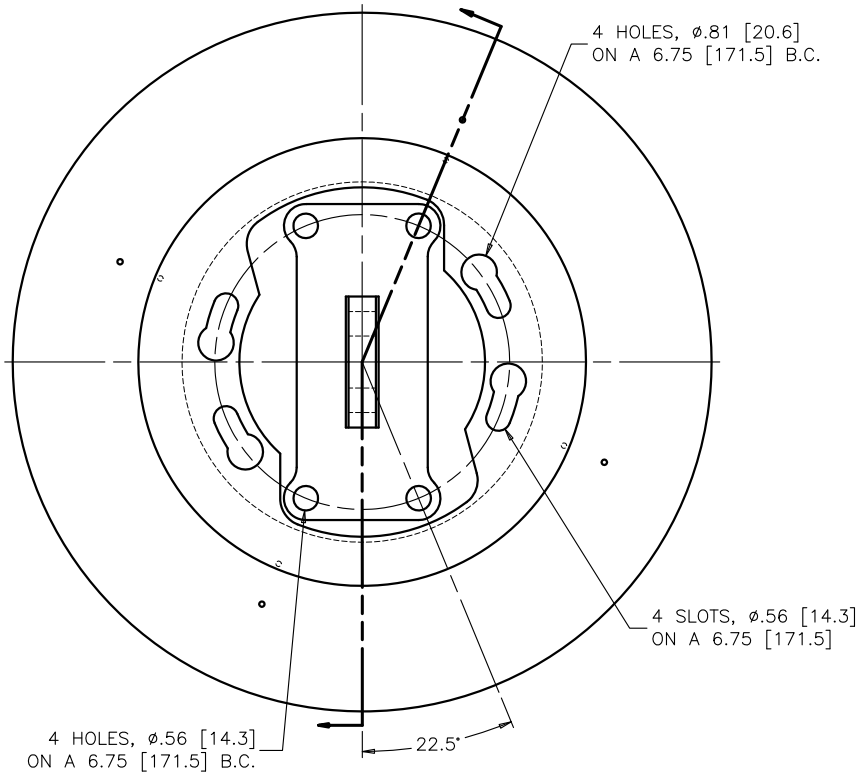

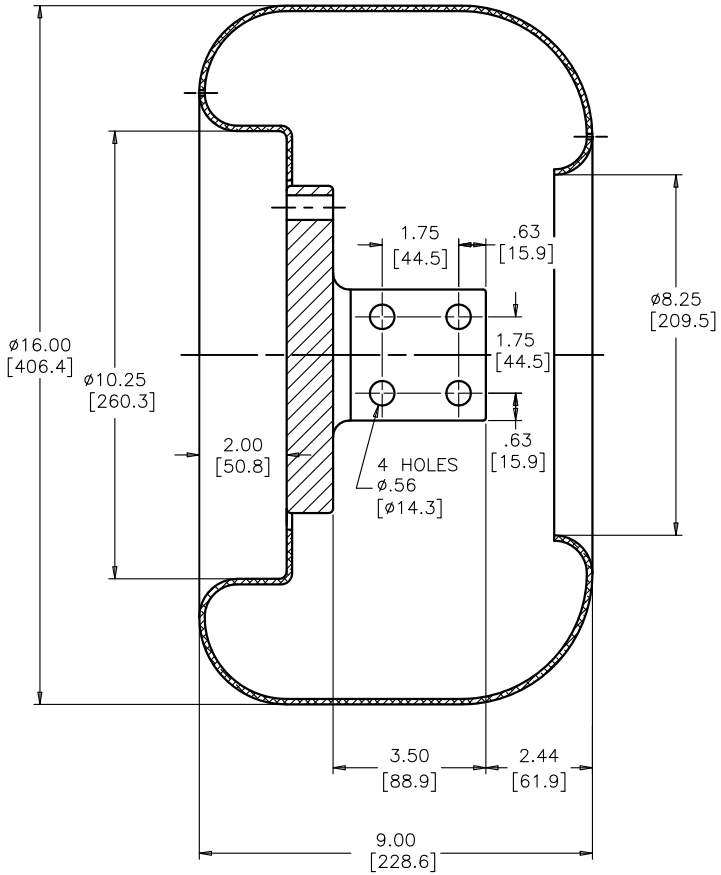

SECTION

REVISION	DATE
REVISED NOTES	5–5–14
ADDED SLOTS & ø.81 HOLES, CENTER OPENING WAS RECTANGULAR	12–5–16

HUBBELL PCORE ELECTRIC

PART No. SDB–313496, C, N & NC

TITLE SHIELD AND TERMINAL ASSEMBLY WITH NYLOC CAP SCREWS

DATE 4–3–14 SCALE 1/3

REF. FOR BUSHINGS WITH FLAT ONE–PIECE BOTTOM END CAPS

NOTE TO PURCHASER:
ALL SALES OF PCORE PRODUCTS ARE SUBJECT TO OUR STANDARD TERMS AND CONDITIONS AND THE LIMITED WARRANTIES THEREUNDER