NOTES:

1	CREEPAGE DISTANCE:	27.1" / 688mm
2	ARC DISTANCE:	10.6" / 269mm
3	NOMINAL VOLTAGE:	15kV
4	NOMINAL CURRENT:	2000A
5	VOLTAGE WITHSTAND, 60 sec.:	50kV
6	BIL:	110kV
7	ROUTINE TEST ACCORDING TO:	CSA C88.1-96
8	MAX. TORQUE APPLIED ON FLANGE BOLTS:	40 lbf · ft / 54.2 N · m
9	WEIGHT:	64 lb / 29.0 Kg

REVISIONS

ZONE	REV.	DESCRIPTION	DRAWN BY	DATE	APPR.
A1	A	UPDATE DRAWING & MODEL NUMBER TO CURRENT STANDARD	J. CLICHE	2012-01-25	Y.V.
C6 B6 A2 B4	B	INCREASE THE TOLERANCES ON THE FLANGE OUTSIDE DIAMETER. ADD THE MINIMUM GASKET SEAT DIMENSION. ADD THE "SDC" DESIGNATION TO THE BUSHING NAME. THE FLANGE S-4976-4437 IS REPLACED BY THE FLANGE S-4894-4272	J. CLICHE	2016-10-31	Y.V.

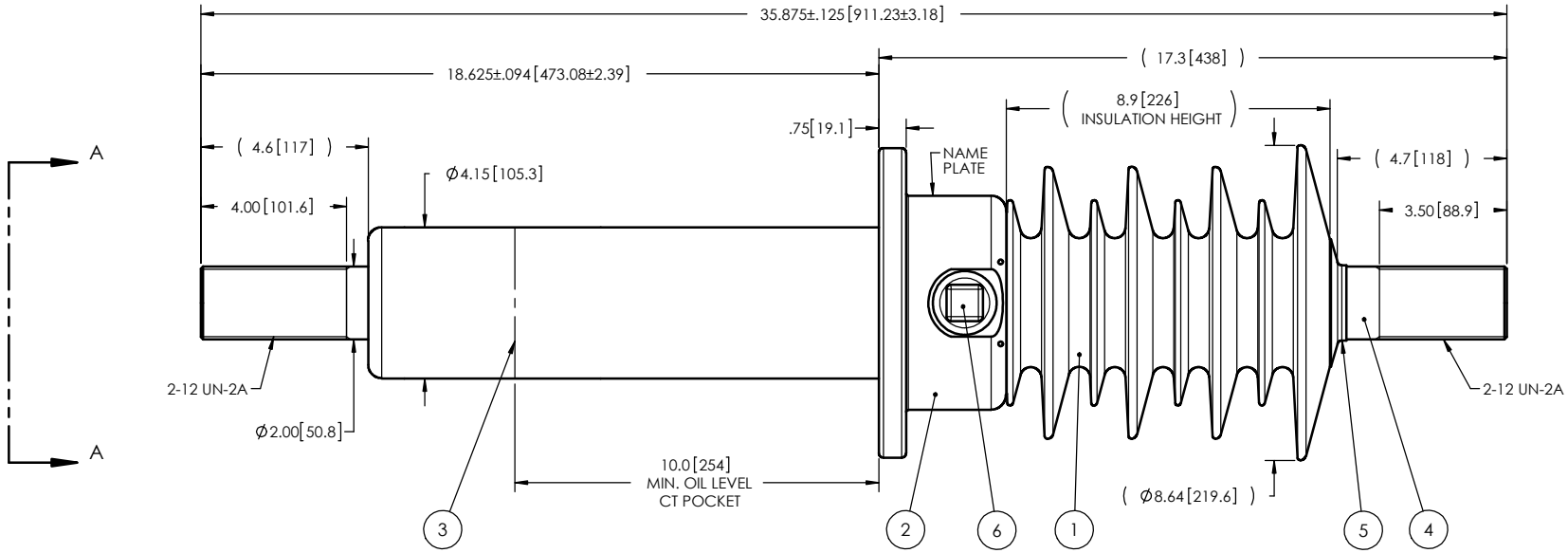

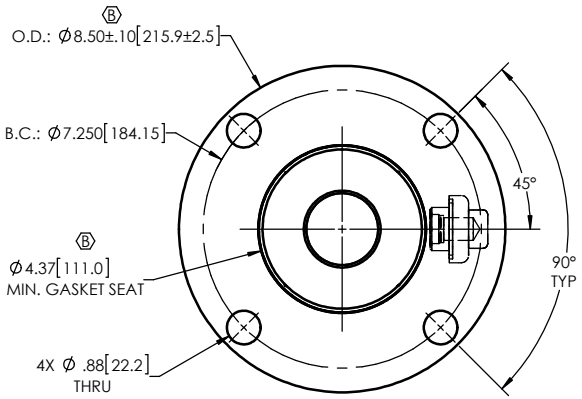

VIEW A-A

ITEM NO.	QTY	DRAWING NO.	PART NO.	DESCRIPTION	NOTE / MAT'L
6	1	S-1001-2022		CAPACITANCE TAP ASSEMBLY	ALUMINUM
5	1	S-1344-0162-0		CAP	COPPER
4	1	S-4976-4439		ROD ASSEMBLY	COPPER
3	1	S-4976-4438		SHIELD ASSEMBLY	COPPER
B 2	1	S-4894-4272		FLANGE	ALUMINUM
1	1	S-4976-4385	-001	CASTING, CYCLOALIPHATIC RESIN	EC-APG-02

PARTS LIST

GENERAL TOLERANCES
(UNLESS OTHERWISE SPECIFIED)

X.	±0.125
.X	±0.094
.XX	±0.063
.XXX	±0.031
ANGLES	±0.25°
RADIUS	±0.031

REMOVE BURRS AND BREAK SHARP EDGES

DIMENSIONS ARE IN INCHES
(UNLESS OTHERWISE SPECIFIED)

DRAWN BY: I. LÉVEILLÉ — DATE: 2007/09/26
CHECK BY: J. Veneffa ing. — 2016/11/01
PROJECT MANAGER:

Electro Composites™
solid HV bushings solution

TITLE: B SDC® BUSHING 15kV, 2000A A
MODEL: 110-020-T-342-00

FORMAT	CAGE CODE	DRAWING NO.	REVISION
A		S-4976-4385	B

SCALE: 1:5 — GENERATED BY: SolidWorks 2013 — SHEET: 1 of 1

This drawing is the proprietary property of Electro Composites (2008) ULC, not part of the public domain, and is issued with the express understanding and agreement that it is not to be reproduced or copied in whole or in part or issued for furnishing information to others, or used directly or indirectly, in any way detrimental to the interest of Electro Composites (2008) ULC and is to be returned upon request by Electro Composites (2008) ULC. All Rights Reserved.