NOTES:

1	CREEPAGE DISTANCE:	72.9" / 1854mm (D)
2	ARC DISTANCE:	29.5" / 750mm
3	NOMINAL VOLTAGE:	69kV
4	NOMINAL CURRENT:	400/1200A
5	VOLTAGE WITHSTAND, 60 sec.:	160kV
6	BIL:	350kV
7	ROUTINE TEST ACCORDING TO:	IEEE C57.19.01
8	MAX. TORQUE APPLIED ON FLANGE BOLTS:	40 lb · ft / 54.2 N · m
9	WEIGHT:	104 lb / 47.2 kg

10 SILVER PLATED, AS PER ASTM B700, TYPE 1, GRADE D, CLASS N, NO NICKEL LAYER, FROM 13 TO 20 µm THICKNESS

REVISIONS

ZONE	REV.	DESCRIPTION	DRAWN BY	DATE	APPR.
A2	A	ADD REPLACE 6912C37	J.N. PILOTTE	2009-02-10	J.V.
A2 --- B4 A2 C6	B	REMOVE: "REPLACE MODEL#..." UPDATE DRAWING TO NEW STANDARDS THE THREADED TERMINAL CHANGE FROM S-1001-4593 TO S-5595-5338-1 ADD THE "SDC" DESIGNATION TO THE BUSHING NAME ADD THE "MINIMUM GASKET SPACE" DIMENSION.	J. CLICHE	2014-09-25	J.V.
	C	THE CONFIGURATION OF THE SHIELD ASSEMBLY HAS BEEN CHANGED.	A.SAVARD	2019-08-16	J.V.
D2, F5	D	ADD SHEDS, INCREASE CREEPAGE AND ARC DISTANCE ACCORDINGLY	M. FORGET	2024-10-01	J.V.

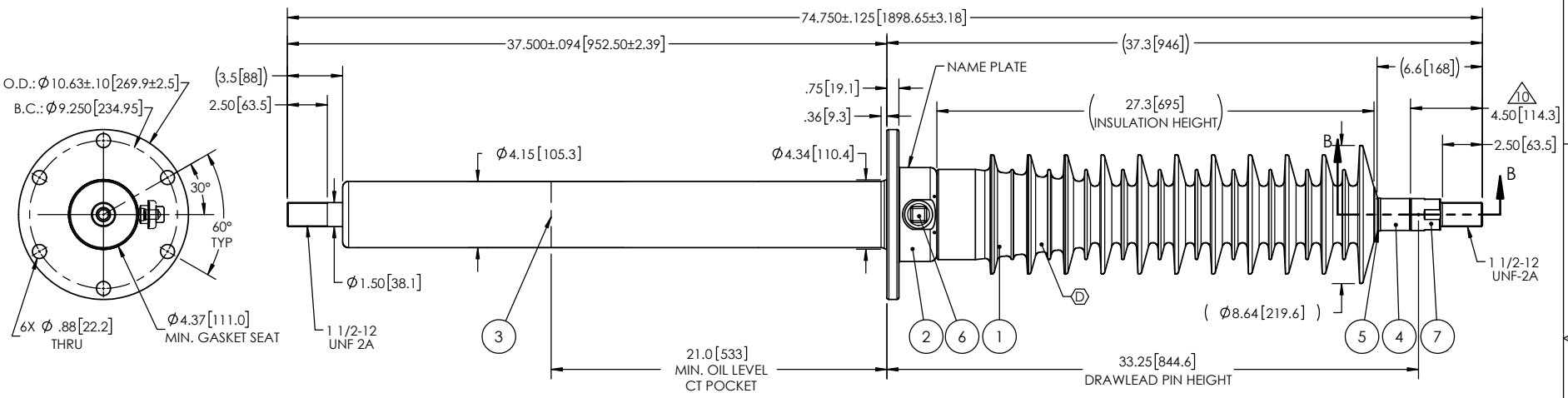

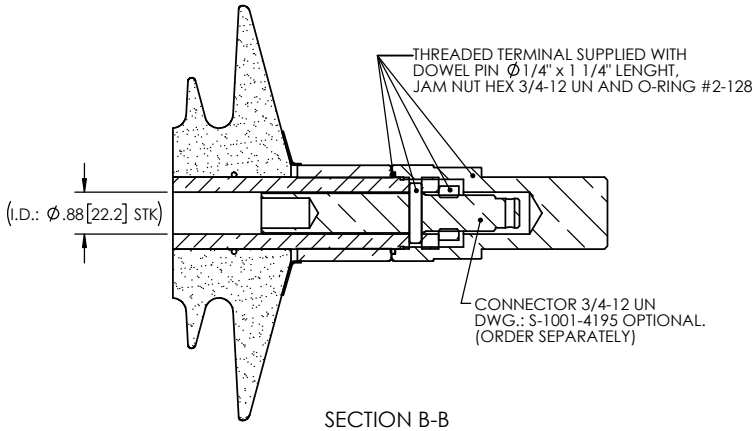

SECTION B-B
SCALE 1 : 4

ITEM NO.	QTY	DRAWING NO.	PART NO.	DESCRIPTION	NOTE / MAT'L
7	1	S-5595-5338	S-5595-5338-1	THREADED TERMINAL KIT	COPPER
6	1	S-1001-2022		CAPACITANCE TAP ASSEMBLY	ALUMINUM
5	1	S-1344-0162	S-1344-0162-0	CAP	COPPER
4	1	S-5172-4706		TUBE ASSEMBLY	COPPER
3	1	S-4396-3573		SHIELD ASSEMBLY	COPPER
2	1	S-5172-4704		FLANGE	ALUMINUM
1	1	S-5172-4703	-001	CASTING, CYCLOALIPHATIC RESIN	EC-APG-02

PARTS LIST

GENERAL TOLERANCES (UNLESS OTHERWISE SPECIFIED)

X.	±0.125
.X	±0.094
.XX	±0.063
.XXX	±0.031
ANGLES	±0.25°
RADIUS	±0.031

REMOVE BURRS AND BREAK SHARP EDGES

DIMENSIONS ARE IN INCHES (UNLESS OTHERWISE SPECIFIED)

DRAWN BY: I. LÉVEILLÉ — DATE: 2008/02/26
CHECK BY:
PROJECT ENG.: G. Vanier P.Eng. — 2024-10-02
PROJECT MANAGER:

Electro Composites™
solid HV bushings solution

TITLE:
SDC® BUSHING, 69kV, 400/1200A
MODEL: 350-412-I-386-00

FORMAT	CAGE CODE	DRAWING NO.	REVISION
A		S-5172-4703	D

SCALE 1:10 — GENERATED BY: SolidWorks 2023 — SHEET 1 of 1

This drawing is the proprietary property of Electro Composites (2008) ULC, not part of the public domain, and is issued with the express understanding and agreement that it is not to be reproduced or copied in whole or in part or issued for furnishing information to others, or used directly or indirectly, in any way detrimental to the interest of Electro Composites (2008) ULC and is to be returned upon request by Electro Composites (2008) ULC. All Rights Reserved.