NOTES:

1	CREEPAGE DISTANCE:	19.70" / 500.38mm
2	ARC DISTANCE:	9.39" / 238.51mm
3	NOMINAL VOLTAGE:	15 kV
4	NOMINAL CURRENT:	400A
5	WITHSTAND VOLTAGE AT 60 sec.:	50kV
6	B.I.L. :	110kV
7	APPLICATION STANDARD:	IEEE C57.19.01
8	MAX. TORQUE APPLIED ON FLANGE BOLTS:	40 lbf x ft
9	WEIGHT:	36.80 lbs / 16.66 Kg

REVISIONS

ZONE	REV.	DESCRIPTION	DATE	DRAWN BY	APPR

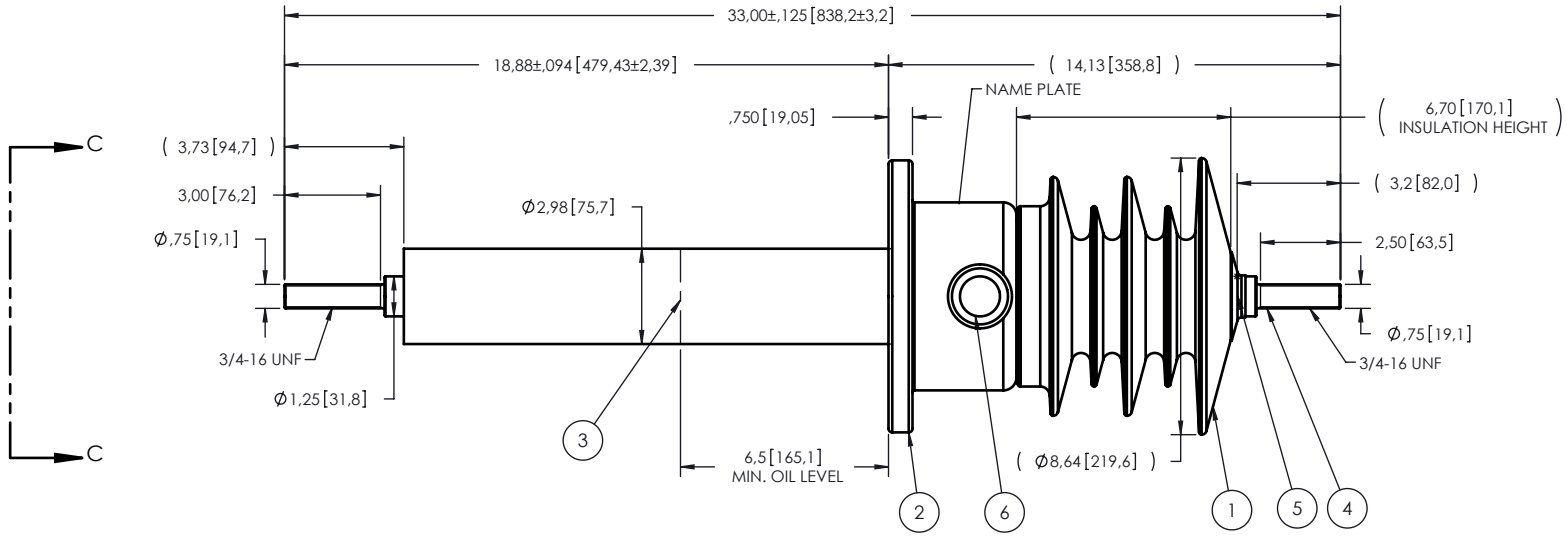

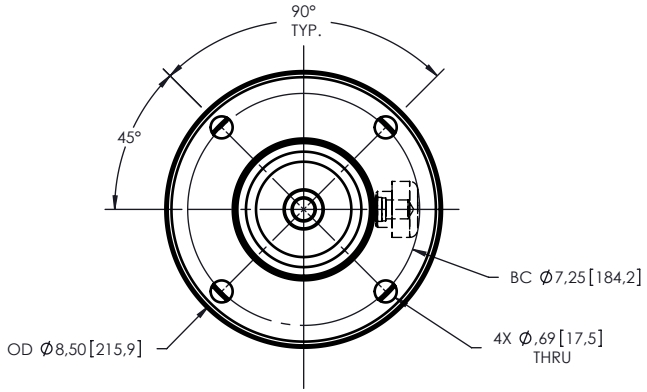

SECTION C-C

ITEM NO.	QTY	DRAWING NO.	PART NO.	DESCRIPTION	NOTE / MAT'L
6	1	S-1001-2022		CAPACITANCE TAP ASSEMBLY	ALUMINUM
5	1	S-1016-0008		CAP	COPPER
4	1	S-5755-5453		ROD ASSEMBLY	COPPER
3	1	S-5755-5452		SHIELD ASSEMBLY	COPPER
2	1	S-5755-5470		FLANGE	ALUMINUM
1	1	S-5755-5451		CASTING, CYCLOALIPHATIC RESIGN	EC-APG-02

PARTS LIST

GENERAL TOLERANCES (UNLESS OTHERWISE SPECIFIED)

X.	±0.125
.X	±0.094
.XX	±0.063
.XXX	±0.010
ANGLES	±0.1°
RADIUS	±0.031

REMOVE BURRS AND BREAK SHARP EDGES

DIMENSIONS ARE IN INCHES (UNLESS OTHERWISE SPECIFIED)

REPLACE:

DRAWN BY: A.SAVARD DATE: 2009/07/24

CHECK BY:

PROJECT ING.:

PROJECT MANAGER:

ElectroComposites™
solid HV bushings solution

TITLE:
BUSHING 15 kV, 400A
MODEL: 110-004-T-493-00

FORMAT	CAGE CODE	DRAWING NO.	REVISION
A		S-5755-5451	NR

SCALE 1:6 | GENERETED BY: SolidWorks 2008 | SHEET 1 of 1

This drawing is the proprietary property of Electro Composites (2008) ULC, not part of the public domain, and is issued with the express understanding and agreement that it is not to be reproduced or copied in whole or in part or issued for furnishing information to others, or used directly or indirectly, in any way detrimental to the interest of Electro Composites (2008) ULC and is to be returned upon request by Electro Composites (2008) ULC. All Rights Reserved.