REV	DATE	DESCRIPTION	ECO	BY	C'H'K.
A	10/30/2012	RELEASE SALES DRAWINGS OF THE AFFECTED ITEMS	29187	MS	MB

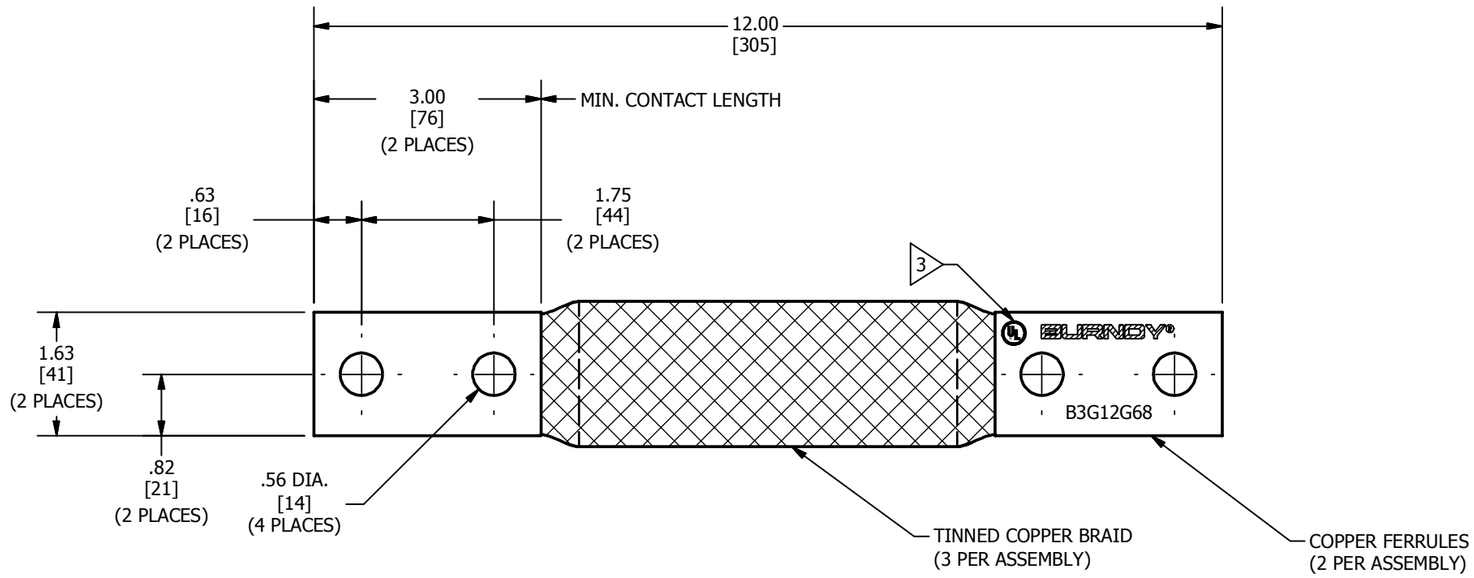

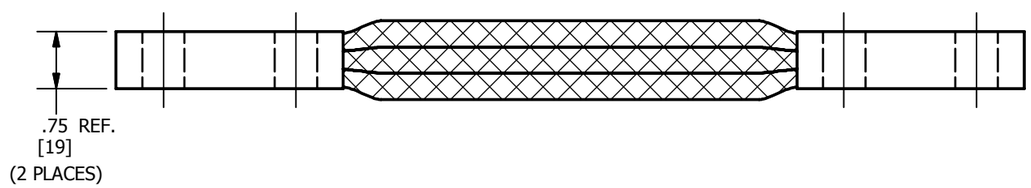

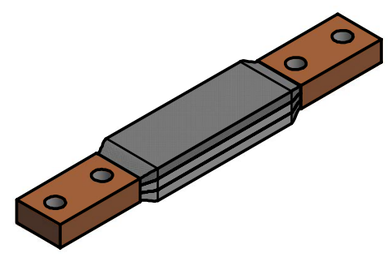

NOTES:

1. APPROXIMATE AMP RATING: 960A INDOOR, 1150A OUTDOOR. THIS RATING MAY VARY WITH AMBIENT CONDITIONS, ORIENTATION OF THE BRAID, AND OTHER SERVICE CONDITIONS.

2. DIMENSIONS IN BRACKETS [ ] ARE IN MILLIMETERS ROUNDED OFF TO THE NEAREST MILLIMETER, UNLESS OTHERWISE NOTED, AND ARE FOR REFERENCE ONLY.

3 LISTED TO UL 467 GROUNDING & BONDING EQUIPMENT STANDARDS.

TO ORDER BURNDY® PRODUCTS CALL

UNITED STATES
1-800-346-4175 (LONDONDERRY, NH)

CANADA:
1-800-361-6975 (QUEBEC)
1-800-387-6487 (ALL OTHER PROVINCES)

FOR PRODUCT INFO: http://www.burndy.com

FLEXIBLE COPPER BRAID

ITEM NO: 50009707

CAT. NO: B3G12G68

DRAWN BY: V KAMAL	10/11/2012	
CHECKER: T REYNOLDS	12/07/2012	
DSN APRVL: R CRUZ	12/06/2012	
MFG APRVL: --		
QA APRVL: J MEDINA	12/07/2012	
MKT APRVL: K ROBICHEAU	12/07/2012	
PROD FAM: MECHANICAL GROUNDING		
PROJECT #: --		
DOCUMENT TYPE: SALES		
REL LEVEL: Released		

BURNDY®

SIZE	DRAWING NO	REV
B	50009709	A
	SHEET 1 OF 1	