REV	DATE	DESCRIPTION	ECO	BY	C'H'K.
A	05/11/2016	FOCUS REQUEST FPN1605023	43809	ARJ	MB

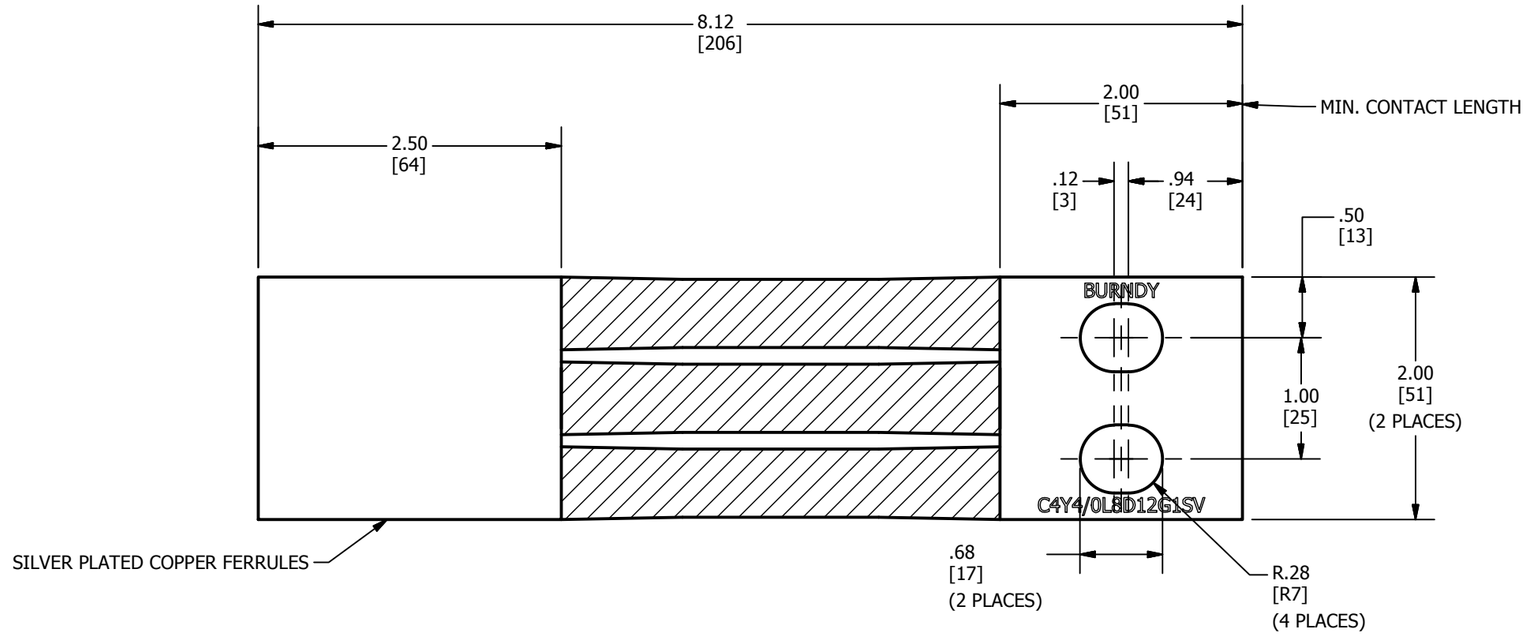

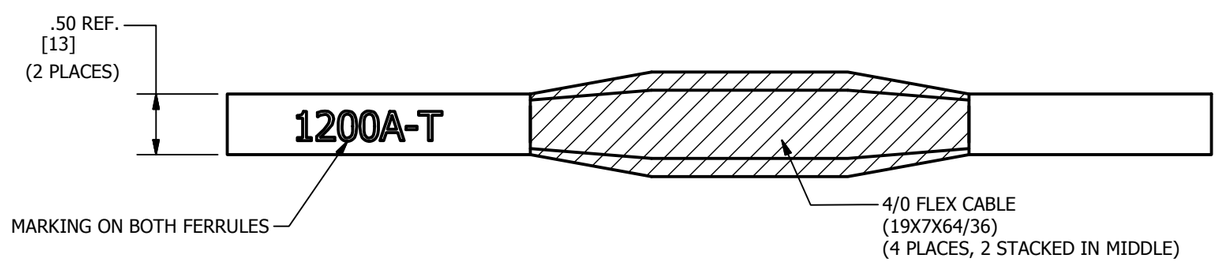

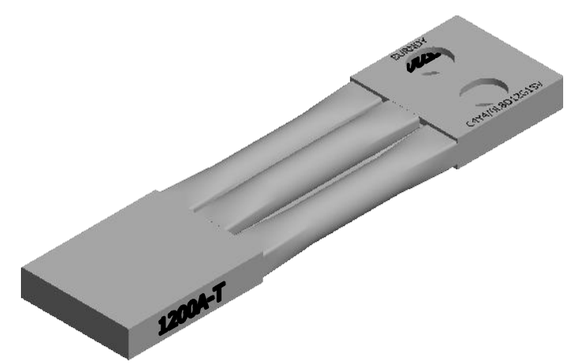

NOTES:

1. MATERIAL:
   FERRULE: COPPER, SILVER PLATED
   CABLE: 4/0 FLEX (8512/36) TIN COATED COPPER.

2. DIMENSIONS IN BRACKETS [ ] ARE IN MILLIMETERS ROUNDED OFF TO THE NEAREST MILLIMETER, UNLESS OTHERWISE SPECIFIED AND ARE FOR REFERENCE ONLY.

TO ORDER BURNDY® PRODUCTS CALL

UNITED STATES
1-800-346-4175 (LONDONDERRY, NH)

CANADA:
1-800-361-6975 (QUEBEC)
1-800-387-6487 (ALL OTHER PROVINCES)

FOR PRODUCT INFO: http://www.burndy.com

JUMPER

ITEM NO: 50072040

CAT. NO: C4Y4/0L8D12G1SV

DRAWN BY:	ARJUN	5/11/2016
CHECKER:	MANIKANDAN B	5/11/2016
DSN APRVL:	L. TROMBLEY	11/17/2016
MFG APRVL:	M. STEVENS	11/16/2016
QA APRVL:	C. LINDQUIST	11/18/2016
MKT APRVL:	K. ROBICHEAU	11/16/2016
PROD FAM:	--	
PROJECT #:	FOCUS	
DOCUMENT TYPE:	SALES	
REL LEVEL:	Released	

BURNDY®

SIZE	DRAWING NO	REV
B	50072041	A
	SHEET 1 OF 1	