NOTES:

1	CREEPAGE DISTANCE OUTSIDE:	163.9 in / 4163 mm
2	ARC DISTANCE:	54.7 in / 1389 mm
3	INSULATION TYPE:	APG-02 CYCLOALIPHATIC EPOXY COLOR: GREY
4	NOMINAL VOLTAGE:	138 kV
5	MAX LINE TO GROUND VOLTAGE :	102 kV
6	NOMINAL CURRENT:	800A DRAWLEAD CONNECTION 1200A BOTTOM CONNECTION
7	VOLTAGE WITHSTAND, 60 sec.:	310 kV
8	B.I.L. :	650 kV
9	STANDARD:	IEEE C57.19.01
10	1)MAX. TORQUE APPLIED ON FLANGE BOLTS:	70 lbf·ft / 94.9 N·m
	2)MAX. TORQUE APPLIED ON TOP TERMINAL:	80 lbf·ft / 108.4 N·m
11	WEIGHT:	386 lb / 175.1 kg
12	MAXIMUM ALTITUDE:	6561 ft / 2000 m

REVISIONS

ZONE	REV.	DESCRIPTION	DRAWN BY	DATE	APPR.
	A	RELEASED FOR PRODUCTION	A.SAVARD	2020-05-25	J.V.

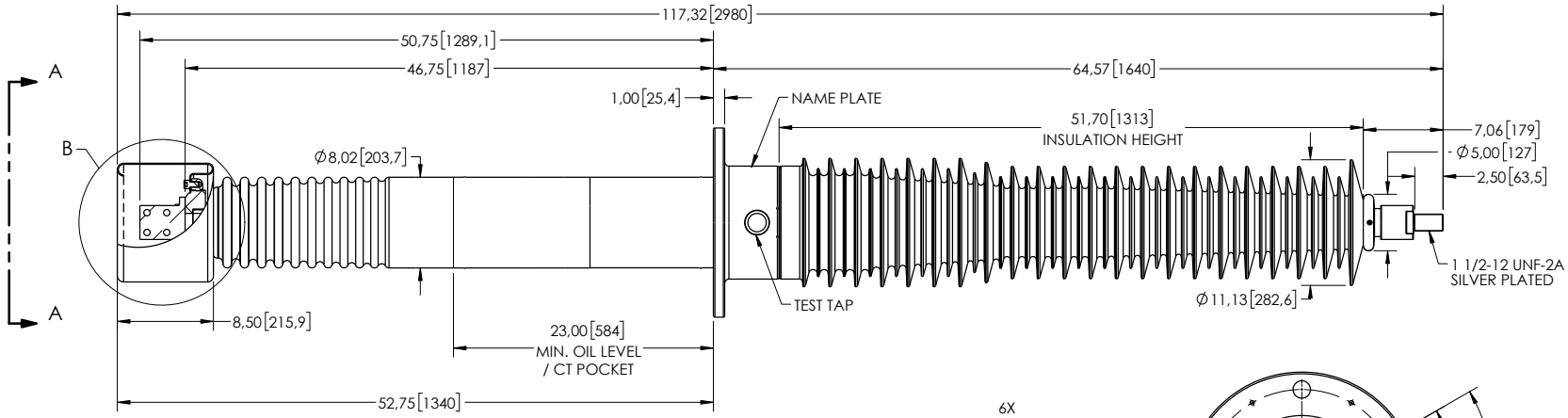

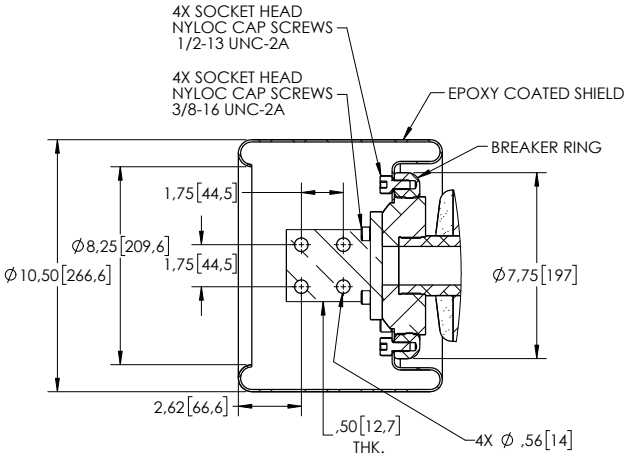

SILVER PLATED COPPER NEMA PAD
AND EPOXY COATED SHIELD
WITH NYLOC BOLTS
DETAIL B
SCALE 1 : 8

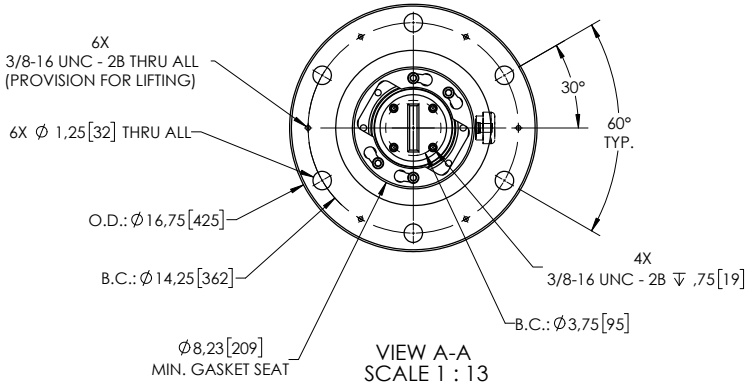

VIEW A-A
SCALE 1 : 13

DIMENSIONS ARE IN INCHES
(UNLESS OTHERWISE SPECIFIED)

ElectroComposites™
solid HV bushings solution

TITLE: SDC® TRANSFORMER BUSHING
138kV, 800/1200A
MODEL: 650-012-230-00

DRAWN BY:	DATE:	FORMAT	CAGE CODE	DRAWING NO.	REVISION
A.SAVARD	2019/04/02	A		S-1001-9843	A
CHECK BY: J Vanier P.Eng. 2020/06/10		SCALE 1:16		GENERATED BY: SolidWorks 2020	SHEET 1 of 1

This drawing is the proprietary property of Electro Composites (2008) ULC, not part of the public domain, and is issued with the express understanding and agreement that it is not to be reproduced or copied in whole or in part or issued for furnishing information to others, or used directly or indirectly, in any way detrimental to the interest of Electro Composites (2008) ULC and is to be returned upon request by Electro Composites (2008) ULC. All Rights Reserved.