HUBBELL POWER SYSTEMS

PCORE ELECTRIC

DATE	11-22-71	REV. DATE	9-2-09

MAXIMUM ALTITUDE	10000 ft [3000 m]
NET WEIGHT	234 lb [106 kg]
ANGLE OF INCLINATION FROM THE VERTICAL	0° TO 60°

kV CLASS 69 kV	BIL 350 kV	Uy 44 kV
CURRENT RATING: 3000 AMP BOTTOM CONNECTION		
MIN. CREEP 53.50 [1358.9]	MIN. STRIKE 24.00 [609.6]	
CREEP/Uy 1.22 [30.9]	STD. IEEE C57.19.00/01	
PCB CONTENT OF OIL IS LESS THAN 1 ppm		

DWG.	CATALOG NUMBER	GLAZE COLOR
SD	B-88032	BROWN
SD	B-88032-70	LT. GRAY

TITLE: POC BUSHING

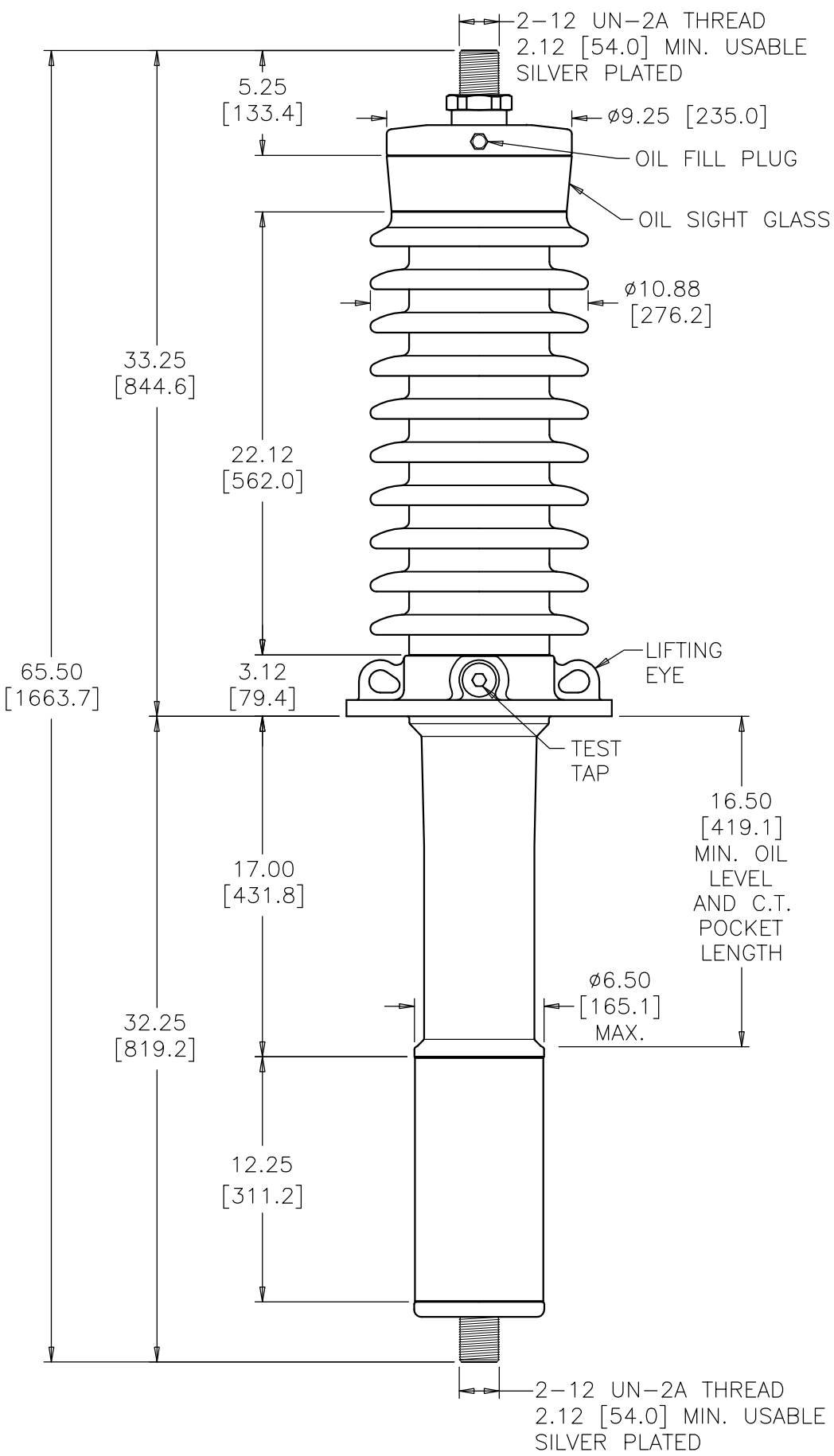

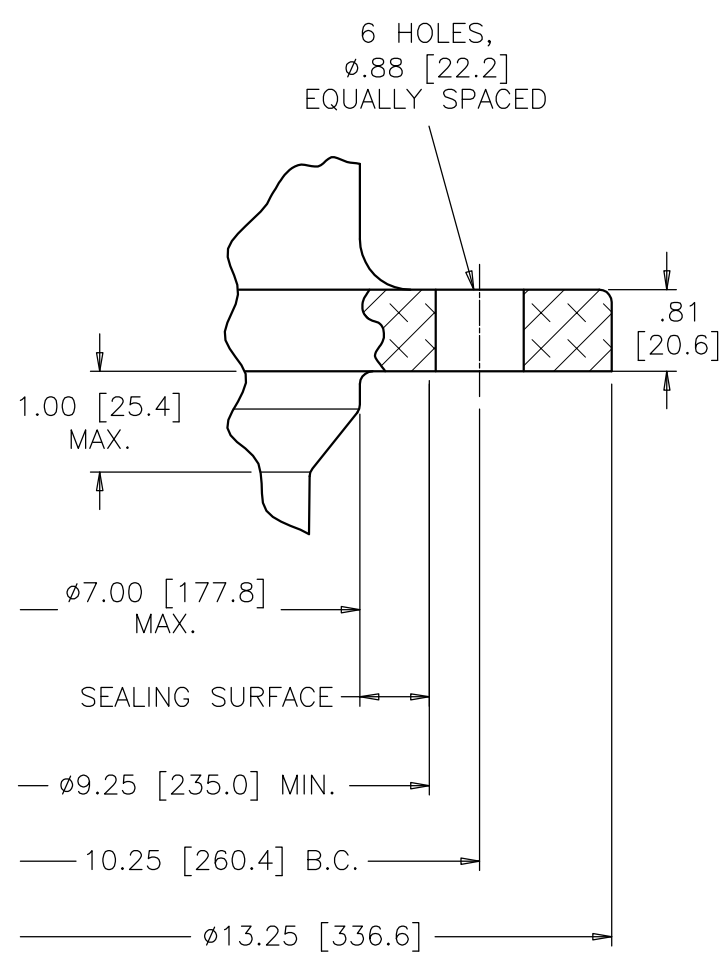

MOUNTING FLANGE

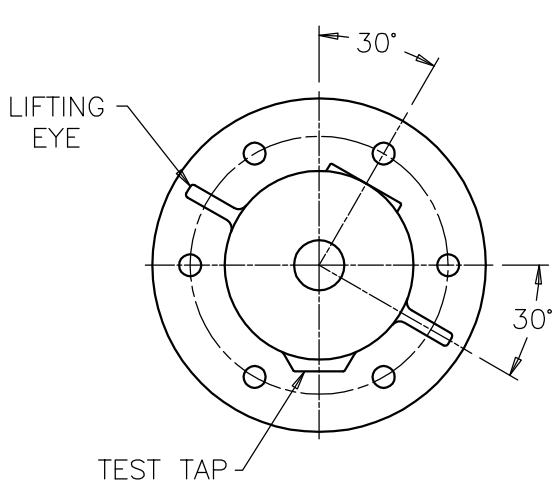

FLANGE ALIGNMENT DIAGRAM
TOP VIEW

DIMENSIONS IN INCHES [MILLIMETERS]

REVISION CHANGED LOWER PORCELAIN & BOTTOM CAP, MAX. ALTITUDE WAS 3300 ft, MIN. CREEP WAS 54.00, REMOVED °C, TEMPERATURE GOVERNED BY IEEE STANDARDS

SCALE 1/8

NOTE TO PURCHASER:
ALL SALES OF PCORE PRODUCTS ARE SUBJECT TO OUR STANDARD TERMS AND CONDITIONS AND THE LIMITED WARRANTIES THEREUNDER