kV CLASS 25 kV	BIL 150 kV	Uy 16 kV

DWG.	CATALOG NUMBER	GLAZE COLOR
SD	B-88722	BROWN
SD	B-88722-70	LT. GRAY

HUBBELL PCORE ELECTRIC

CURRENT RATING

2000 AMP BOTTOM CONNECTED

TITLE

POC BUSHING

DATE 11-22-71	**REV. DATE** 7-29-09
MAXIMUM ALTITUDE 10000 ft [3000 m]	
NET WEIGHT 55 lb [25 kg]	
ANGLE OF INCLINATION FROM THE VERTICAL 0° TO 60°	

MIN. CREEP 19.50 [495.3]	**MIN. STRIKE** 11.00 [279.4]
CREEP/Uy 1.22 [31.0]	**STD.** IEEE C57.19.00/01

PCB CONTENT OF OIL IS LESS THAN 1 ppm

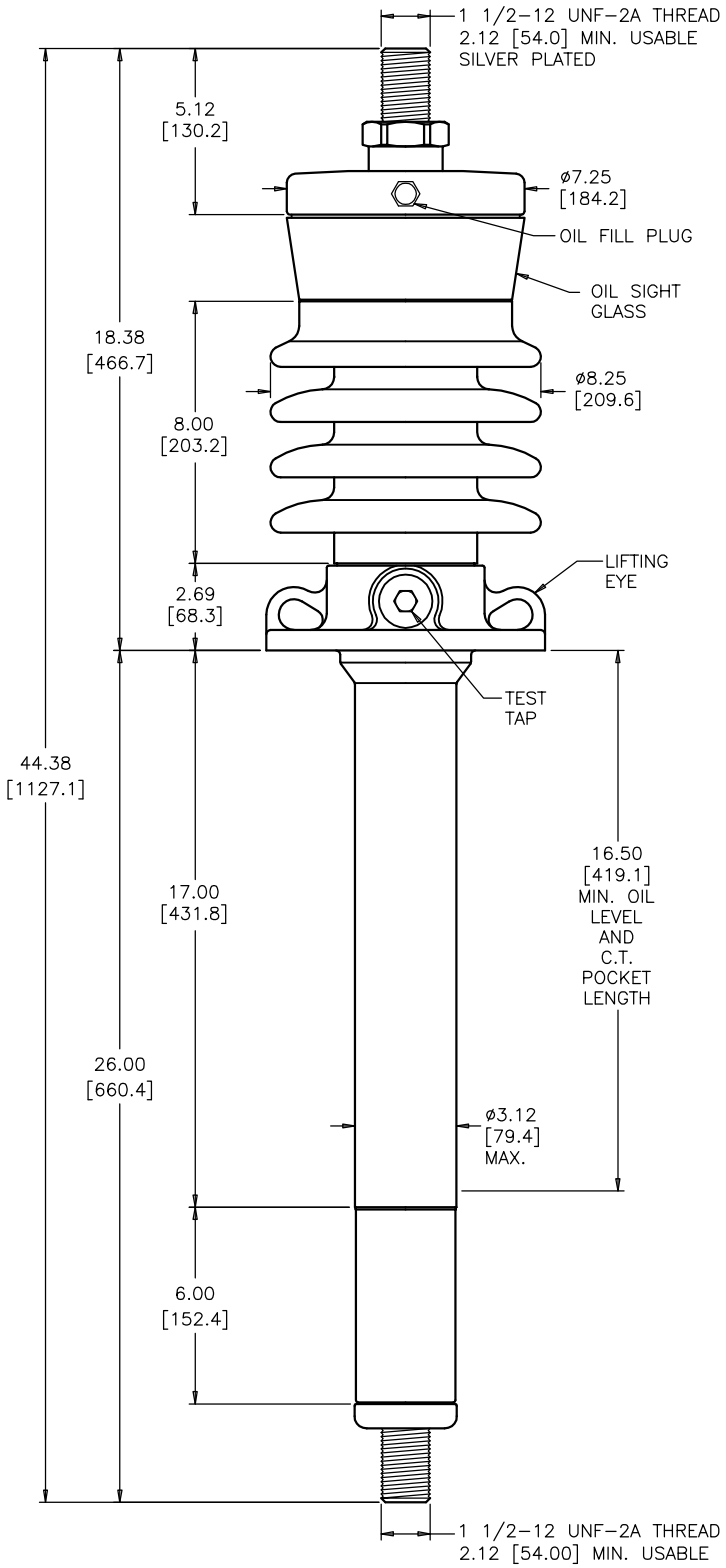

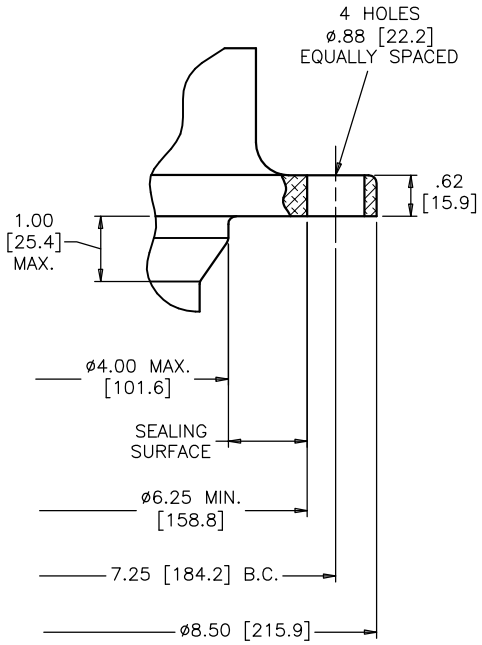

MOUNTING FLANGE DETAIL

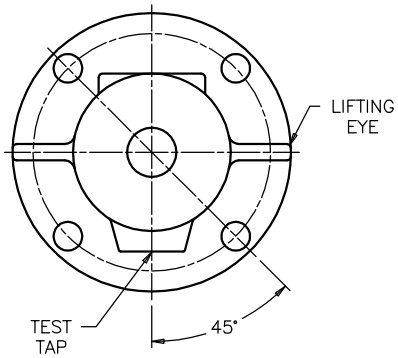

FLANGE ALIGNMENT DIAGRAM
TOP VIEW

DIMENSIONS IN INCHES [MILLIMETERS]

REVISION REMOVED °C, TEMPERATURE GOVERNED BY IEEE STANDARDS, MAXIMUM ALTITUDE WAS 3300 ft

SCALE 1/4

NOTE TO PURCHASER:
ALL SALES OF PCORE PRODUCTS ARE SUBJECT TO OUR STANDARD TERMS AND CONDITIONS AND THE LIMITED WARRANTIES THEREUNDER