HUBBELL POWER SYSTEMS

PCORE ELECTRIC

kV CLASS 34.5 kV	BIL 200 kV	Uy 22 kV	
CURRENT RATING			
3000 AMP BOTTOM CONNECTION			

DWG.	CATALOG NUMBER	GLAZE COLOR
SD	B–88832	BROWN
SD	B–88832–70	LT. GRAY

DATE 11/22/71	REV. DATE 03/09/09
MAXIMUM ALTITUDE	10000 ft [3000 m]
NET WEIGHT	120 lb [54 kg]
ANGLE OF INCLINATION FROM THE VERTICAL	0° TO 60°

MIN. CREEP 30.50 [774.7]	MIN. STRIKE 14.00 [355.6]
CREEP/Uy 1.39 [35.2]	STD. IEEE C57.19.00/01
PCB CONTENT OF OIL IS LESS THAN 1 ppm	

TITLE

POC BUSHING

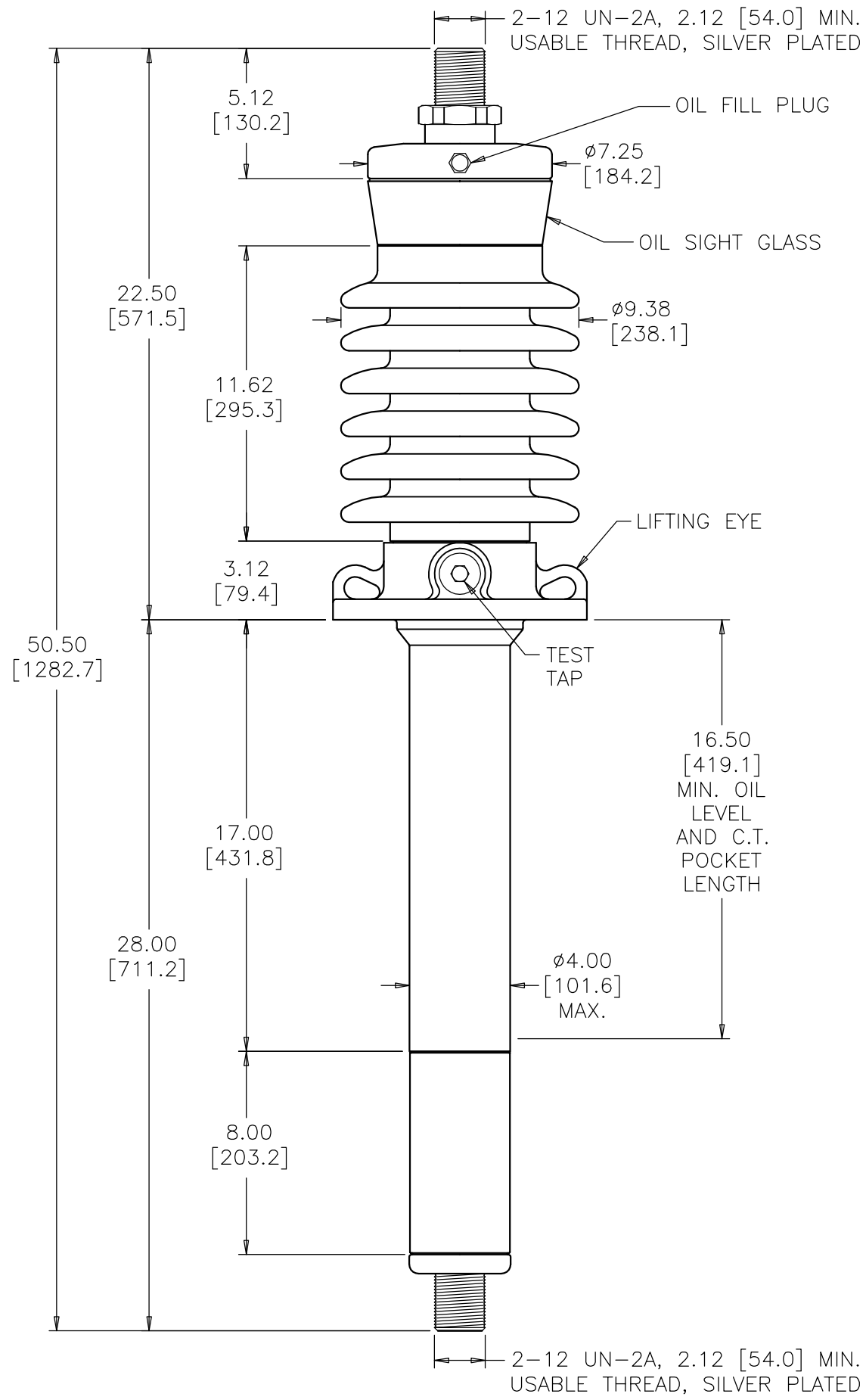

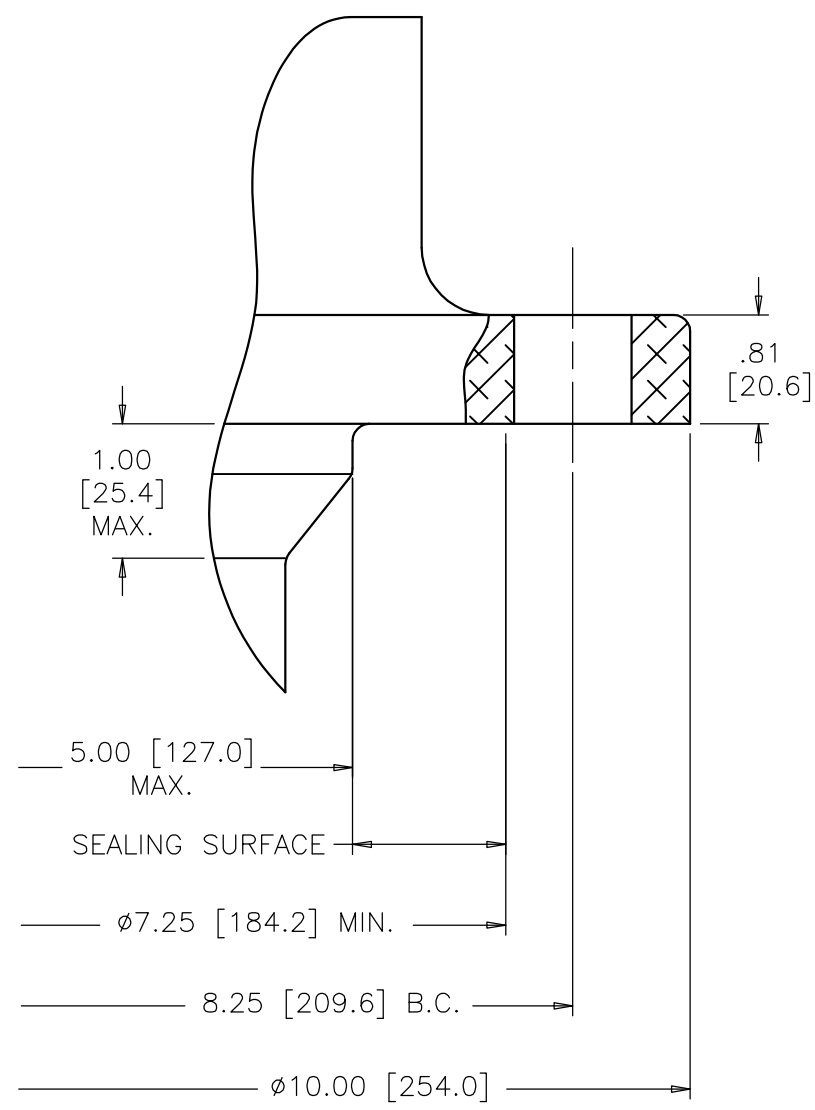

MOUNTING FLANGE DETAIL

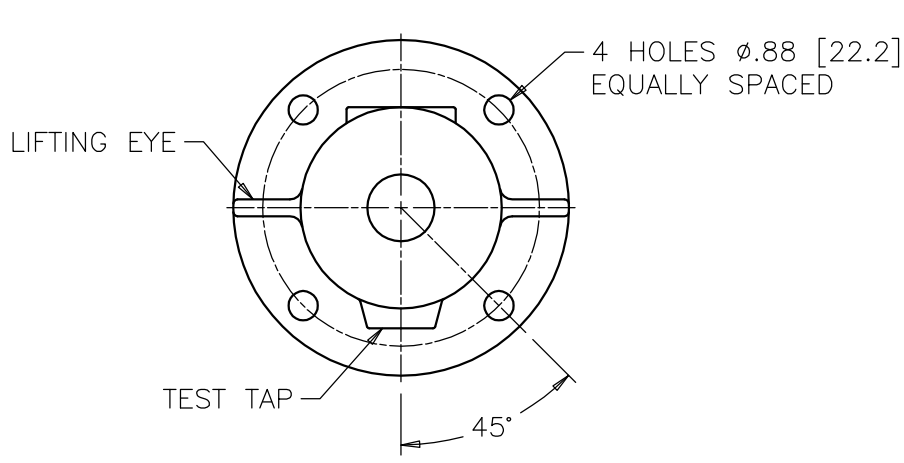

FLANGE ALIGNMENT DIAGRAM
TOP VIEW

DIMENSIONS IN INCHES [MILLIMETERS]

REVISION REMOVED 55°, TEMPERATURE GOVERNED BY IEEE STANDARDS, NET WEIGHT WAS 119 lb	SCALE 1/6

NOTE TO PURCHASER:
ALL SALES OF PCORE PRODUCTS ARE SUBJECT TO OUR STANDARD TERMS AND CONDITIONS AND THE LIMITED WARRANTIES THEREUNDER