NOTES:

1. CREEPAGE DISTANCE: 38.8" / 986mm Ⓑ
2. ARC DISTANCE: 18.9" / 479mm
3. NOMINAL VOLTAGE: 69kV
4. NOMINAL CURRENT: 2000A
5. VOLTAGE WITHSTAND, 60 sec.: 160kV
6. BIL : 350kV
7. ROUTINE TEST ACCORDING TO: IEEE C57.19.01
8. MAX. TORQUE APPLIED ON FLANGE BOLTS: 40 lbf · ft / 54.2 N · m
9. WEIGHT: 98 lb / 44.4 kg
10. BUSHING TO BE FULLY IMMERSED UNDER OIL ON BOTH SIDES OF FLANGE.

REVISIONS

ZONE	REV.	DESCRIPTION	DRAWN BY	DATE	APPR.
A1	A	PART # HAS BEEN CHANGED ACCORDING TO THE OIL-OIL APPLICATION: 350-020-T-903-01 BECOMES 350-020-O-903-01	A.SAVARD	2019-11-18	J.V.
C2, F5	B	ADD SHEDS AND INCREASE CREEP DISTANCE ACCORDINGLY	M. FORGET	2022-09-06	J.V.

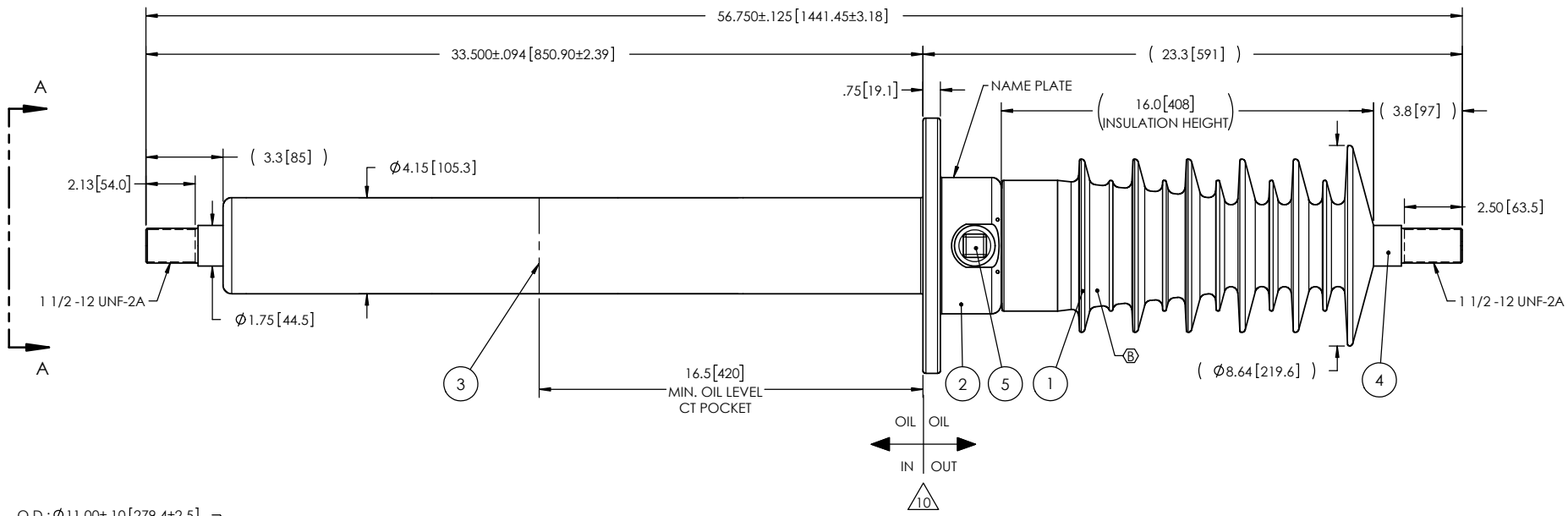

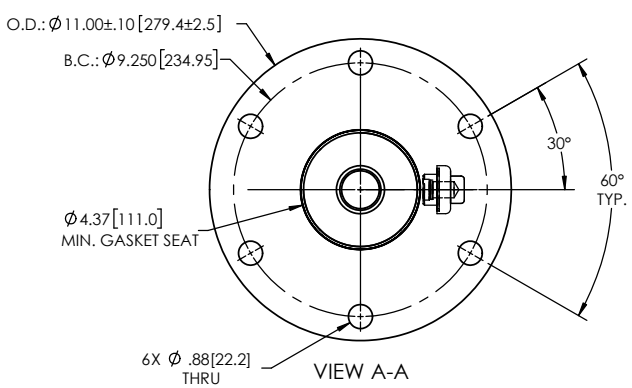

ITEM NO.	QTY	DRAWING NO.	PART NO.	DESCRIPTION	NOTE / MAT'L
5	1	S-1001-2022		CAPACITANCE TAP ASSEMBLY	ALUMINUM
4	1	S-9970-9812		ROD ASSEMBLY	COPPER
3	1	S-5158-4682		SHIELD ASSEMBLY	COPPER
2	1	S-7578-7089		FLANGE	ALUMINUM
1	1	S-9970-9811	-001	CASTING, CYCLOALIPHATIC RESIN	EC-APG-02

PARTS LIST

GENERAL TOLERANCES
(UNLESS OTHERWISE SPECIFIED)

X.	±0.125
.X	±0.094
.XX	±0.063
.XXX	±0.031
ANGLES	±0.25°
RADIUS	±0.031

REMOVE BURRS AND BREAK SHARP EDGES

DIMENSIONS ARE IN INCHES
(UNLESS OTHERWISE SPECIFIED)

DRAWN BY: A.SAVARD
DATE: 2018/10/16
CHECK BY:
PROJECT ENGINEER: 2022/09/07
PROJECT MANAGER:

Electro Composites™
solid HV bushings solution

TITLE:
SDC® BUSHING , 69kV, 2000A
MODEL: 350-020-O-903-01

FORMAT	CAGE CODE	DRAWING NO.	REVISION
A		S-9970-9811	B

SCALE 1:7
GENERATED BY: SolidWorks 2021
SHEET 1 of 1

This drawing is the proprietary property of Electro Composites (2008) ULC, not part of the public domain, and is issued with the express understanding and agreement that it is not to be reproduced or copied in whole or in part or issued for furnishing information to others, or used directly or indirectly, in any way detrimental to the interest of Electro Composites (2008) ULC and is to be returned upon request by Electro Composites (2008) ULC. All Rights Reserved.