NOTES:
1 CREEPAGE DISTANCE: 36.9" / 937mm
2 ARC DISTANCE: 15.1" / 384mm
3 NOMINAL VOLTAGE: 25kV
4 NOMINAL CURRENT: 6,000A
5 VOLTAGE WITHSTAND, 60 sec.: 60kV
6 BIL : 150kV
7 ROUTINE TEST ACCORDING TO: IEEE C57.19.01
8 MAX. TORQUE APPLIED ON FLANGE BOLTS: 70 lbf·ft / 94.9 N·m
9 WEIGHT: 290 lb / 131.5 Kg
10 MAXIMUM OPERATING TEMPERATURE: 130°C
11 SILVER PLATED, AS PER ASTM B700, TYPE 1, GRADE D, CLASS N, NO NICKEL LAYER, FROM 13 TO 20 MICROMETERS THICKNESS
12 THE CAPACITANCE TAP ORIENTATION CAN BE DIFFERENT FROM THE DRAWING

REVISIONS					
ZONE	REV.	DESCRIPTION	DRAWN BY	DATE	APPR.

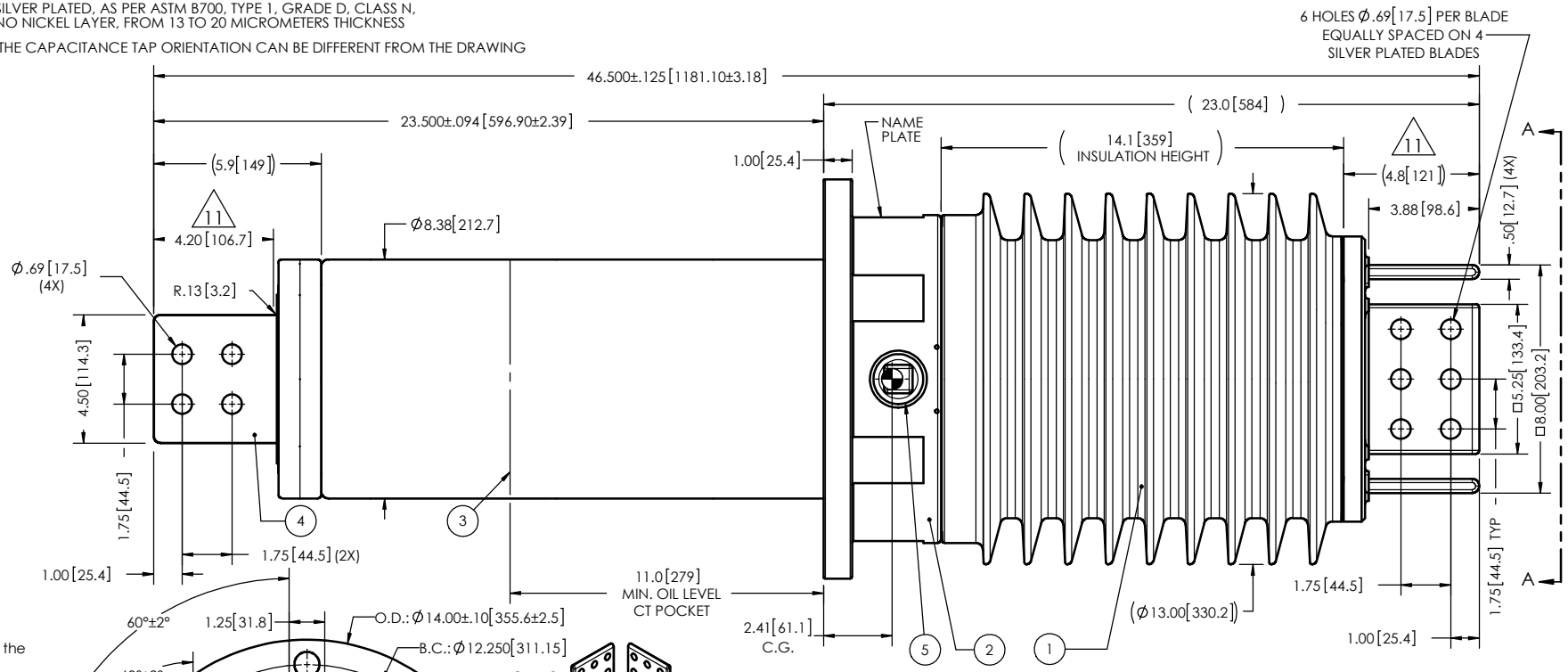

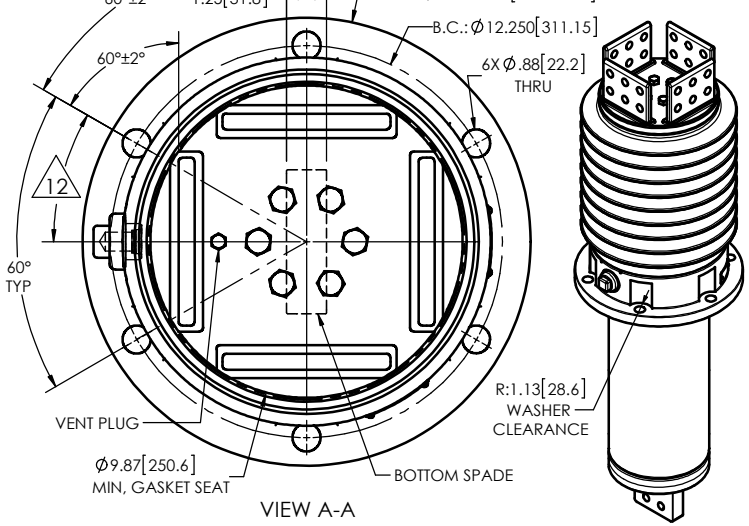

VIEW A-A

ITEM NO.	QTY	DRAWING NO.	PART NO.	DESCRIPTION	NOTE / MAT'L
5	1	S-1001-2022		CAPACITANCE TAP ASSEMBLY	ALUMINUM
4	1	S-1867-3038		TUBE ASSEMBLY	COPPER
3	1	S-1867-3037		SHIELD ASSEMBLY	BRASS
2	1	S-6790-6431		FLANGE	ALUMINUM
1	1	S-1867-3036	-001	CASTING, CYCLOALIPHATIC RESIN	EC-APG-15NA

PARTS LIST

GENERAL TOLERANCES (UNLESS OTHERWISE SPECIFIED)

X.	±0.125
.X	±0.094
.XX	±0.063
.XXX	±0.031
ANGLES	±0.25°
RADIUS	±0.031

REMOVE BURRS AND BREAK SHARP EDGES

DIMENSIONS ARE IN INCHES (UNLESS OTHERWISE SPECIFIED)

DRAWN BY: J. CLICHE DATE: 2015/11/23
CHECK BY: P. Vanetts ing. 2015/12/10
PROJECT MANAGER:

Electro Composites™
solid HV bushings solution

TITLE:
SDC® GSU BUSHING 25kV, 6000A
MODEL: 150-060-G-941-00

FORMAT	CAGE CODE	DRAWING NO.	REVISION
A		S-1867-3036	NR

SCALE 1:6 GENERATED BY: SolidWorks 2013 SHEET 1 of 1

This drawing is the proprietary property of Electro Composites (2008) ULC, not part of the public domain, and is issued with the express understanding and agreement that it is not to be reproduced or copied in whole or in part or issued for furnishing information to others, or used directly or indirectly, in any way detrimental to the interest of Electro Composites (2008) ULC and is to be returned upon request by Electro Composites (2008) ULC. All Rights Reserved.