NOTES:

1	CREEPAGE DISTANCE:	32.5" / 826mm
2	ARC DISTANCE:	13.7" / 348mm
3	NOMINAL VOLTAGE:	25kV
4	NOMINAL CURRENT:	7,500A
5	VOLTAGE, WITHSTAND, 60 sec.:	60kV
6	BIL :	150kV
7	ROUTINE TEST ACCORDING TO:	IEEE C57.19.01
8	MAX. TORQUE APPLIED ON FLANGE BOLTS:	70 lbf · ft / 94.9 N · m
9	WEIGHT:	323 lb / 146.5 Kg
10	MAXIMUM OPERATING TEMPERATURE:	130°C (266°F)
11	SILVER PLATED, AS PER ASTM B700,TYPE 1, GRADE D, CLASS N, NO NICKEL LAYER, FROM 13 TO 20 MICROMETERS THICKNESS	
12	THE CAPACITANCE TAP ORIENTATION CAN BE DIFFERENT FROM THE DRAWING.	

REVISIONS					
ZONE	REV.	DESCRIPTION	DRAWN BY	DATE	APPR.

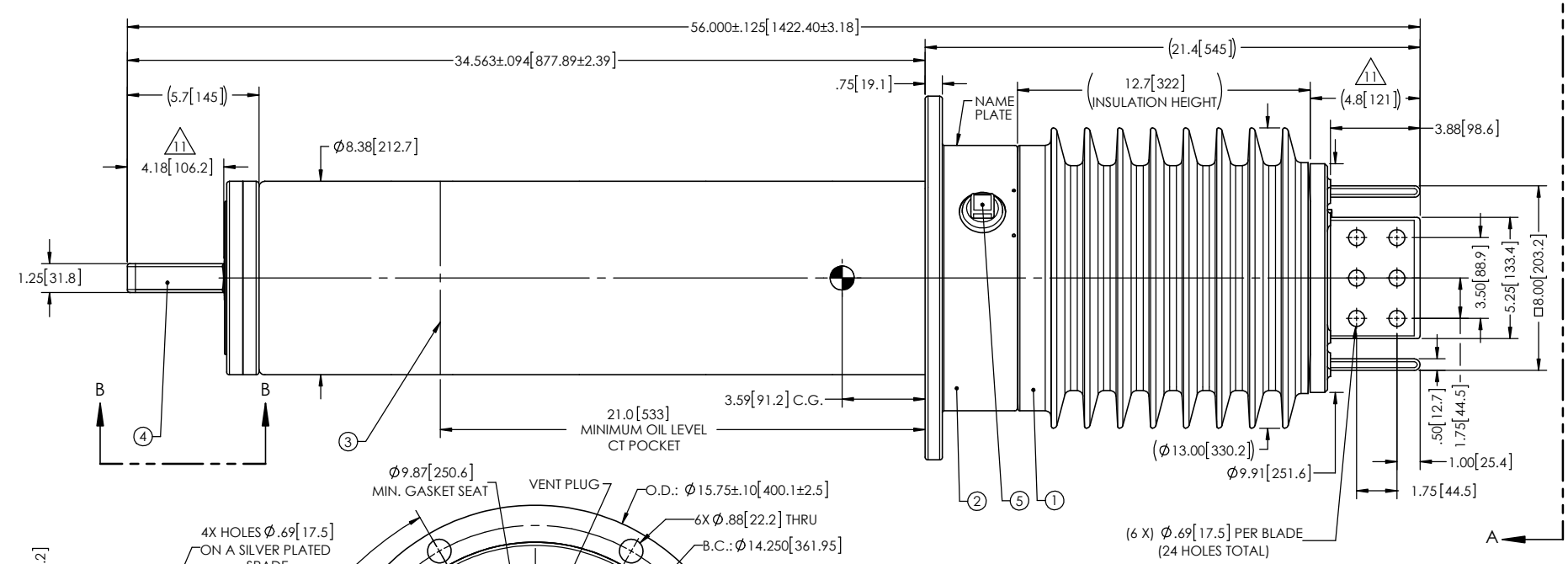

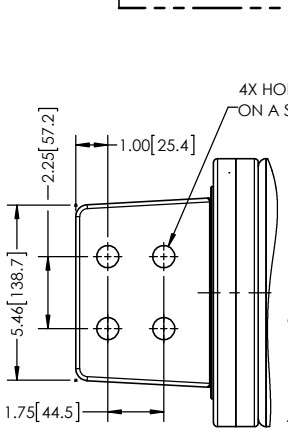

VIEW B-B
SCALE 1 : 6

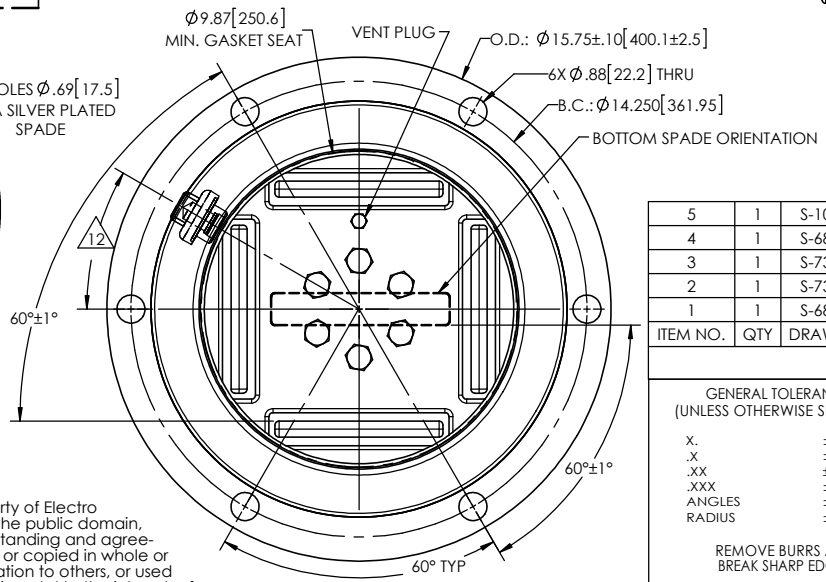

VIEW A-A
SCALE 1 : 6

ITEM NO.	QTY	DRAWING NO.	PART NO.	DESCRIPTION	NOTE / MAT'L
5	1	S-1001-2022		CAPACITANCE TAP ASSEMBLY	ALUMINUM
4	1	S-6861-9189		CONDUCTOR ASSEMBLY	COPPER
3	1	S-7376-7327		SHIELD ASSEMBLY	BRASS
2	1	S-7376-7326		FLANGE	ALUMINUM
1	1	S-6861-9188	-001	CASTING, CYCLOALIPHATIC RESIN	EC-APG-15NA

PARTS LIST

GENERAL TOLERANCES
(UNLESS OTHERWISE SPECIFIED)

X.	±0.125
.X	±0.094
.XX	±0.063
.XXX	±0.031
ANGLES	±0.25°
RADIUS	±0.031

REMOVE BURRS AND BREAK SHARP EDGES

DIMENSIONS ARE IN INCHES
(UNLESS OTHERWISE SPECIFIED)

DRAWN BY: J. CLICHE — DATE: 2016/09/21
CHECK BY: 2016/09/29
PROJECT MANAGER:

Electro Composites™
solid HV bushings solution

TITLE:
SDC® GSU BUSHING 25kV, 7,500A
MODEL: 150-075-G-973-00

FORMAT	CAGE CODE	DRAWING NO.	REVISION
A		S-6861-9188	NR

SCALE: 1:7 — GENERATED BY: SolidWorks 2013 — SHEET: 1 of 1

This drawing is the proprietary property of Electro Composites (2008) ULC, not part of the public domain, and is issued with the express understanding and agreement that it is not to be reproduced or copied in whole or in part or issued for furnishing information to others, or used directly or indirectly, in any way detrimental to the interest of Electro Composites (2008) ULC and is to be returned upon request by Electro Composites (2008) ULC. All Rights Reserved.