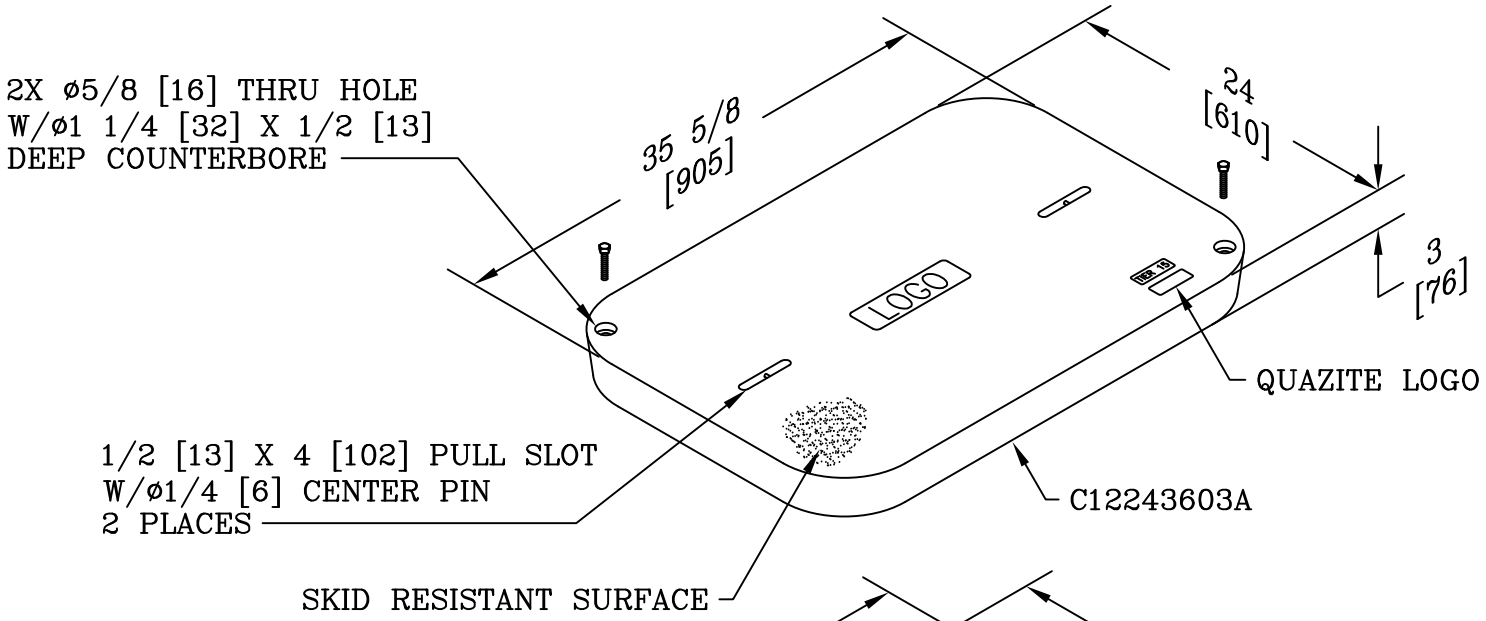

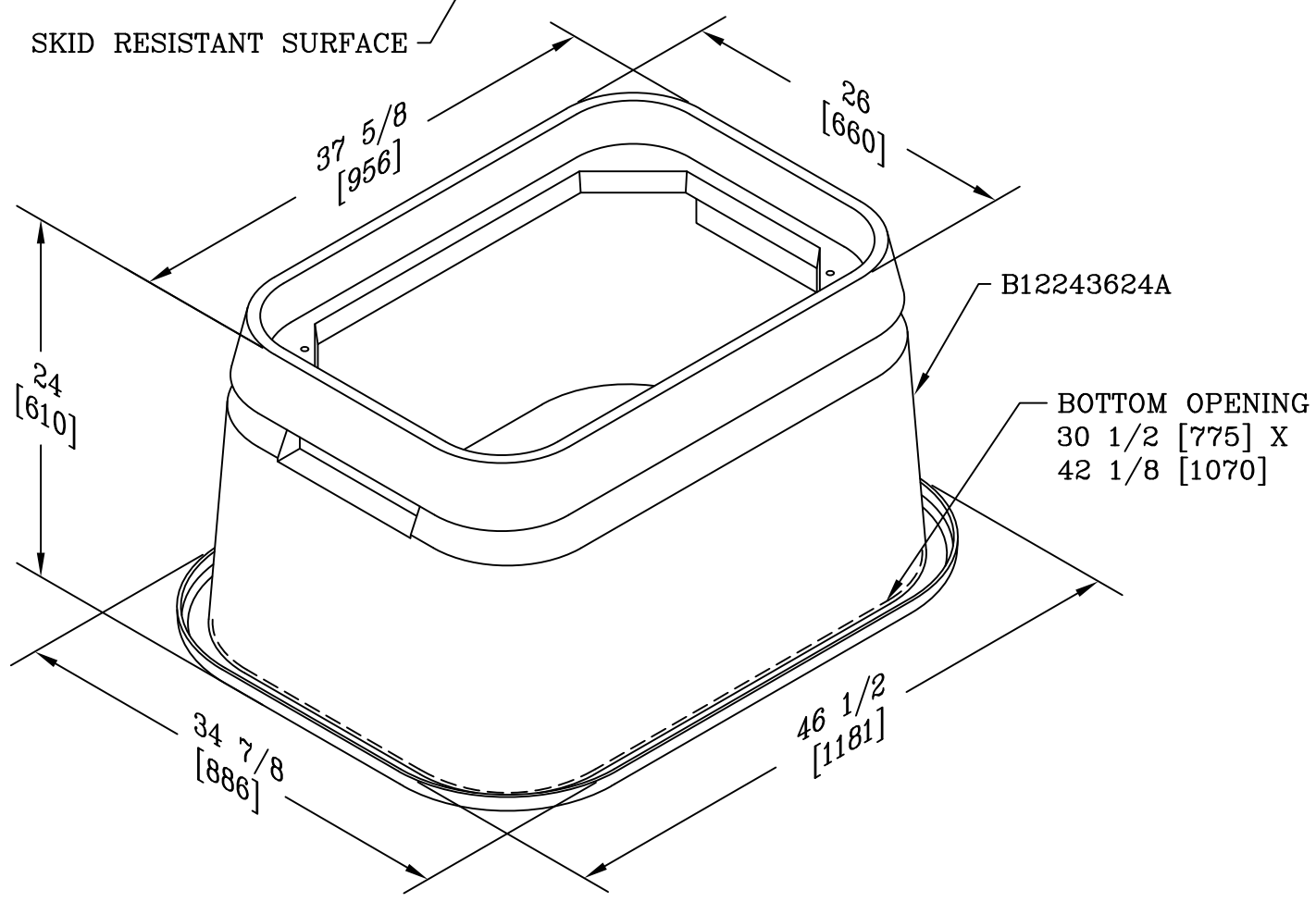

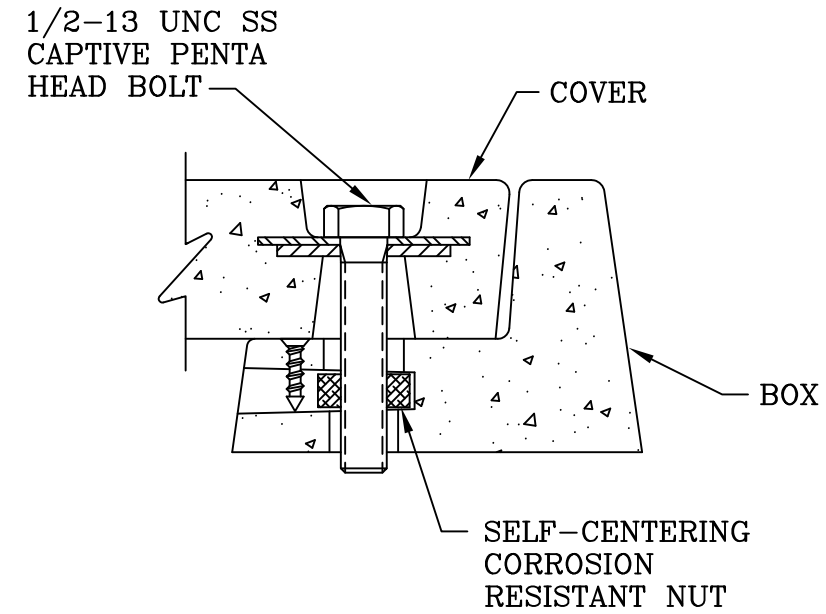

BOLT DOWN DETAIL

NOTES:

1. LOGO TO BE SPECIFIED:_____.
2. THIS ASSEMBLY IS RATED FOR A STATIC DESIGN LOAD OF 15,000 LBS. [66,720 N] OVER A 10 [254] X 10 [254] AREA AND MUST PASS A MINIMUM STATIC TEST LOAD OF 22,500 LBS. [100,080 N].
3. OLD P/N: A12-2436-24

DIMENSIONS ARE IN INCHES OR MILLIMETERS IN BRACKETS UNLESS OTHERWISE NOTED.

	BY	DATE	WEIGHT		LOC
DRN	JJP	4/16/10	208# 94kg	HUBBELL® 3621 INDUSTRIAL PARK DR LENOIR CITY, TN 37771 800-346-3062 www.quazite.com	S
CHK			SCALE NTS	DRAWING DESCRIPTION QUAZITE® 24 X 36 X 24 ASSEMBLY	REV A
ENG					
APR			SIZE B		4/10
APR					
ESR OR PROJECT NUMBER				SHEET 1 OF 1	DRAWING NUMBER A12243624A