18” 100 SERIES N-STYLE JACK BULKHEAD TO N-STYLE PLUG CABLE ASSEMBLY

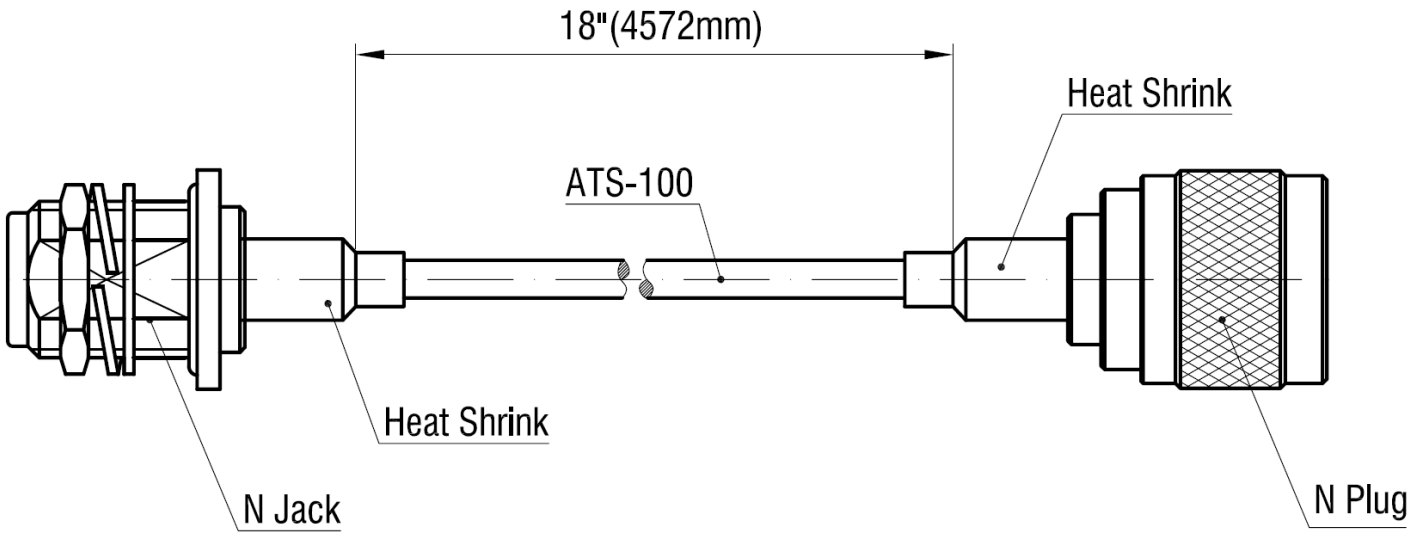

TITLE: 18” 100 Series N-Style Bulkhead Jack to N-Style Plug Cable	
PART NUMBER: ATS-100-NBHJ-NP-18in	AccelTex Solutions
V1.0	1.888.406.8906
	sales@acceltex.com

The facts and figures herein are carefully compiled to the best of our knowledge and are intended for general informational purposes only. Responsibility for the use and application of AccelTex Solutions materials rests with the end user. All AccelTex Solutions products are sold pursuant to the AccelTex Solutions Terms and Conditions of Sale. © 2016 AccelTex Solutions. All Rights Reserved. AccelTex, AccelTex Solutions, the AccelTex Solutions Logo and other marks are trademarks or registered trademarks of AccelTex Solutions. Other products or service names may be the property of third parties.