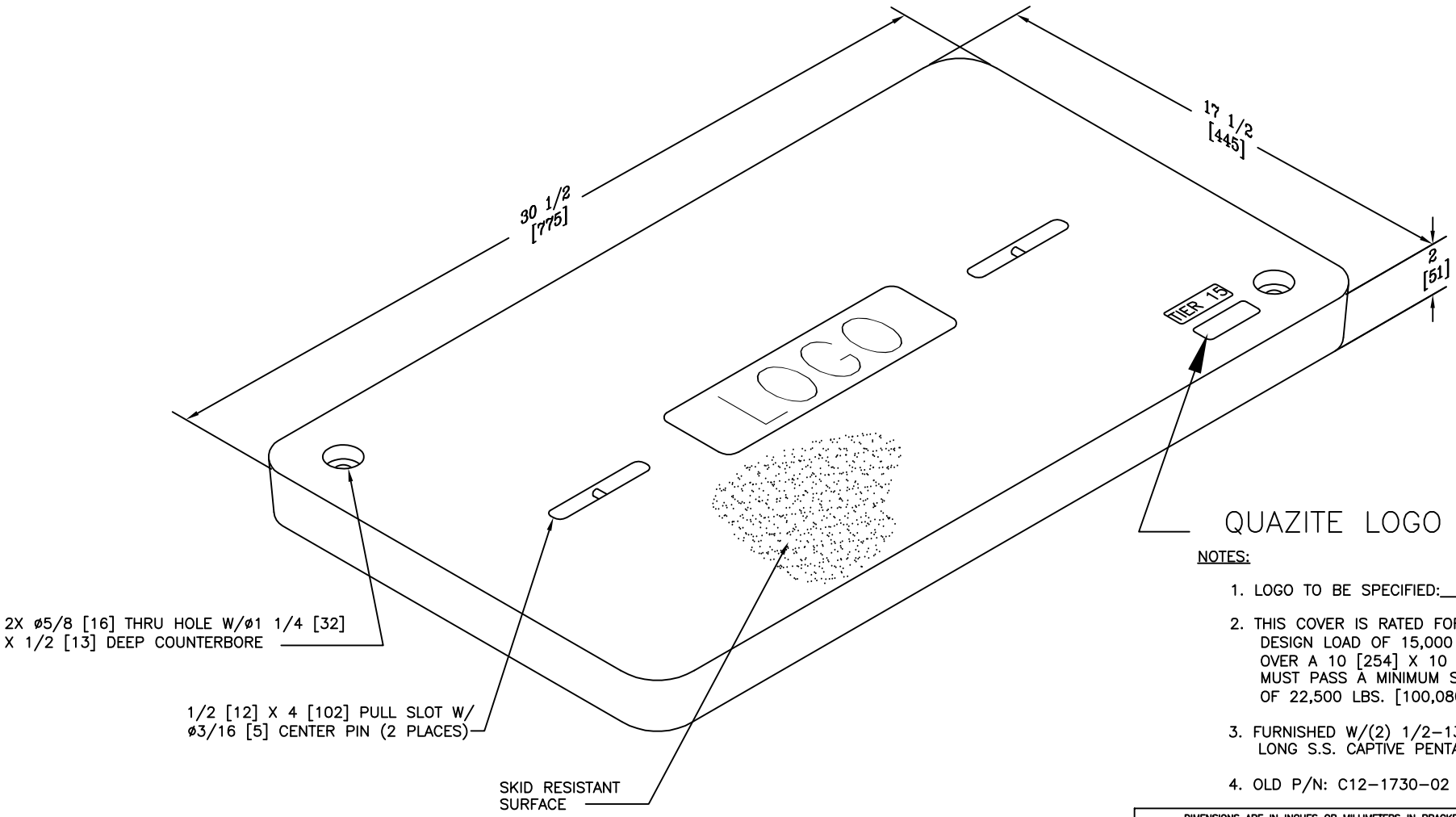

NOTES:

1. LOGO TO BE SPECIFIED:_____.
2. THIS COVER IS RATED FOR A STATIC DESIGN LOAD OF 15,000 LBS. [66,720 N] OVER A 10 [254] X 10 [254] AREA AND MUST PASS A MINIMUM STATIC TEST LOAD OF 22,500 LBS. [100,080 N].
3. FURNISHED W/(2) 1/2–13 UNC X 3 [76] LONG S.S. CAPTIVE PENTA HEAD BOLTS.
4. OLD P/N: C12–1730–02

DIMENSIONS ARE IN INCHES OR MILLIMETERS IN BRACKETS UNLESS OTHERWISE NOTED.

	BY	DATE	WEIGHT		LOC
DRN	CGH	3/16–10	86# 39kg	HUBBELL® 3621 INDUSTRIAL PARK DR LENOIR CITY, TN 37771 800–346–3062 www.quazite.com	OB S
CHK			SCALE NTS	DRAWING DESCRIPTION QUAZITE® 17 X 30 X 02 COVER	REV B
ENG					
APR			SIZE B	STANDARD VERSION	4/11
APR					
PROJECT NUMBER 10444				SHEET 1 OF 1	DRAWING NUMBER C12173002A