S.NO	CATALOG NUMBER	L	B
1	NSSM500-2SL	5.64 [143]	2
2	NSSM500-2SLI	5.64 [143]	2
3	NSSM500-3SL	6.83 [173]	3
4	NSSM500-3SLI	6.83 [173]	3
5	NSSM500-4SL	8.01 [204]	4
6	NSSM500-4SLI	8.01 [204]	4
7	NSSM500-6SL	10.61 [269]	6
8	NSSM500-6SLI	10.61 [269]	6
9	NSSM500-8SL	12.76 [324]	8
10	NSSM500-8SLI	12.76 [324]	8

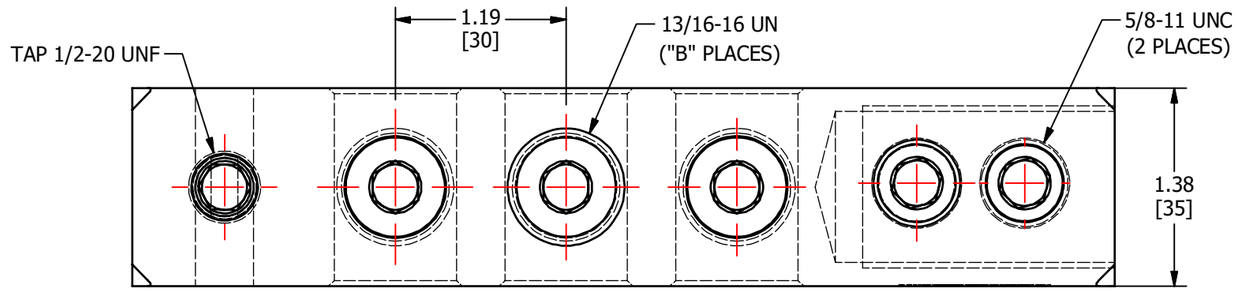

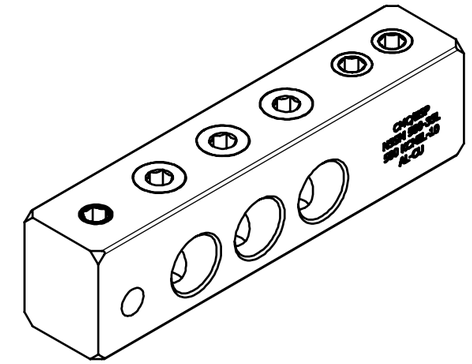

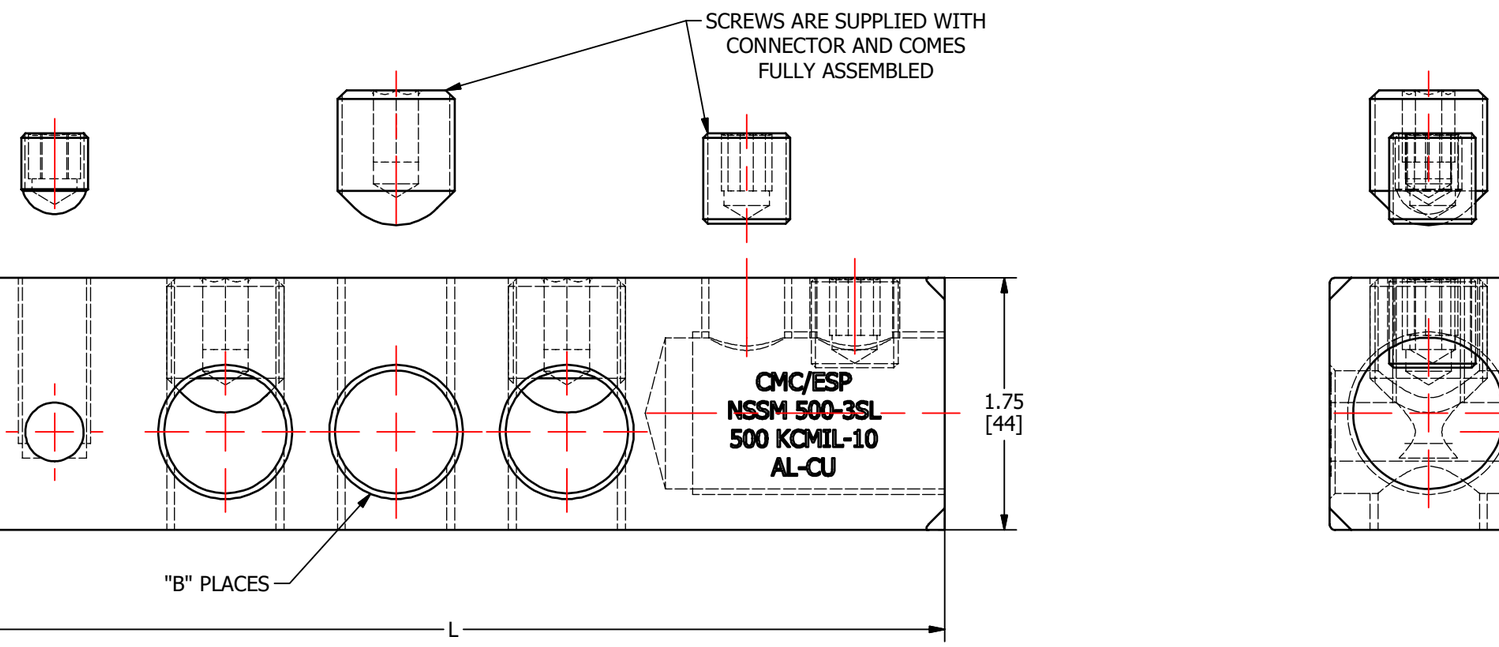

REV.	DESCRIPTION	ECN	DATE	INIT.
A	NEW DRAWING CREATED		02/04/19	TS

TO ORDER CMC PRODUCTS CALL 1-513-860-4455

FOR PRODUCT INFO: http://www.cmclugs.com

DRAWN BY: TS 02/04/19

CHECKED BY:

NAME OF PART: STUD MOUNT CONNECTOR

DWG NO: C58701254-S (CHARTED)

B

CAT. NO.: SEE TABLE

DRAWING NOT TO SCALE

SHEET NO: 1 OF 1

THIS INFORMATION IS PROPRIETARY TO CONNECTOR MFG. CO. AND IS NOT TO BE DISCLOSED OUTSIDE OF CONNECTOR MFG. CO. WITHOUT A CONFIDENTIALITY AGREEMENT

HUBBELL

CONNECTOR MANUFACTURING CO.

HAMILTON, OHIO