TRANSFORMER SPECIFICATIONS	
PRIMARY VOLTAGE(S)	208/277
SECONDARY VOLTAGE(S)	120
RATED V.A.	50
RATED FREQUENCY	50/60
INSULATION CLASS	130°C @ MAX RISE 55°C
AGENCY APPROVALS	UL, CUL
ESTIMATED WEIGHT	2.6 LBS

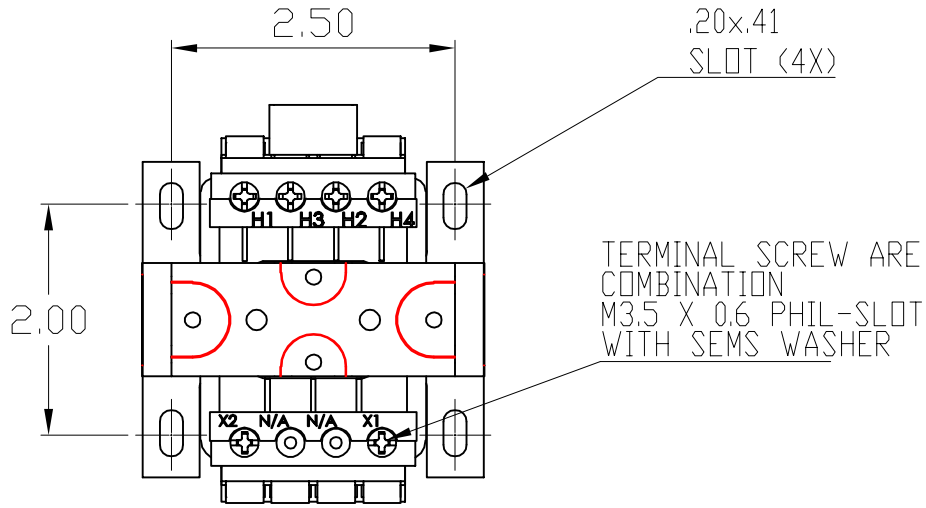

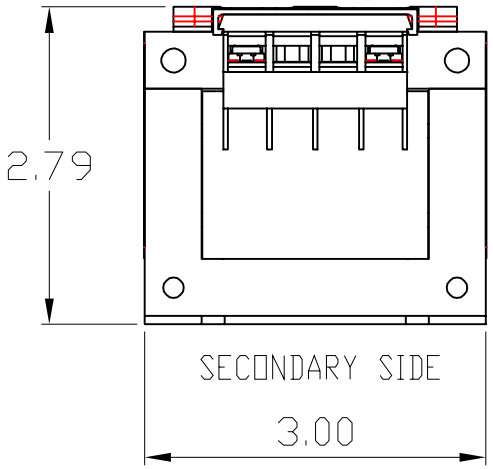

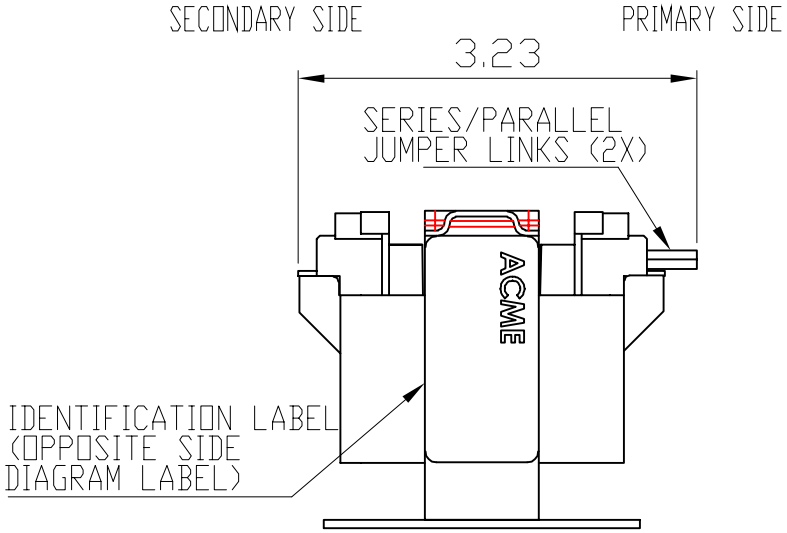

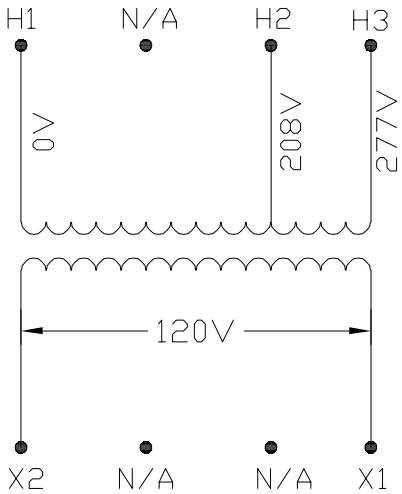

CONNECTION DIAGRAM

DIMENSIONS ARE IN INCHES TOLERANCES: .XX ± .03 .XXX ± .010 ANGULAR: ± 1°		NAME	DATE
	DRAWN BY:	VS	06/04/20
	CHECKED BY:		
SOURCE N/A	PROPRIETARY AND CONFIDENTIAL THE INFORMATION CONTAINED IN THIS DRAWING IS THE SOLE PROPERTY OF ACME ELECTRIC. ANY REPRODUCTION IN PART OR AS A WHOLE WITHOUT THE WRITTEN PERMISSION OF ACME ELECTRIC IS PROHIBITED.		
MATERIAL N/A			
FINISH N/A			
DO NOT SCALE DRAWING			

Acme Electric®

DESCRIPTION: 50 VA

SIZE A | DWG. NO. CE50N006

WEIGHT: LBS. | SHEET 1 OF 1