REV.	DATE	DESCRIPTION	BY	C'H'K.
A	28-mar-01	FIRST DRAFT	PW	RJG
B	09-SEP-04	CHANGED TO FOUR HOLES PER FERRULE - CSC-04-024	PW	RJG

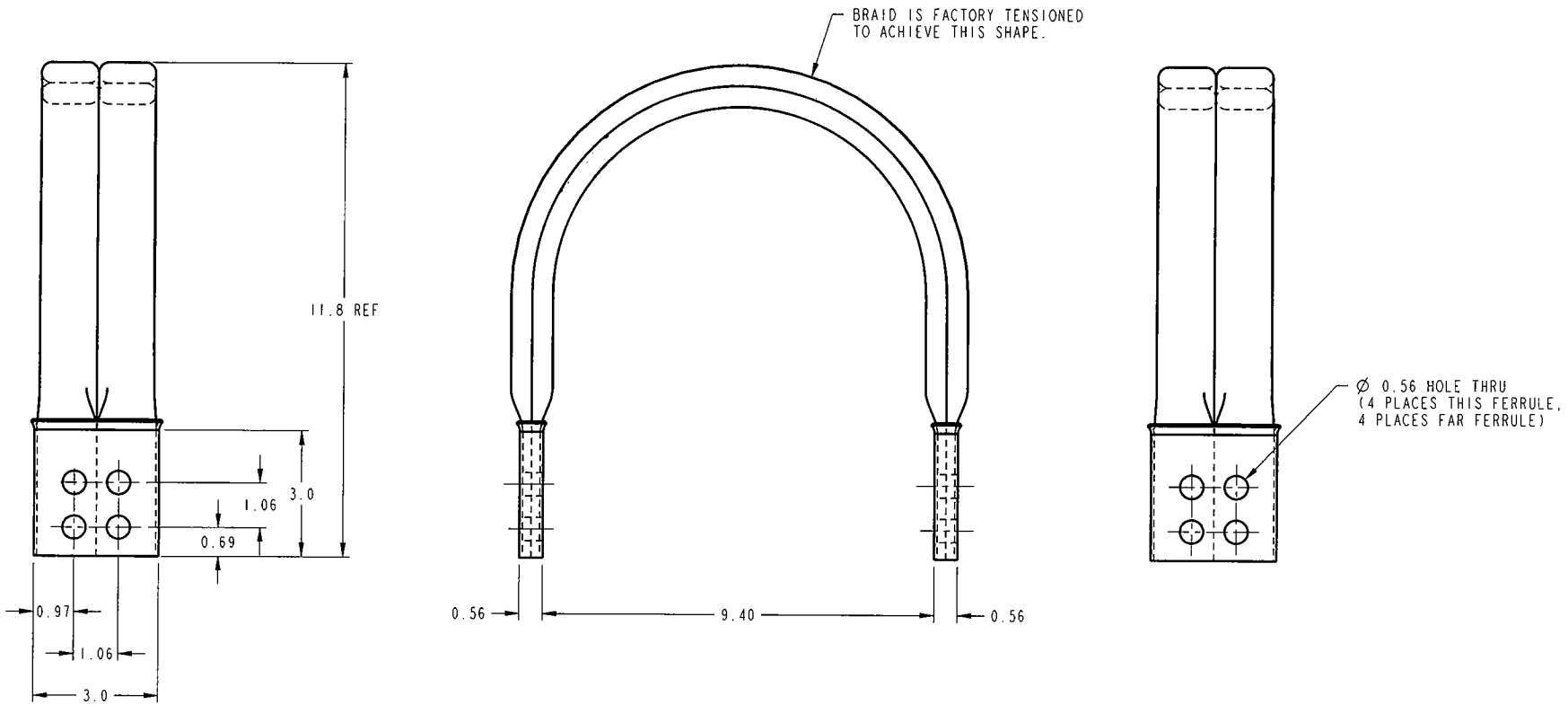

NOTES:

1) ALL DIMENSIONS IN INCHES UNLESS OTHERWISE SPECIFIED.

2) MATERIAL:
BRAID - TIN PLATED COPPER
FERRULES - COPPER

3) DESIGN IS FOR 1200 AMPS INDOOR

GENERAL NOTES:

1. ALTHOUGH THIS DRAWING MAY ORIGINALLY HAVE BEEN DEVELOPED TO SCALE, THE USE OF ELECTRONIC DESIGN AND REPRODUCTION TECHNIQUES MAY RESULT IN THIS COPY NOT BEING TO SCALE. THEREFORE, DO NOT SCALE THIS PRINT.
2. THE DIMENSIONS, TOLERANCES AND SPECIFICATIONS OF THIS DESIGN ARE GIVEN TO PROVIDE A DEFINITION OF THE FUNCTIONAL REQUIREMENTS FOR THIS COMPONENT OR PRODUCT. ANY PART NOT MEETING THESE REQUIREMENTS SHALL BE CONSIDERED AS SCRAP.

THIS DRAWING AND/OR SPECIFICATION IS THE PROPERTY OF FRAMATOME CONNECTORS CANADA INC. IT IS ISSUED IN STRICT CONFIDENCE AND SHALL NOT BE REPRODUCED, OR COPIED, OR DISCLOSED TO OTHERS, OR USED AS THE BASIS FOR THE MANUFACTURE OR SALES OF APPARATUS WITHOUT THE PERMISSION OF THE OWNER.

BRAID

CAT NO: **B22G26D75CG1** | SCALE 0.375

DRAWN BY: PW 28-MAR-01		CHECKER:	
DSN APPVL:		MFG APPVL:	
QC APPVL:		MKT APPVL:	
CAD FILE: CSC34073		PART FILE: CSC34073	
		REF FILE:	
		PROJECT:	

FRAMATOME CONNECTORS CANADA INC.
FCI ELECTRICAL
1530 BIRCHMOUNT ROAD
SCARBOROUGH, ONTARIO
CANADA, M1P 2G9

DRAWING NO: **CSC34073** | REV: **B**

SHEET 1 OF 1

REV: 11/98