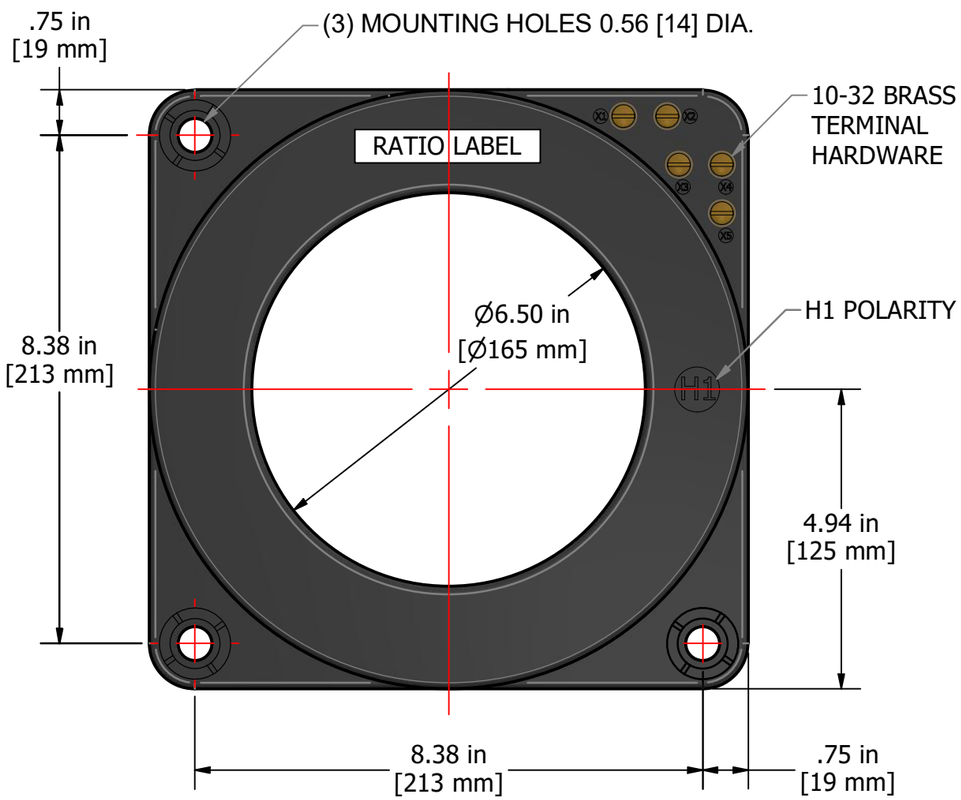

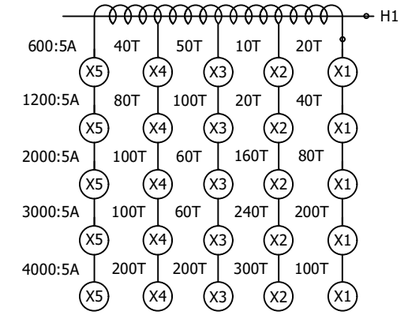

MULTI-RATIO CONNECTION DIAGRAM

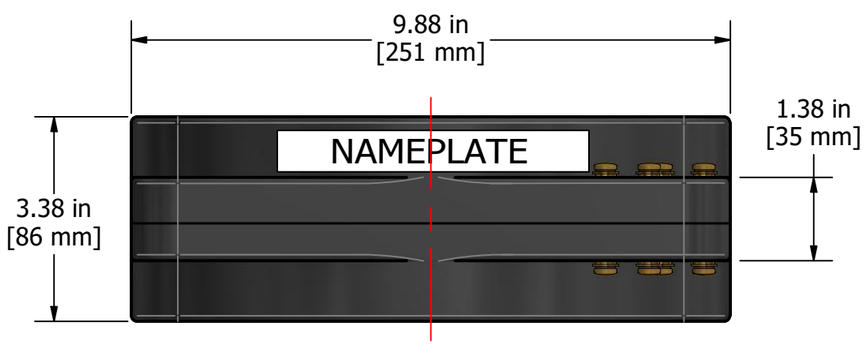

NOTES:
1. CORE & COIL ASSEMBLY IS ENCASED IN PLASTIC CASE.
2. TERMINALS ARE 10-32 BRASS SCREWS, WITH ONE FLAT, LOCK WASHER, ACCESSIBLE FROM EITHER SIDE.
3. APPROX. WEIGHT: 30 LBS.

ELECTRICAL SPECIFICATIONS:
- APPLICATION: RELAYING AND METERING
- INSULATION CLASS: 0.6kV, 10kV BIL. FULL WAVE
- STANDARD SECONDARY CURRENT: 5A
- RATED FREQUENCY: 60Hz
- MECHANICAL RATING: 180 x RATED CURRENT
- THERMAL RATING: 80 x RATED CURRENT, 1 sec.

CONTINUOUS THERMAL CURRENT RATING FACTOR:
- 50-1200 & 2000 PRIMARY AMPERES
  2.00 @ 30˚C AMBIENT, 1.5 @ 55˚C AMBIENT
- 1500-1600, 2500-3500 PRIMARY AMPERES
  1.50 @ 30˚C AMBIENT, 1.33 @ 55˚C AMBIENT
- 4000-5000 PRIMARY AMPERES
  1.0 @ 30˚C AMBIENT

CATALOGUE NUMBER	RATIO	IEEE RELAY CLASS	IEEE METERING CLASS				
			B-0.1	B-0.2	B-0.5	B-0.9	B-1.8
SINGLE-RATIO							
CTS-650SR-500	50:5		4.8	-	-	-	-
CTS-650SR-750	75:5	C10	4.8	4.8	-	-	-
CTS-650SR-101	100:5	C10	1.2	2.4	4.8	-	-
CTS-650SR-151	150:5	C20	0.6	1.2	2.4	2.4	4.8
CTS-650SR-201	200:5	C20	0.6	0.6	1.2	2.4	4.8
CTS-650SR-251	250:5	C20	0.6	0.6	0.6	1.2	2.4
CTS-650SR-301	300:5	C20	0.3	0.6	0.6	1.2	2.4
CTS-650SR-401	400:5	C50	0.3	0.3	0.6	0.6	1.2
CTS-650SR-501	500:5	C50	0.3	0.3	0.3	0.6	0.6
CTS-650SR-601	600:5	C100	0.3	0.3	0.3	0.3	0.6
CTS-650SR-751	750:5	C100	0.3	0.3	0.3	0.3	0.6
CTS-650SR-801	800:5	C100	0.3	0.3	0.3	0.3	0.3
CTS-650SR-102	1000:5	C100	0.3	0.3	0.3	0.3	0.3
CTS-650SR-122	1200:5	C200	0.3	0.3	0.3	0.3	0.3
CTS-650SR-152	1500:5	C200	0.3	0.3	0.3	0.3	0.3
CTS-650SR-162	1600:5	C200	0.3	0.3	0.3	0.3	0.3
CTS-650SR-202	2000:5	C200	0.3	0.3	0.3	0.3	0.3
CTS-650SR-252	2500:5	C200	0.3	0.3	0.3	0.3	0.3
CTS-650SR-302	3000:5	C200	0.3	0.3	0.3	0.3	0.3
CTS-650SR-322	3200:5	C200	0.3	0.3	0.3	0.3	0.3
CTS-650SR-352	3500:5	C200	0.3	0.3	0.3	0.3	0.3
CTS-650SR-402	4000:5	C200	0.3	0.3	0.3	0.3	0.3
CTS-650SR-502	5000:5	C200	0.3	0.3	0.3	0.3	0.3
MULTI-RATIO							
CTS-650MR-601	600:5	C100	0.3	0.3	0.3	0.6	0.6
CTS-650MR-122	1200:5	C200	0.3	0.3	0.3	0.3	0.3
CTS-650MR-202	2000:5	C200	0.3	0.3	0.3	0.3	0.3
CTS-650MR-302	3000:5	C200	0.3	0.3	0.3	0.3	0.3
CTS-650MR-402	4000:5	C200	0.3	0.3	0.3	0.3	0.3

REV	BY	DATE:	DESCRIPTION

CONFIDENTIAL and PROPRIETARY
This document and the information contained herein are the the exclusive property of Meramec Instrument Transformer Company. It shall be returned to Meramec Instrument Transformer Company upon request and shall not be reproduced in whole or in part, disclosed to anyone else, or used without the expressed written consent of Meramec Instrument Transformer Company.
THIS PRINT WAS CAD GENERATED

REFERENCE:

TITLE: LV CURRENT TRANSFORMER, INDOOR

TOLERANCES EXCEPT WHERE NOTED, IN [mm]
FRACT ± 1/16" 2 PL DEC. ± 0.06 [1.52]
ANGLE ± 1° 3 PL DEC. ± 0.005[0.127]

3rd. ANGLE PROJECTION

DRAWN: Jeff Harris — DATE: 3/29/2019
APPROVED: Antonio Ceballos — DATE: 4/24/2019

MERAMEC
Instrument Transformer Co.
1 Andrews Way, Cuba, Missouri 65453
Phone (573) 885 2521 Fax (573) 885 2543

LOCATION: \\MITMAIN\EngineeringSecure\Drawings\Outline Drawings\CTs Low Voltage Indoor - SWITCHGEAR\CTS-650.idw
DRAWING NUMBER: CTS-650
REV: 00 SH: 1 OF: 1