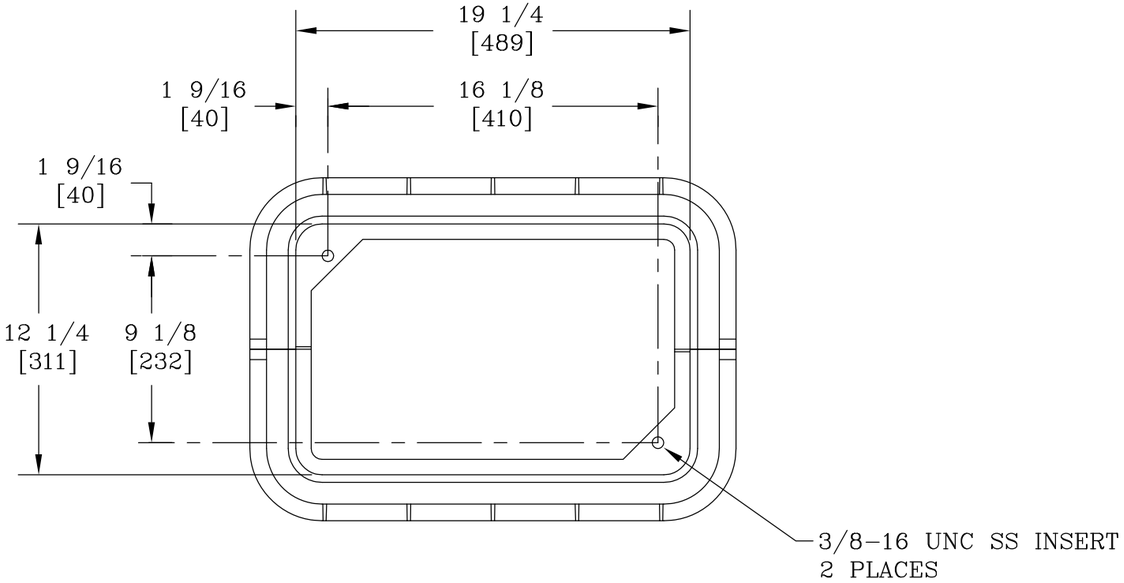

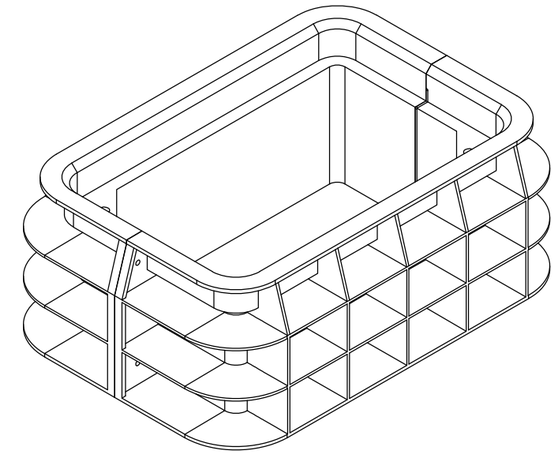

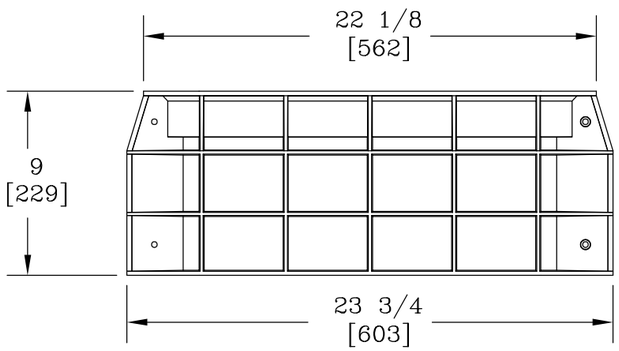

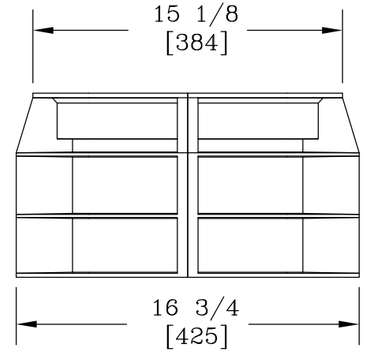

NOTES:

1. THIS BOX HAS A LOAD RATING OF 20,000 LBS. [88,960 N].

DIMENSIONS ARE IN INCHES OR MILLIMETERS IN BRACKETS UNLESS OTHERWISE NOTED.

	BY	DATE	WEIGHT		LOC
DRN	RJ	10/13/14	7.2# 3.3kg	Pencell PLASTICS — A SUBSIDIARY OF HUBBELL LENOIR CITY, INC 546 ENGLISH ROAD ROCKY MOUNT, NC 27804 800-257-9448 www.pencell.com	LC S
CHK			SCALE 1"=1'	DRAWING DESCRIPTION PENCELL® 11 X 18 X 09 ENCLOSURE	REV A
ENG					
APR			SIZE B		
APR					10/14
PROJECT NUMBER				SHEET 1 OF 1	DRAWING NUMBER DT111809GSN