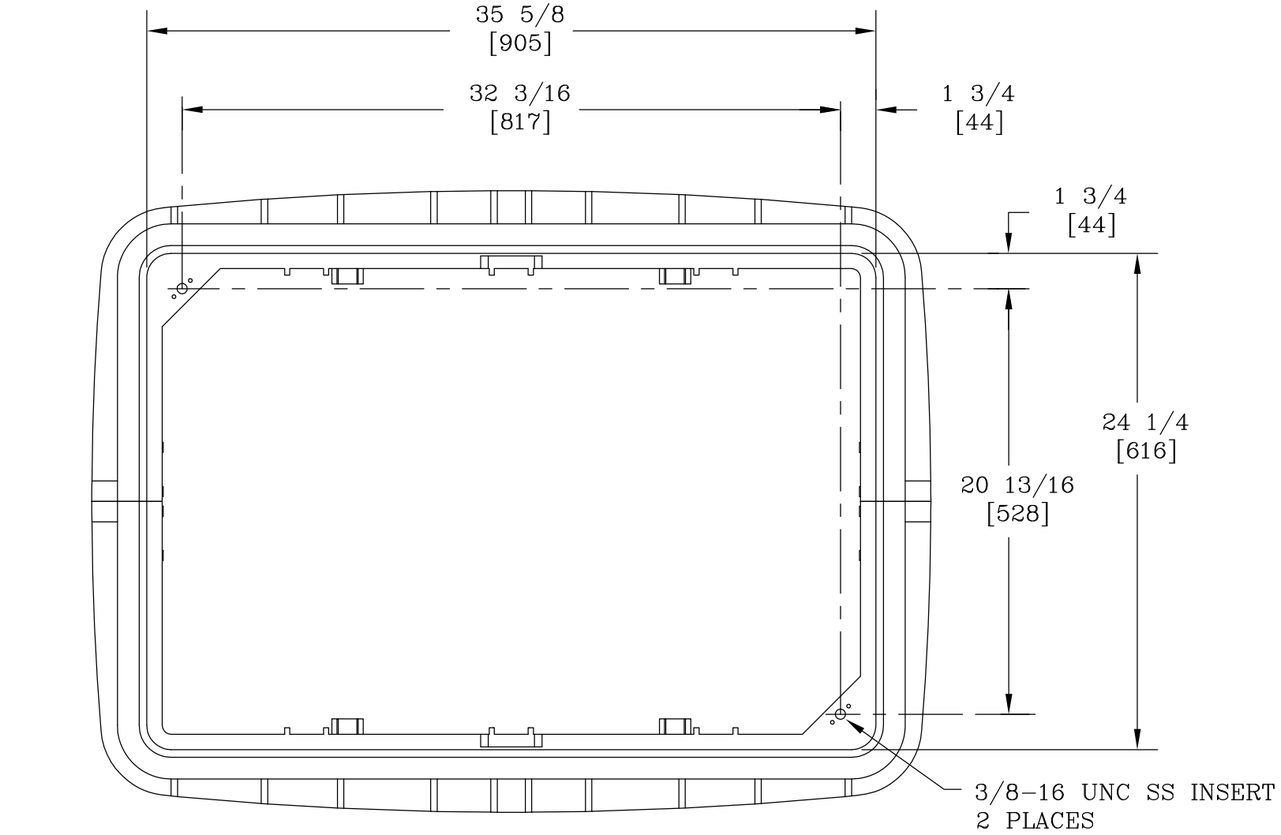

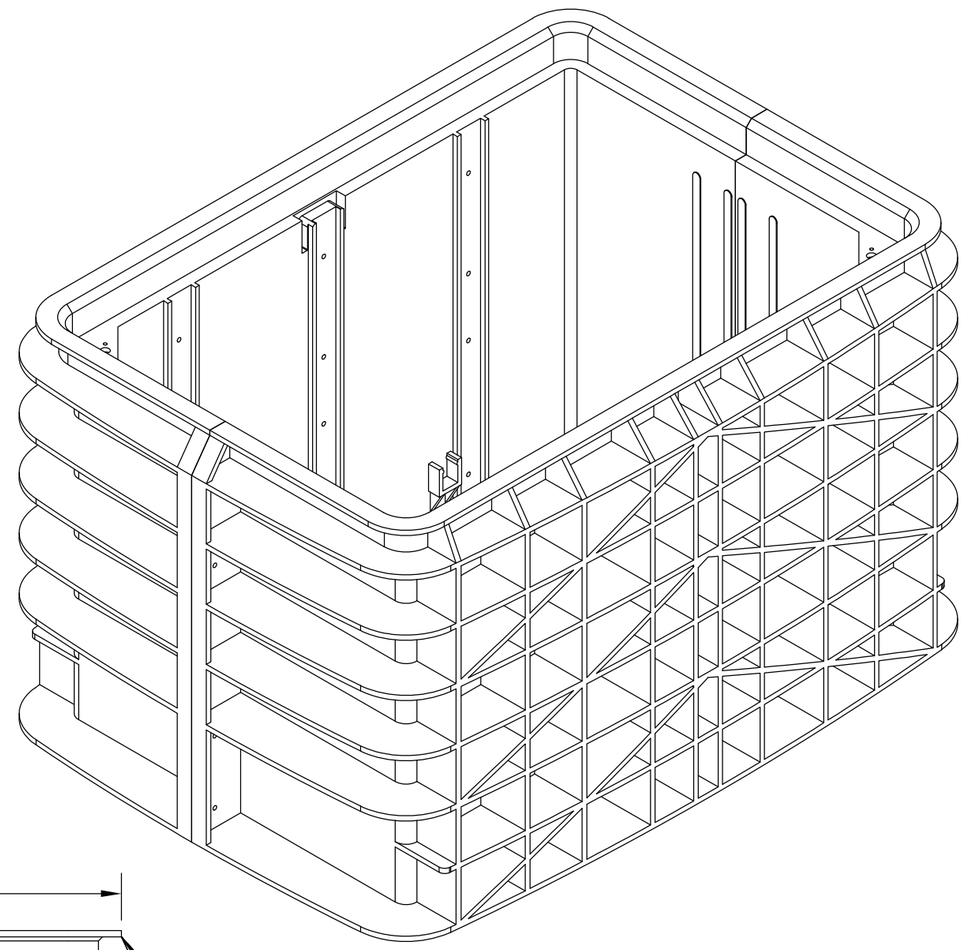

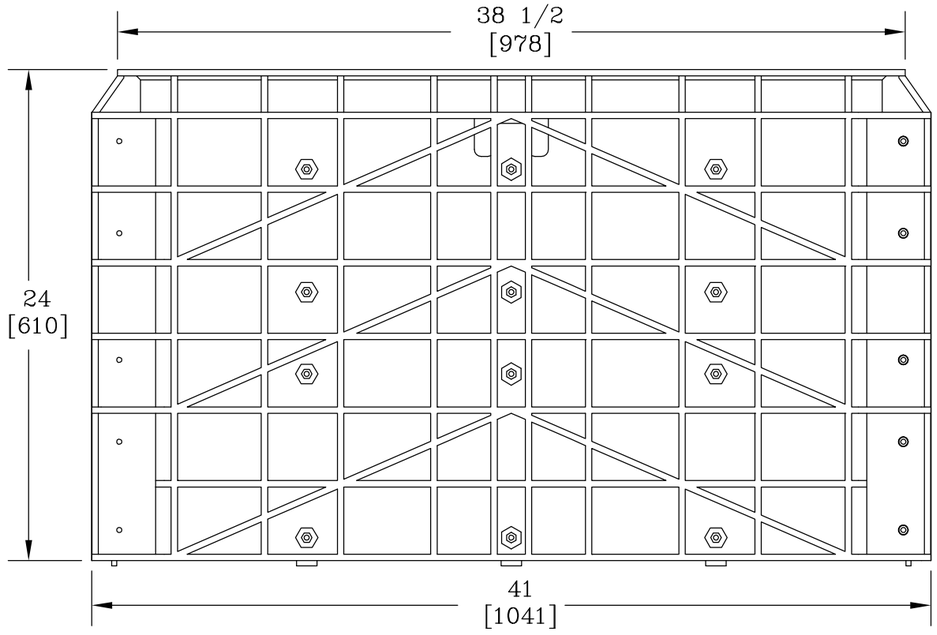

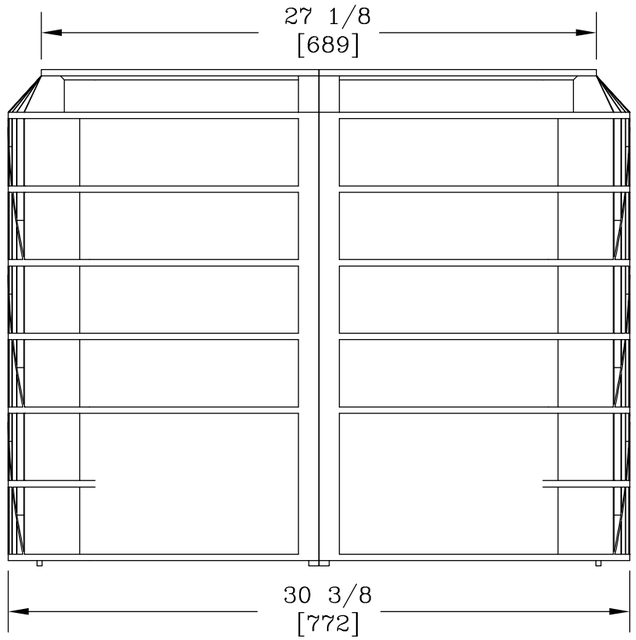

NOTES:

1. THIS BOX HAS A LOAD RATING OF TIER 15 WHEN USED WITH STEEL CROSS MEMBER.

DIMENSIONS ARE IN INCHES OR MILLIMETERS IN BRACKETS UNLESS OTHERWISE NOTED.

	BY	DATE
DRN	RJ	10/15/14
CHK		
ENG		
APR		
APR		

WEIGHT: 52# 23.6kg

SCALE: 1"=1'

SIZE: B

PROJECT NUMBER

PenCell PLASTICS — A SUBSIDIARY OF HUBBELL LENOR CITY, INC
546 ENGLISH ROAD
ROCKY MOUNT, NC 27804
800-257-9448
www.pencell.com

LOC: LC S

DRAWING DESCRIPTION
PENCELL® 24 X 36 X 24
ENCLOSURE

REV: A
10/14

SHEET 1 OF 1

DRAWING NUMBER
DT243624GSY