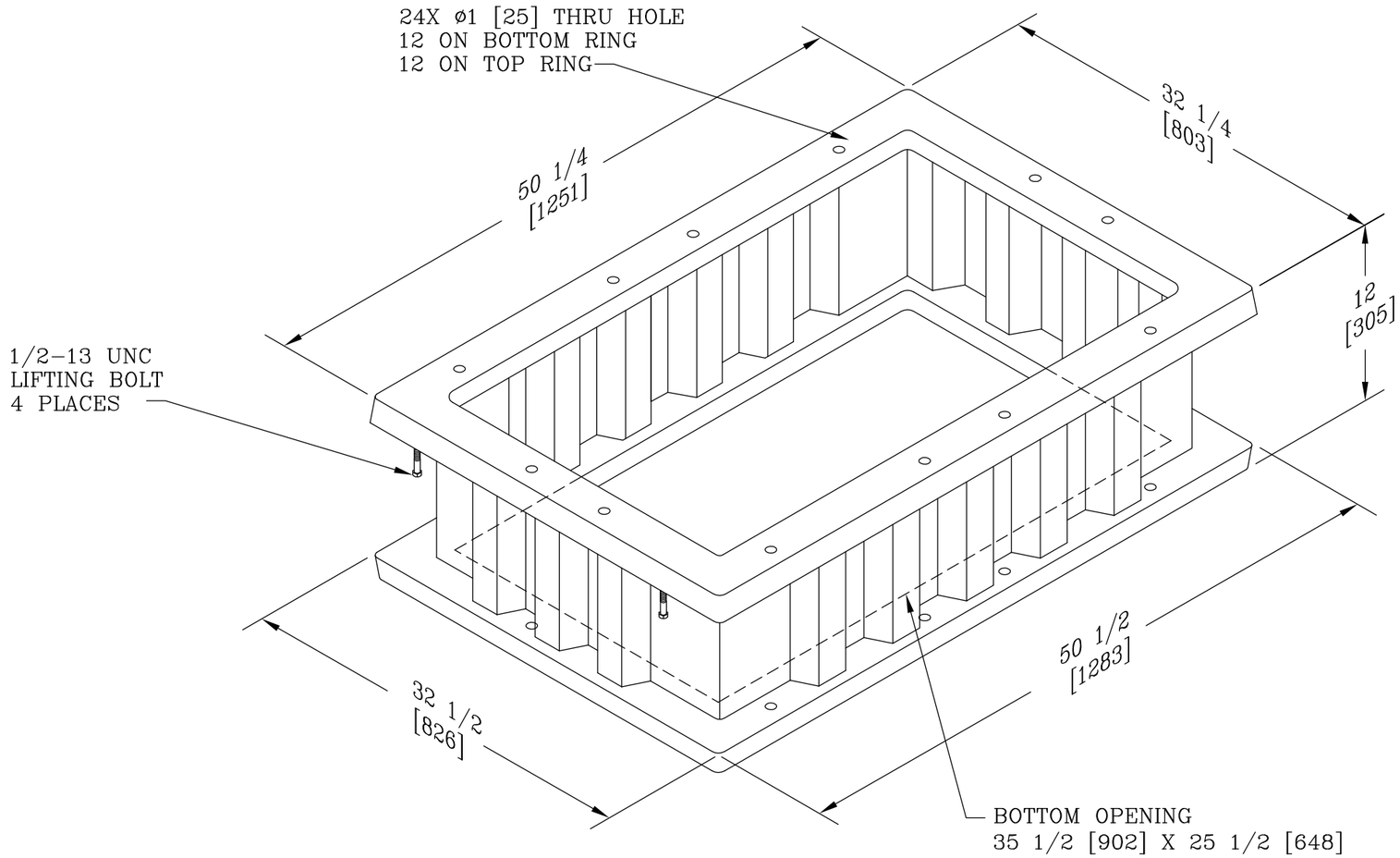

NOTES:

1. THIS BOX IS RATED FOR ANSI/SCTE 77 TIER 8 APPLICATIONS.

2. FURNISHED W/(4) 1/2-13 UNC X 8 [203] LONG SS HEX HEAD BOLTS, (8) ø1/2 SS FLAT WASHERS, AND (4) 1/2-13 UNC SS HEX NUTS.

DIMENSIONS ARE IN INCHES OR MILLIMETERS IN BRACKETS UNLESS OTHERWISE NOTED.

	BY	DATE	WEIGHT		LOC
DRN	BJV	4/1/13	111# 50kg	HUBBELL® 3621 INDUSTRIAL PARK DR LENOIR CITY, TN 37771 800-346-3062 www.quazite.com	LC S
CHK	JTP	5/1/13	SCALE NTS	DRAWING DESCRIPTION QUAZITE® 30 X 48 X 12 EXTENSION	REV A
ENG					
APR			SIZE B	STANDARD VERSION	4/13
APR					
PROJECT NUMBER				SHEET 1 OF 1	DRAWING NUMBER E0A304812A