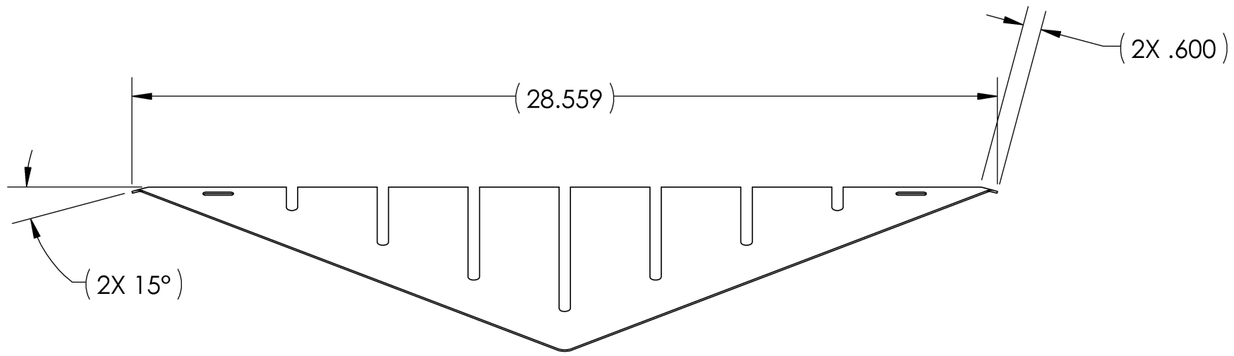

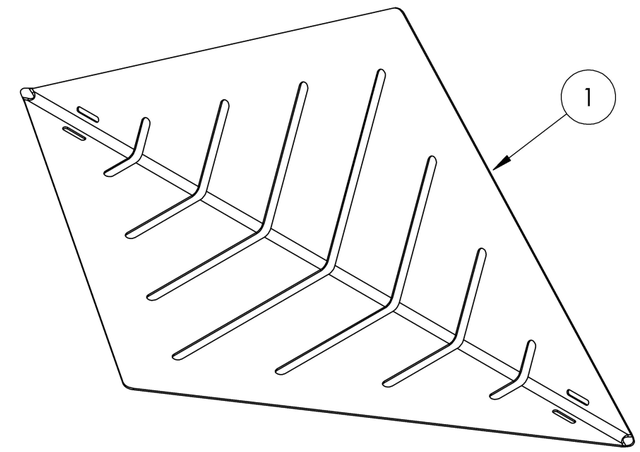

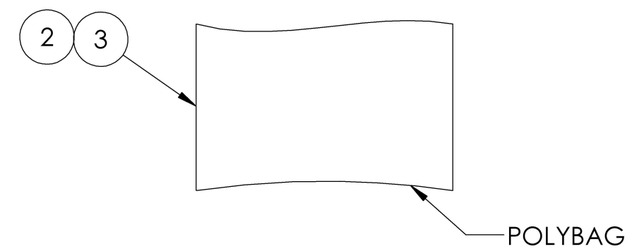

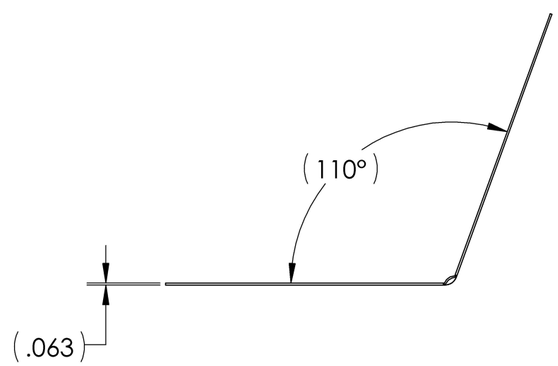

FOLD

ITEM NO.	PART NUMBER	DESCRIPTION	QTY.
3	C16SSLC	LASHED CABLE SUPPORT (NOT SHOWN IN DRAWING, PACKAGED IN POLY BAG)	2
2	CDLC	CLAMP, D LASHING (NOT SHOWN IN DRAWING, PACKAGED IN POLY BAG)	2
1	EM-02-001-0396-000	WIND DAMPER PLATE	1

NOTES:
1. BREAK ALL BURRS AND SHARP EDGES
2. SAME AS EM-05-001-2900-000

EC #	DATE	CHANGED BY	CHECKED BY	APPROVED BY
241223044851	01/15/25	MJ	SP	TOM

WEIGHT, LBS: N/A

EC DESCRIPTION:

REVISED PER ENGINEERING CHANGE

ADDITIONAL COMMENTS: -

UNLESS OTHERWISE SPECIFIED
TOLERANCES: (DECIMAL IN.)
.XX: ±.01; .XXX: ±.005; .XXXX: ±.0005
METRIC: (MM) .X: ±.25; .XX: ±.13
FRACTIONS: ±1/64"; ANGLES: ±2 DEG

THIRD ANGLE PROJECTION

CONFIDENTIAL:
THIS DRAWING AND ITS CONTENTS ARE CONFIDENTIAL AND THE EXCLUSIVE PROPERTY OF HUBBELL POWER SYSTEMS. NO PUBLICATION, DISTRIBUTION OR COPIES MAY BE MADE WITHOUT THE WRITTEN CONSENT OF HUBBELL POWER SYSTEMS. HUBBELL POWER SYSTEMS UNPUBLISHED ALL RIGHTS RESERVED UNDER THE COPYRIGHT LAWS

HUBBELL POWER SYSTEMS, Inc. EMC ELECTRIC MOTION CO., INC.

TITLE
AERIAL CABLE WIND DAMPER ALUMINUM

CATALOG NUMBER: -

SIZE	DWG NO.	MATERIAL/PART/ASSY NO.	REV
B	EM-ACWDA-19-916-K	EM-ACWDA-19-916-K	A

SCALE: NONE | DRN BY: Z.P. | DATE: 07/25/24 | SHEET 1 OF 1