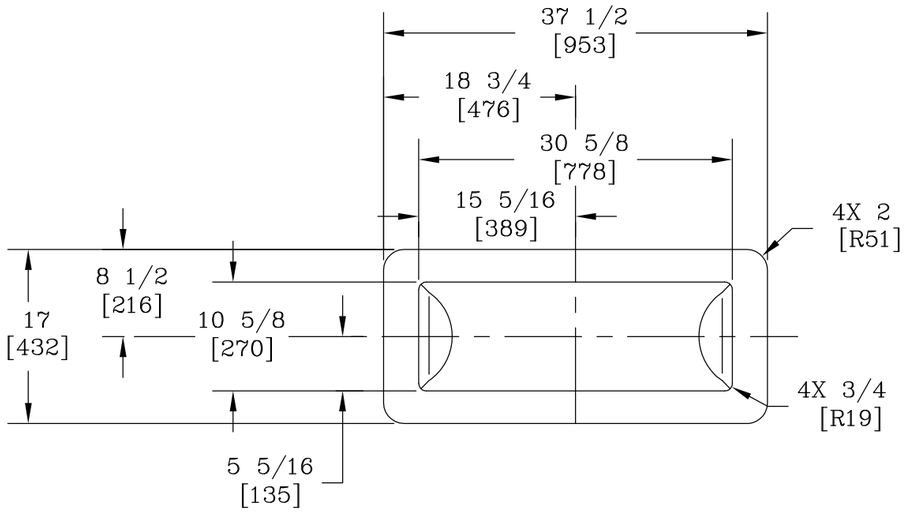

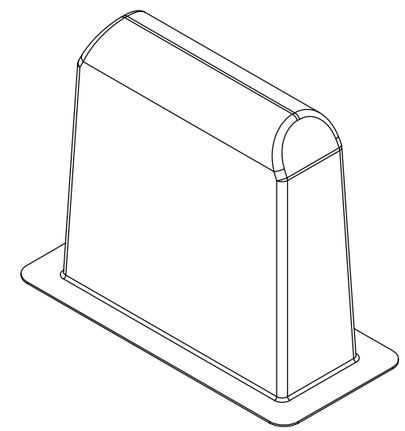

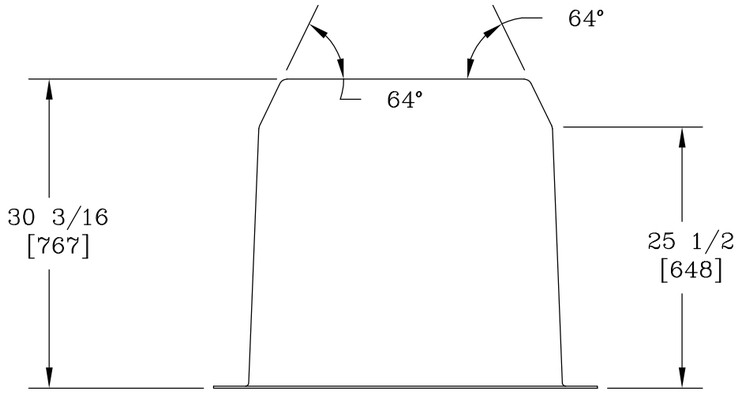

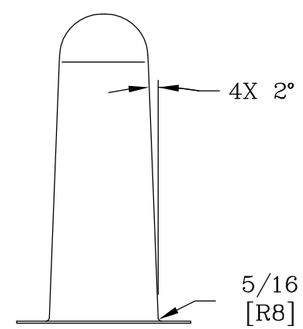

DIMENSIONS ARE IN INCHES OR MILLIMETERS IN BRACKETS UNLESS OTHERWISE NOTED.

	BY	DATE	WEIGHT		LOC
DRN	RJ	10/6/14	32 lbs 14.5kg	HUBBELL® 3621 INDUSTRIAL PARK DR LENOIR CITY, TN 37771 800-346-3062 www.quazite.com	LC S
CHK	MEF	10/6/14	SCALE 3/4"=1'	DRAWING DESCRIPTION PENCELL® FIBERGLASS LOOPING PEDESTAL	REV A
ENG					
APR			SIZE B		10/14
APR					
PROJECT NUMBER 110247				SHEET 1 OF 1	DRAWING NUMBER FLP3030