CATALOG	DESCRIPTION	"L1"	"L2"
HGBHF7	HIGH FLEX JUMPER,GRN/YLW,7",1PK	7.46	7
HGBHF9	HIGH FLEX JUMPER,GRN/YLW,9",1PK	9.46	9
HGBHF12	HIGH FLEX JUMPER,GRN/YLW,12",1PK	12.46	12
HGBHF14	HIGH FLEX JUMPER,GRN/YLW,14",1PK	14.46	14
HGBHF18	HIGH FLEX JUMPER,GRN/YLW,18",1PK	18.46	18
HGBHF24	HIGH FLEX JUMPER,GRN/YLW,24",1PK	24.46	24
HGBHF30	HIGH FLEX JUMPER,GRN/YLW,30",1PK	30.46	30

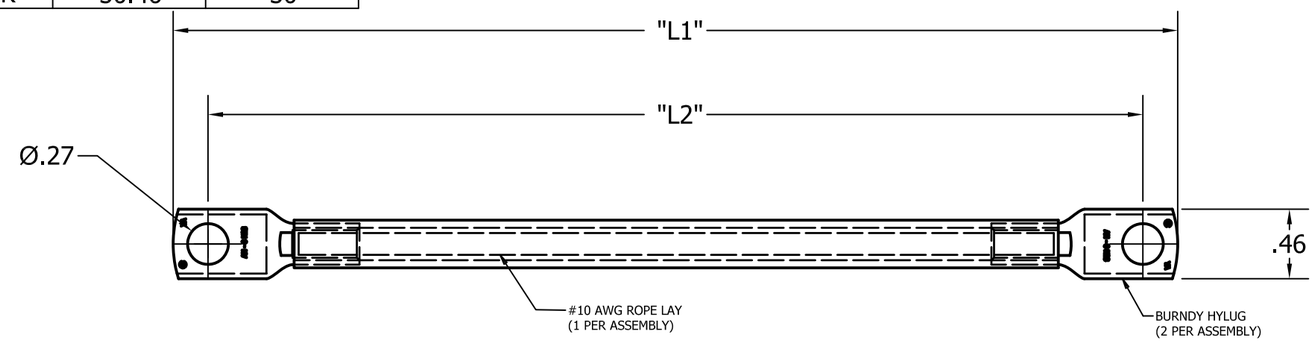

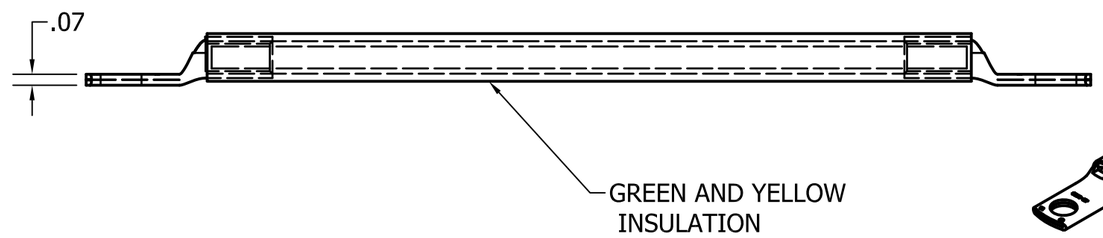

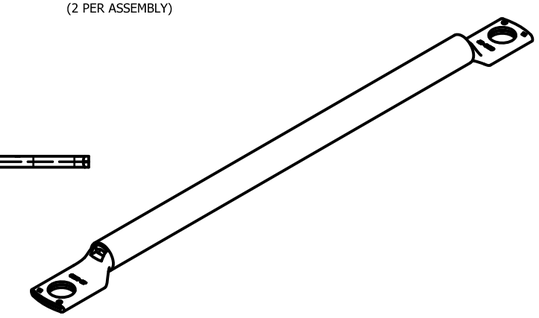

NOTES:

1. MATERIALS:
   ROPELAY - TIN PLATED COPPER
   LUG - TIN PLATED COPPER
   INSULATION - POLYEFIN

2. SPECIFICATIONS SUBJECT TO CHANGE WITHOUT NOTICE.

REV.	ECN	DATE	DESCRIPTION	CHG BY	APPD BY
2	22548	01/08/18	ADDED NEW SIZES	MMA	DPO

Created on INVENTOR

DIMENSIONING AND TOLERANCE
PER ANSI Y14.5M-1982
UNLESS OTHERWISE SPECIFIED,
DIMENSIONS ARE IN INCHES (MM).
TOLERANCES.XX = ±.01 (.25)
.XXX = ±.005 (.127)
.XXXX = ±.0025 (.0635)
ANGLE TOL ±1°

IN ACCEPTING OUR DRAWINGS, BLUEPRINTS, OR SUPPORTING DOCUMENTATION FOR QUOTATION OR OTHER PURPOSES, YOU AGREE NOT TO DISCLOSE TO OTHERS THE IDEAS, INFORMATION, OR DESIGNS SHOWN HEREIN, AND THAT YOU WILL MAKE NO USE OF SAME WITHOUT PERMISSION

PROJECT REFERENCE: 001-17

MATERIAL: SEE NOTE 1

DRAWN BY: D.O'CONNOR 1/11/17

CHECKED BY:

APPROVED BY:

Hubbell Premise Wiring
HUBBELL INCORPORATED (Delaware)
23 CLARA DRIVE, SUITE 103 MYSTIC, CT 06355

TITLE: HIGH FLEX JUMPER

SIZE: B

DRAWING NO. HWS14723C

REV. 2

SCALE: NTS

SHEET 1 OF 1