CATALOG NUMBERS	DESCRIPTION	DIM. "A"	DIM. "B"	DIM. "C"
OFPNL1U2SP	PANEL WITH 2 FSP OPENINGS	9.00	N/A	5.00
OFPNL1U3SP	PANEL WITH 2 FSP OPENINGS	10.25	5.13	4.38

NOTES:

1. PANEL ACCEPTS FIBER CASSETES AND SIX-PACK ADAPTERS
2. SURFACE FINISH: BLACK POWDER COAT
3. HARDWARE PACK INCLUDES:
   (4) #12-24 X 5/8 PHILIPS SCREW
   (4) #12 NYLON WASHER
4. SPECIFICATIONS SUBJECT TO CHANGE WITHOUT NOTICE.

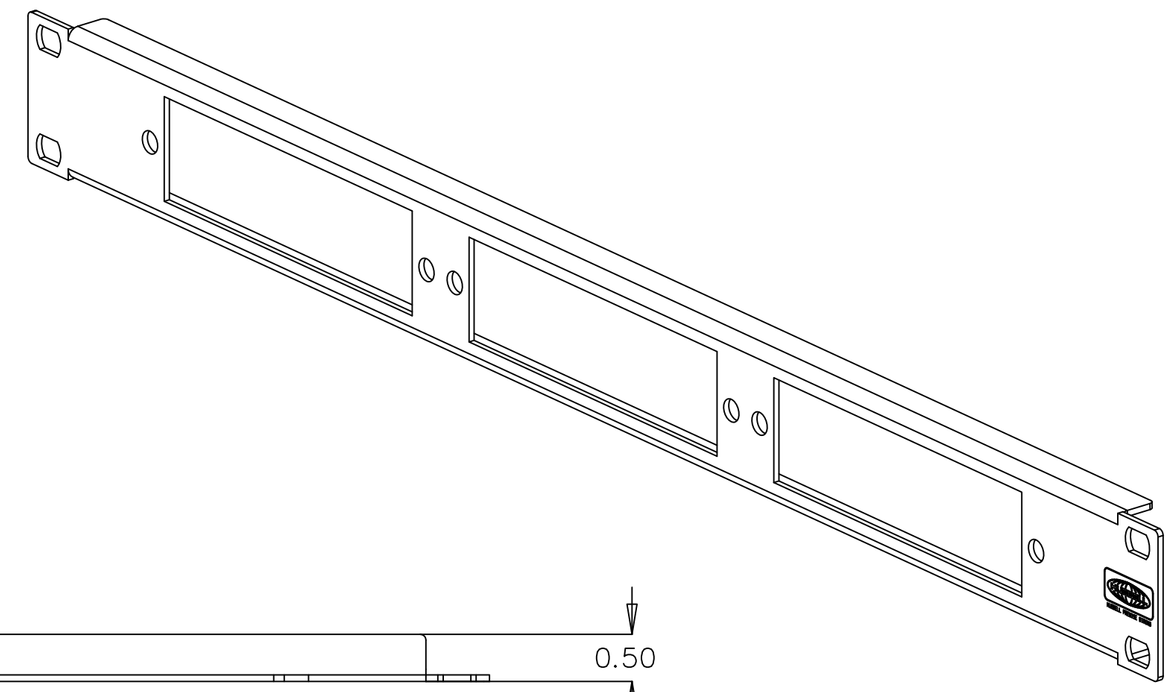

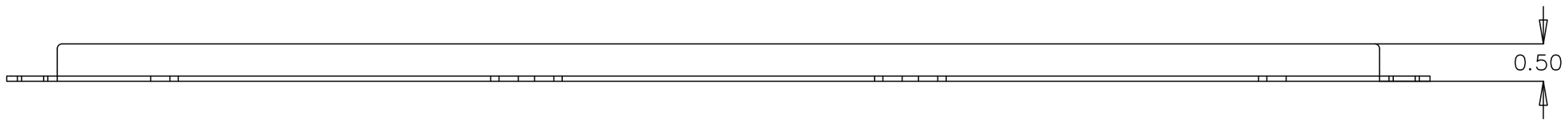

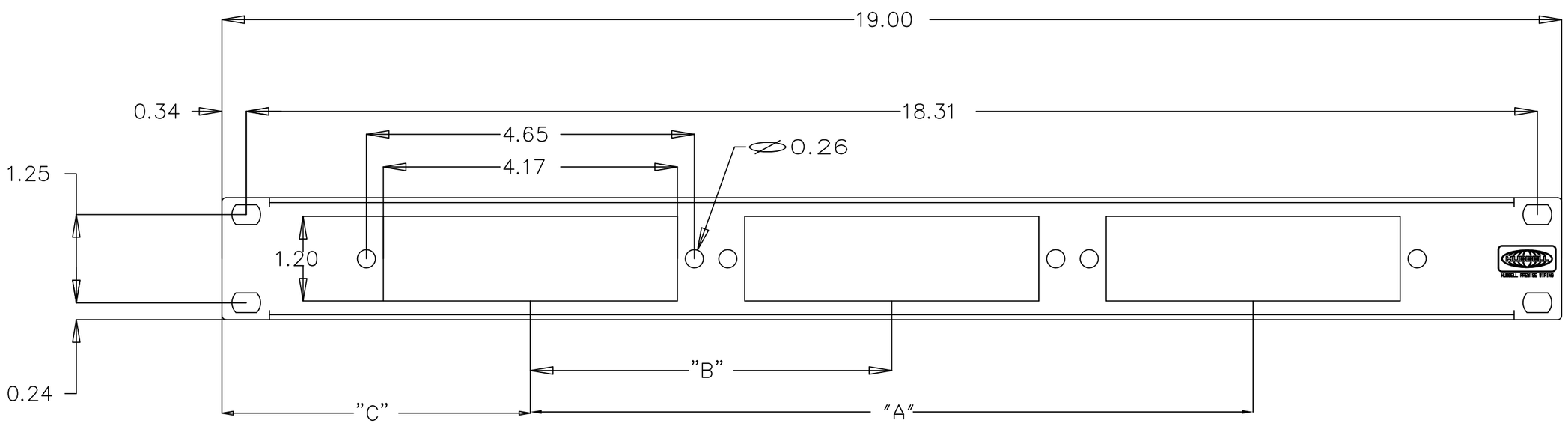

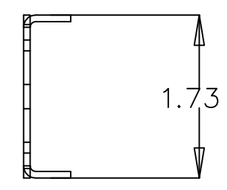

REV.	ECN	DATE	DESCRIPTION	CHG BY	APPD BY
1	17841	01/19/12	INITIAL RELEASE	MMA	

Created on AUTOCAD

DIMENSIONING AND TOLERANCE PER ANSI Y14.5M-1982
UNLESS OTHERWISE SPECIFIED, DIMENSIONS ARE IN INCHES (MM).
TOLERANCES
.X = ±.03 (.8)
.XX = ±.02 (.4)
.XXX = ±.010 (.25)
ANGLE TOL ±1°

IN ACCEPTING OUR DRAWINGS, BLUEPRINTS, OR SUPPORTING DOCUMENTATION FOR QUOTATION OR OTHER PURPOSES, YOU AGREE NOT TO DISCLOSE TO OTHERS THE IDEAS, INFORMATION, OR DESIGNS SHOWN HEREIN, AND THAT YOU WILL MAKE NO USE OF SAME WITHOUT PERMISSION

PROJECT REFERENCE: 004-12

MATERIAL: SEE NOTES

DRAWN BY: M. ABBY 01/19/12

CHECKED BY:

APPROVED BY:

Hubbell Premise Wiring
HUBBELL INCORPORATED (Delaware)
14 Lord's Hill Road, Stonington, Connecticut 06378

TITLE: 19" FIBER PANEL WITH FSP OPENINGS

SIZE: C | DRAWING NO.: HWS14002C | REV.: 1

SCALE: N/A | SHEET 1 OF 1