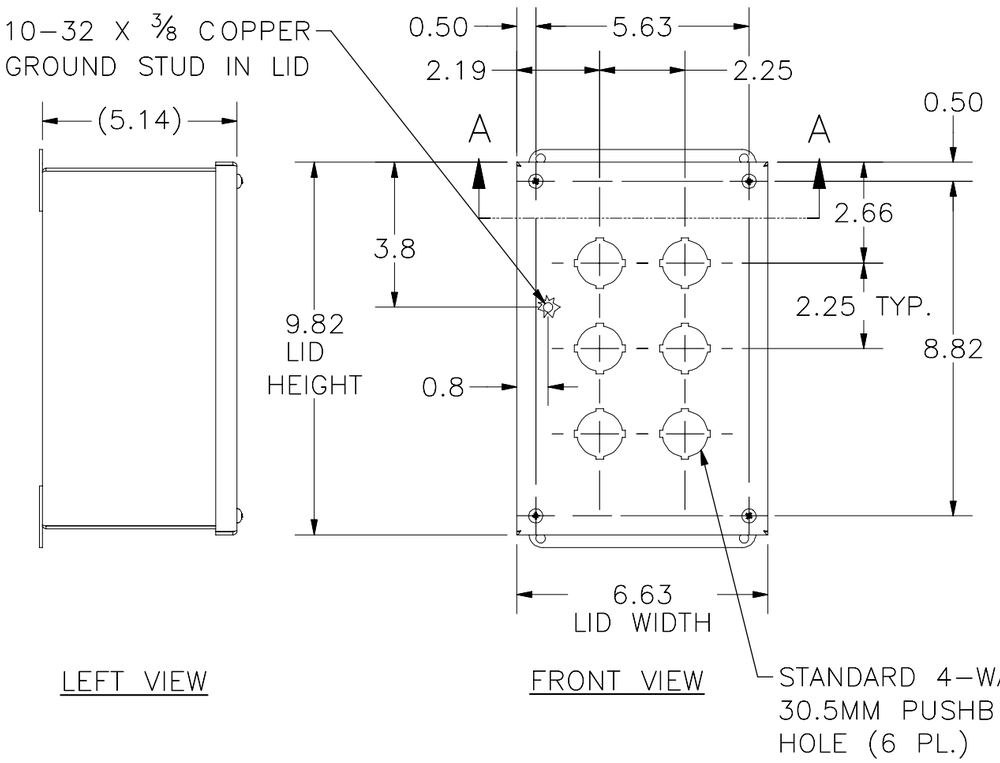

LEFT VIEW

FRONT VIEW

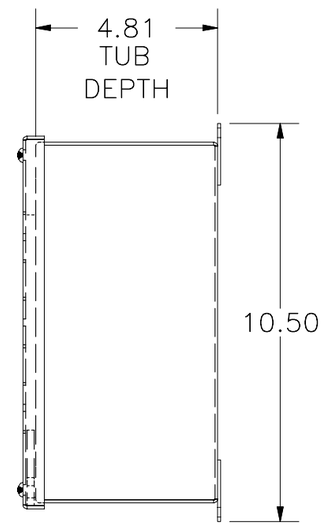

RIGHT VIEW

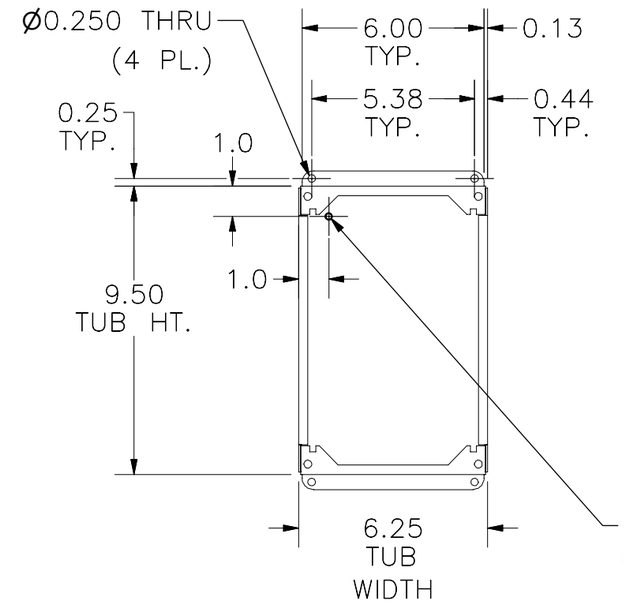

FRONT VIEW TUB

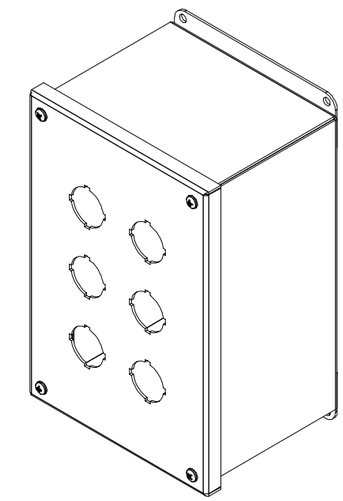

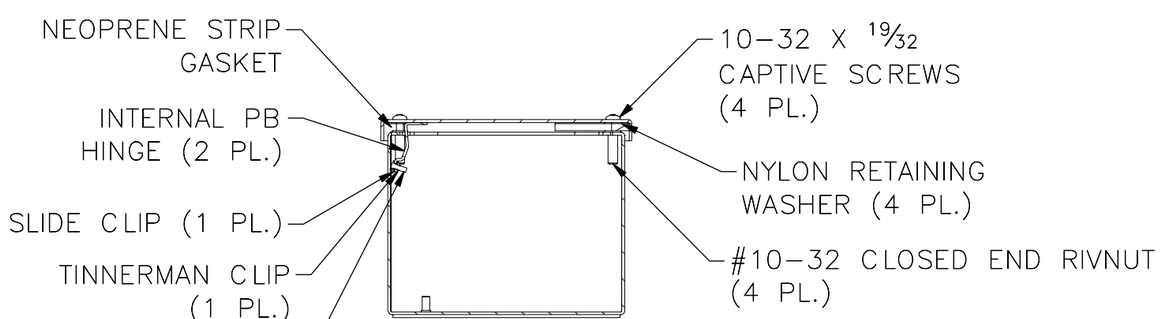

SECTION A-A
(INSIDE TOP OF ENCL.)

PART#: PBXD6
(DATA SUBJECT TO CHANGE WITHOUT NOTICE)

THIS DRAWING IS PROPERTY OF HUBBELL INC. WIEGMANN
ALL INFORMATION IS PROPRIETARY AND NOT TO BE DUPLICATED