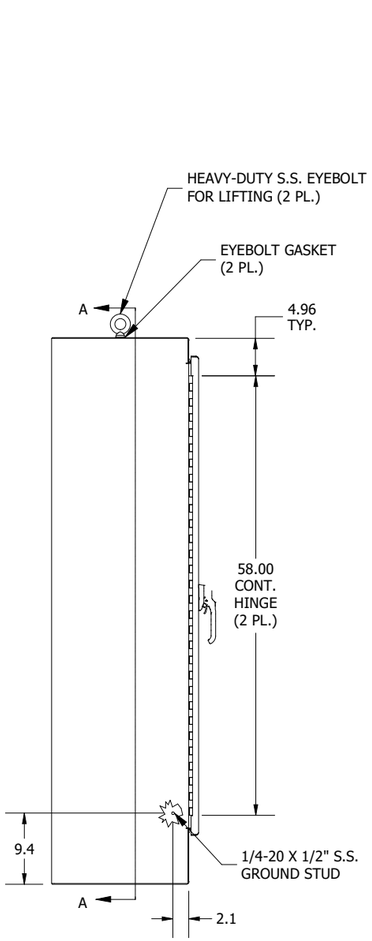

LEFT SIDE VIEW

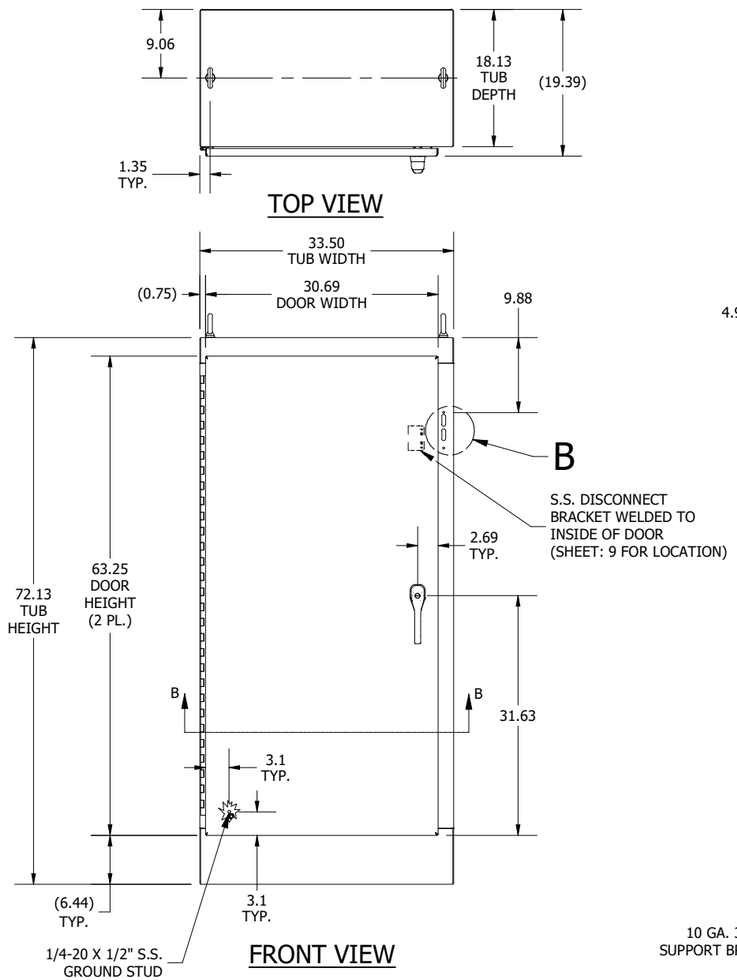

TOP VIEW

FRONT VIEW

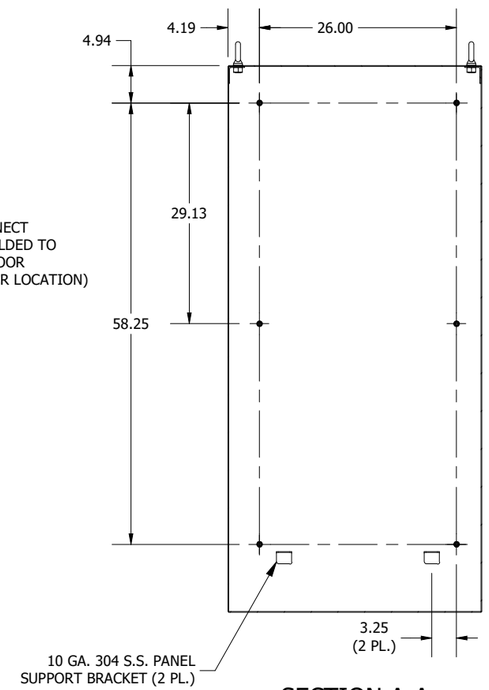

SECTION A-A
(INSIDE BACK OF ENCL.)

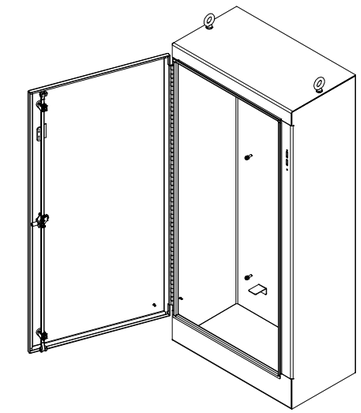

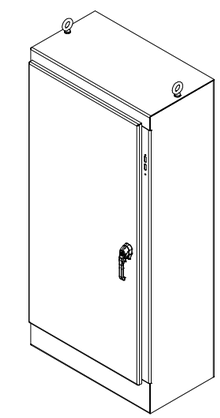

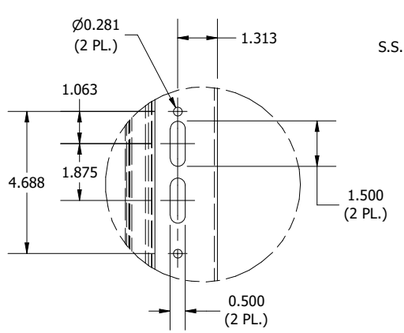

DETAIL B
(DISCONNECT CUTOUT DETAIL)

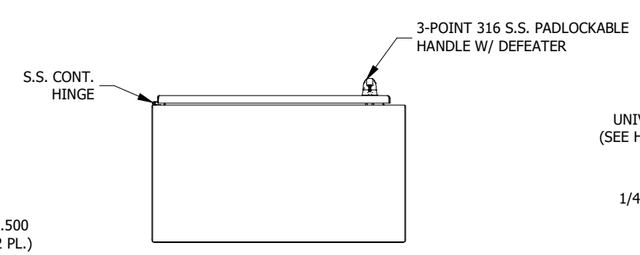

BOTTOM VIEW

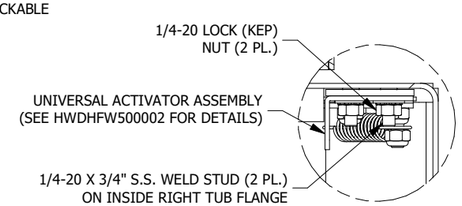

DETAIL A
(UNIV. ACTIVATOR INSTALL)

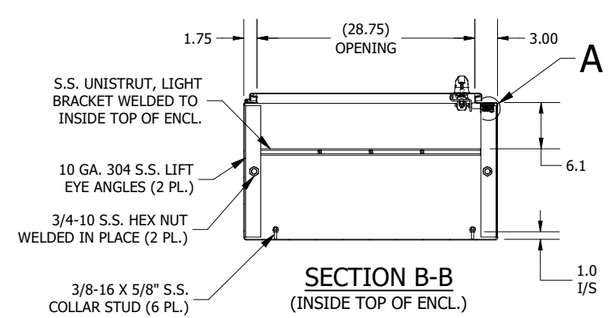

SECTION B-B
(INSIDE TOP OF ENCL.)

PART #:WA72XM3318SSN4
(DATA SUBJECT TO CHANGE WITHOUT NOTICE)

THIS DRAWING IS THE PROPERTY OF HUBBELL INC. WIEGMANN
ALL INFORMATION IS PROPRIETARY AND NOT TO BE DUPLICATED