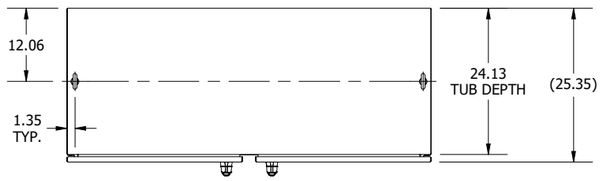

TOP VIEW

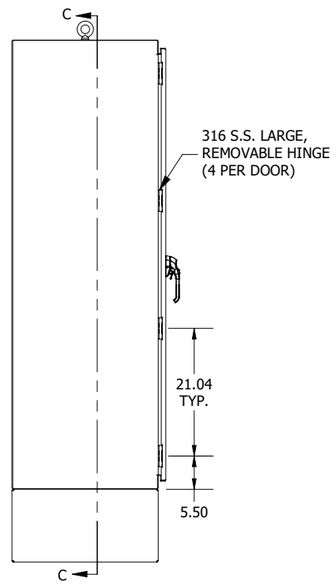

LEFT SIDE VIEW

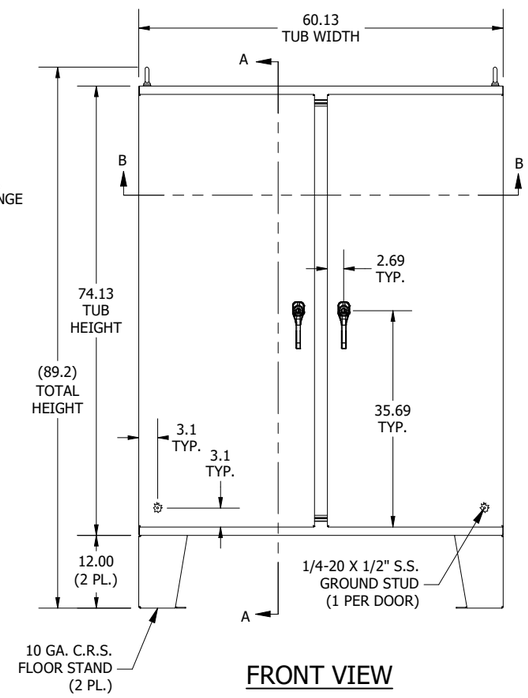

FRONT VIEW

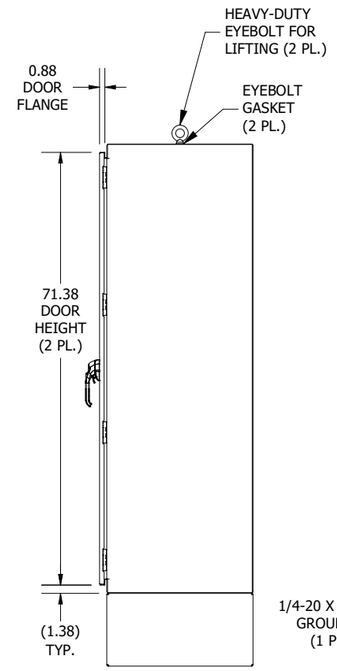

RIGHT SIDE VIEW

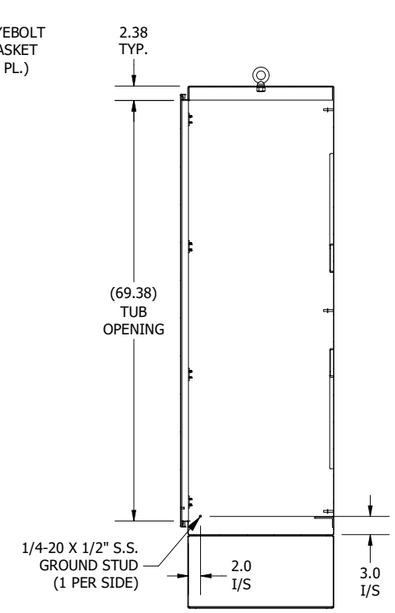

SECTION A-A
(INSIDE LEFT OF ENCL.)

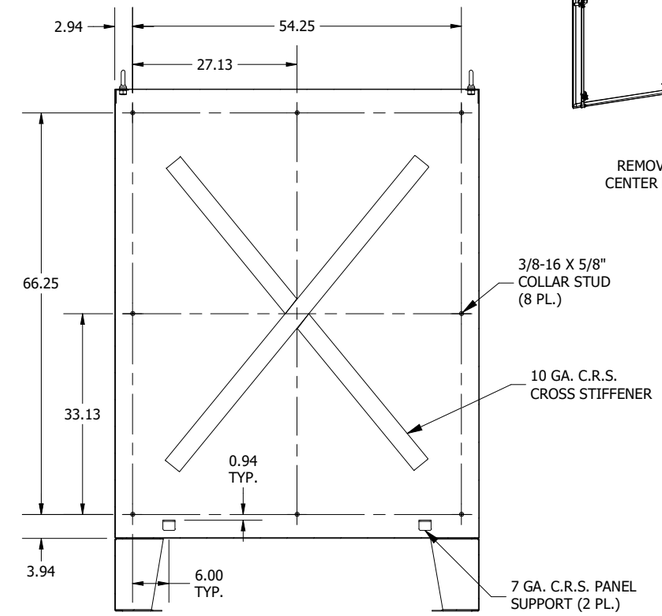

SECTION C-C
(INSIDE BACK OF ENCL.)

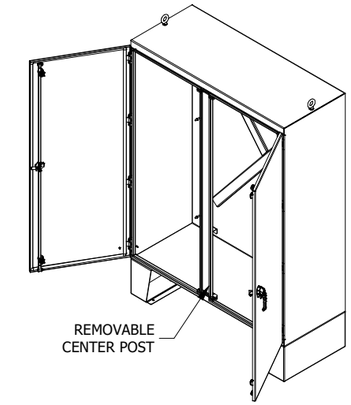

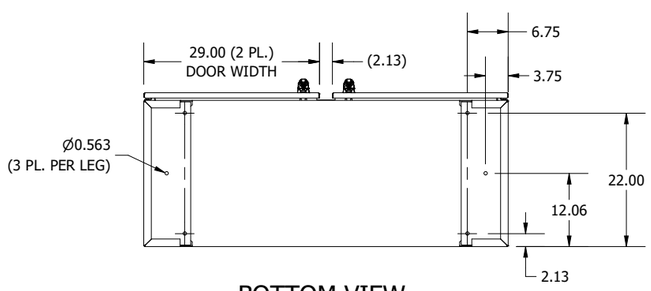

BOTTOM VIEW

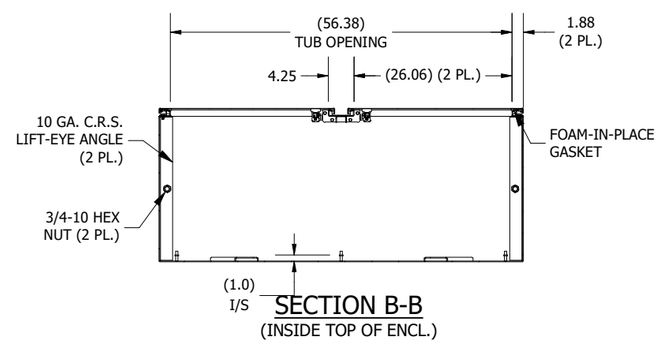

SECTION B-B
(INSIDE TOP OF ENCL.)

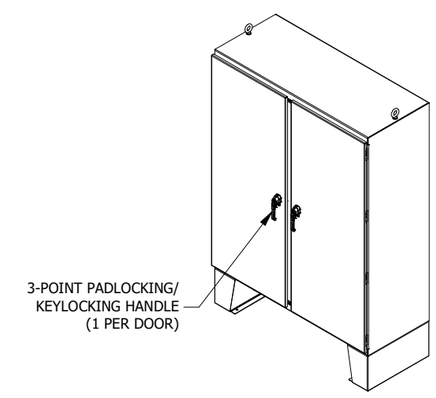

PART #:WRD746024N4D3PT
(DATA SUBJECT TO CHANGE WITHOUT NOTICE)

THIS DRAWING IS THE PROPERTY OF HUBBELL INC. WIEGMANN
ALL INFORMATION IS PROPRIETARY AND NOT TO BE DUPLICATED