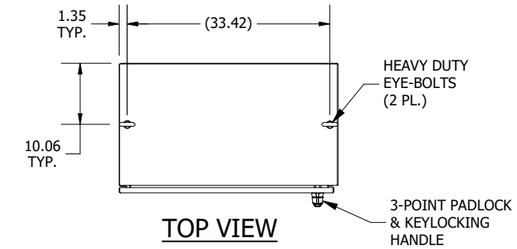

TOP VIEW

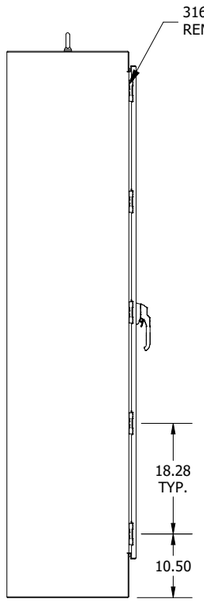

LEFT SIDE VIEW

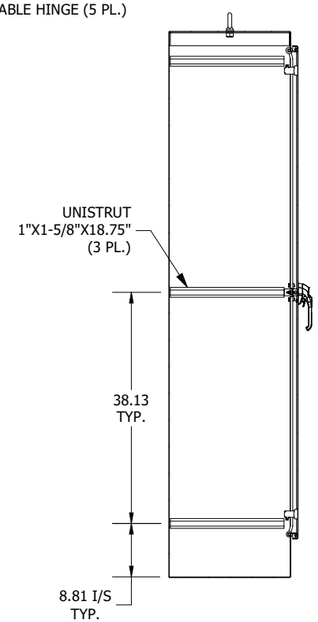

SECTION A-A
(INSIDE RIGHT OF ENCL.)

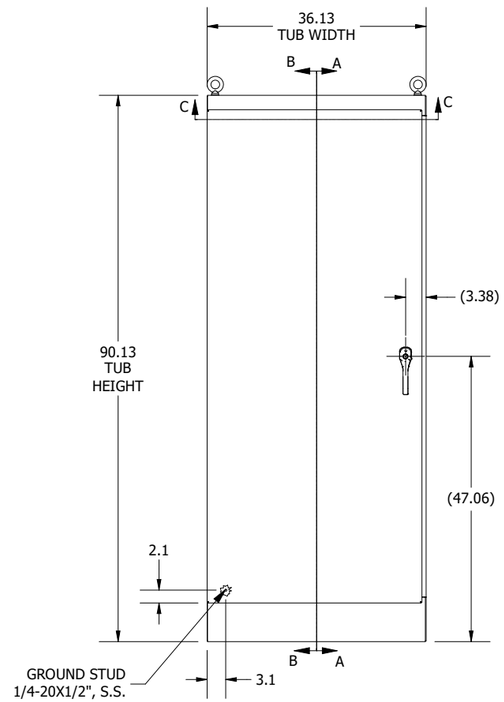

FRONT VIEW

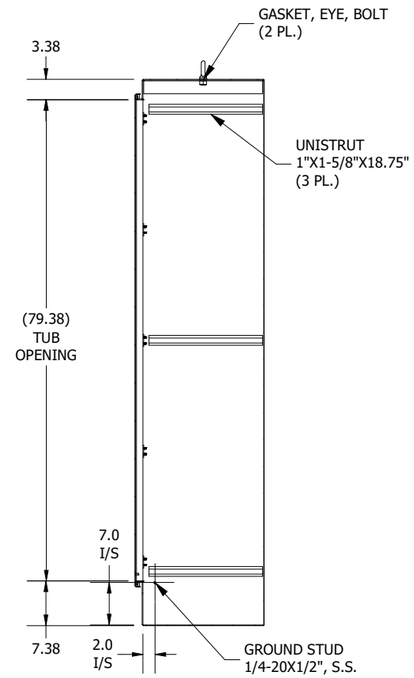

SECTION B-B
(INSIDE LEFT OF ENCL.)

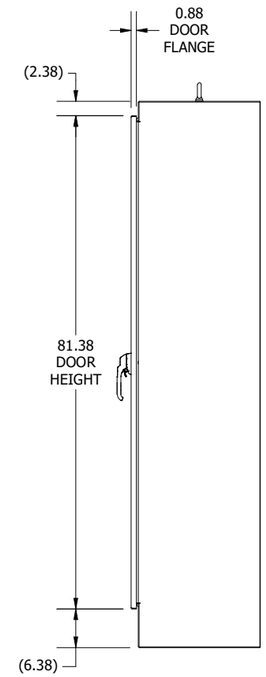

RIGHT SIDE VIEW

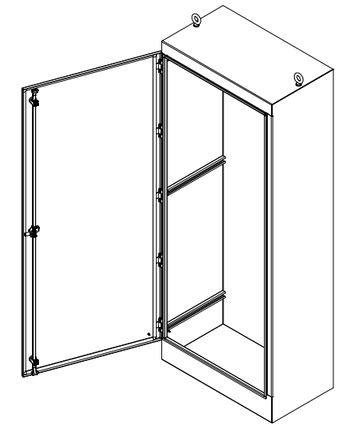

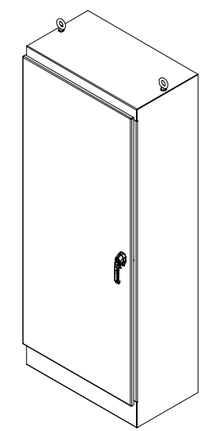

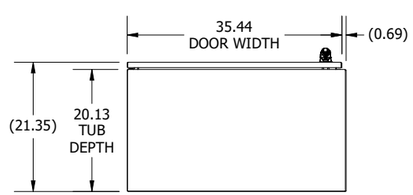

BOTTOM VIEW

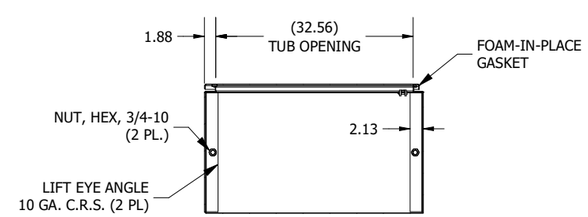

SECTION C-C
(INSIDE TOP VIEW OF ENCLOSURE)

PART #:WRD903620FS4
(DATA SUBJECT TO CHANGE WITHOUT NOTICE)

THIS DRAWING IS THE PROPERTY OF HUBBELL INC. WIEGMANN
ALL INFORMATION IS PROPRIETARY AND NOT TO BE DUPLICATED