HWS14888C | 2

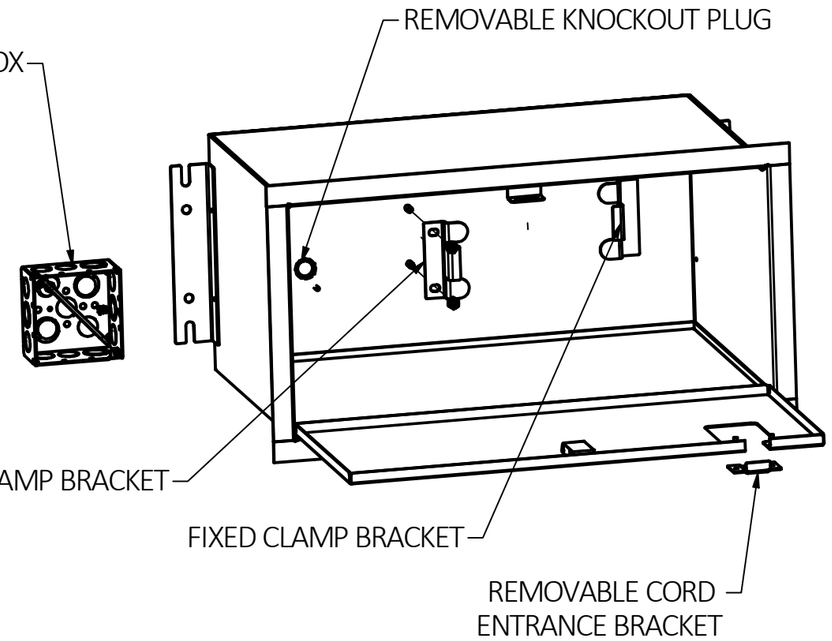

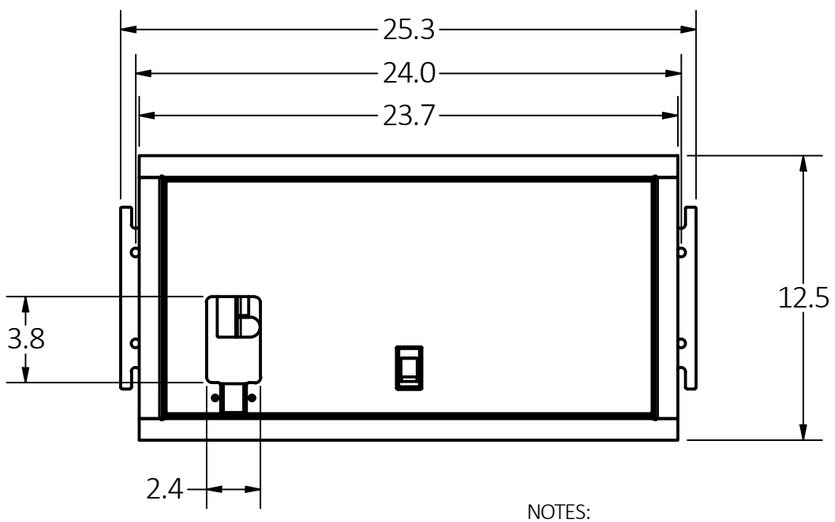

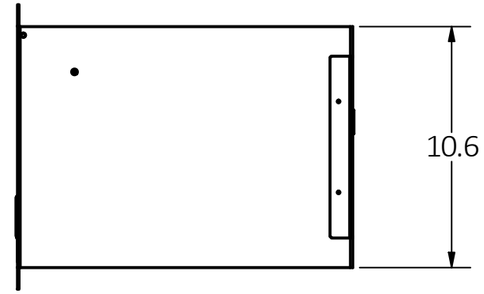

NOTES:

1. ENCLOSURE ACCEPTS InREACH CORD REEL HBLI4xxxx.

2. SURFACE FINISH: WHITE POWDER COAT

3. THE FOLLOWING ITEMS SHIP LOOSE WITH THE ENCLOSURE:
   (1) 4IN SQ. ELECTRICAL BOX
   (1) HWS77208201, INSTRUCTION SHEET

4. MAX. LOAD CAPACITY 75lb.

5. UL 2416 LISTED; CAN/CSA C22.2 No 60950-1-07, COMPLIANT WITH PLENUM REQUIREMENTS PER NEC300.22

6. SPECIFICATIONS SUBJECT TO CHANGE WITHOUT NOTICE.

LIST OF PARTS

DESCRIPTION	MATERIAL	FINISH
CEILING ENCLOSURE	STEEL	WHITE

REV	DESCRIPTION	APP	DATE
1	NEW RELEASE PER ECN 23836	MMA	05/05/20
2	REVISED NOTE 5 PER ECN 201022001695	AK	10/23/20

THE DESIGN AND DIMENSIONS OF THE PRODUCT SHOWN ON THIS DRAWING ARE SUBJECT TO CHANGE WITHOUT NOTICE. DIMENSIONS ARE IN INCHES [mm].

TITLE

CEILING ENCLOSURE, PLENUM, ACCEPTS CORD REEL

WIRING DEVICE-KELLEMS
HUBBELL INCORPORATED
SHELTON, CT

TOLERANCES UNLESS OTHERWISE SPECIFIED
.XX = ± .01
.XXX= ± .005
ANGLE TOL. ±2°

DR. BY MABBY | SCALE .15
CHK. BY | DATE

CAGE CODE 74545

DIMENSION SHEET FOR CAT. NO.
HBLIPRBOX

B

HWS14888C

2