FIBER TYPE	CABLE COLOR	CONNECTOR TYPE	LC CONNECTOR COLOR	MPO CONNECTOR COLOR	CABLE OUTER DIAMETER(mm)
NON ARMORED,INDOOR,12F,OS2 SINGLE MODE	YELLOW	MPO-LC	BLUE	GREEN	3.0
NON ARMORED,INDOOR,12F,OM4 MULTIMODE	AQUA	MPO-LC	BEIGE	AQUA	3.0
NON ARMORED,INDOOR/OUTDOOR,12F,OS2 SINGLE MODE	BLACK	MPO-LC	BLUE	GREEN	4.8
NON ARMORED,INDOOR/OUTDOOR,12F,OM4 MULTIMODE	BLACK	MPO-LC	BEIGE	AQUA	4.8

ITEM NO.	DESCRIPTION	QUANTITY
1	LC CONNECTOR	6
2	MPO CONNECTOR	1
3	FIBER CABLE	1ft -2000 ft
4	P/N-DATACODE LABEL	1

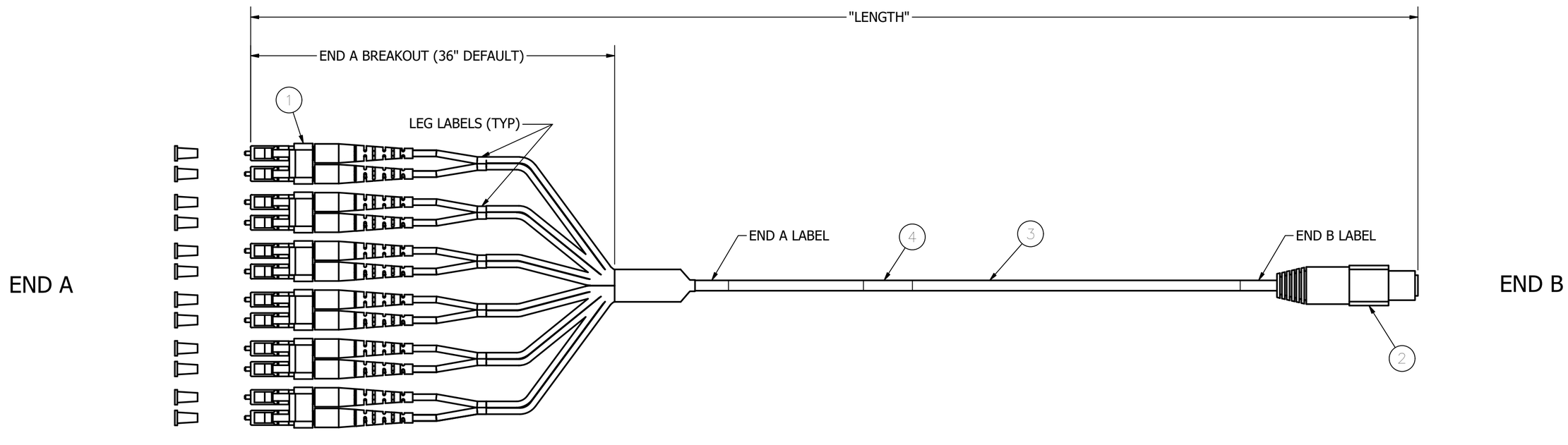

NOTES:

1. CONNECTOR OPTICAL, MECHANICAL AND ENVIRONMENTAL PERFORMANCE MEETS TIA/EIA-568-C.3 SPECIFICATIONS.
2. CONNECTOR HOUSING IS INJECTION MOLDED ENGINEERING PLASTIC RESIN.
3. OPTICAL INSERTION LOSS TEST DATA INCLUDED WITH EACH PATCH CORD.
4. PULLING EYE SLEEVE IS OPTIONAL.SPECIFY END A OR END B. WHEN USED, CONNECTORS ARE STAGGERED.
5. SPECIFICATIONS SUBJECT TO CHANGE WITHOUT PRIOR NOTICE.

REV.	ECN	DATE	DESCRIPTION	CHG BY	APPD BY
1	XXXX	07/14/24	INITIAL RELEASE	RSS	MMA

Created on INVENTOR

DIMENSIONING AND TOLERANCE PER ANSI Y14.5M-1982
UNLESS OTHERWISE SPECIFIED, DIMENSIONS ARE IN INCHES (MM).
TOLERANCES.XX = ±.01 (.25)
.XXX = ±.005 (.127)
.XXXX = ±.0025 (.0635)
ANGLE TOL ±1°

IN ACCEPTING OUR DRAWINGS, BLUEPRINTS, OR SUPPORTING DOCUMENTATION FOR QUOTATION OR OTHER PURPOSES, YOU AGREE NOT TO DISCLOSE TO OTHERS THE IDEAS, INFORMATION, OR DESIGNS SHOWN HEREIN, AND THAT YOU WILL MAKE NO USE OF SAME WITHOUT PERMISSION

PROJECT REFERENCE:

MATERIAL: SEE NOTES

DRAWN BY: S.RUBAN 07/02/24

CHECKED BY:

APPROVED BY:

HUBBELL®
Premise Wiring
HUBBELL INCORPORATED (Delaware)
23 CLARA DRIVE, SUITE 103 MYSTIC, CT 06355

TITLE: NON ARMORED FIBER PATCH CORDS, 12F, MPO-LC,PL

SIZE: C
DRAWING NO.: HWS1532501C
REV.: 1
SCALE: NTS
SHEET 1 OF 1