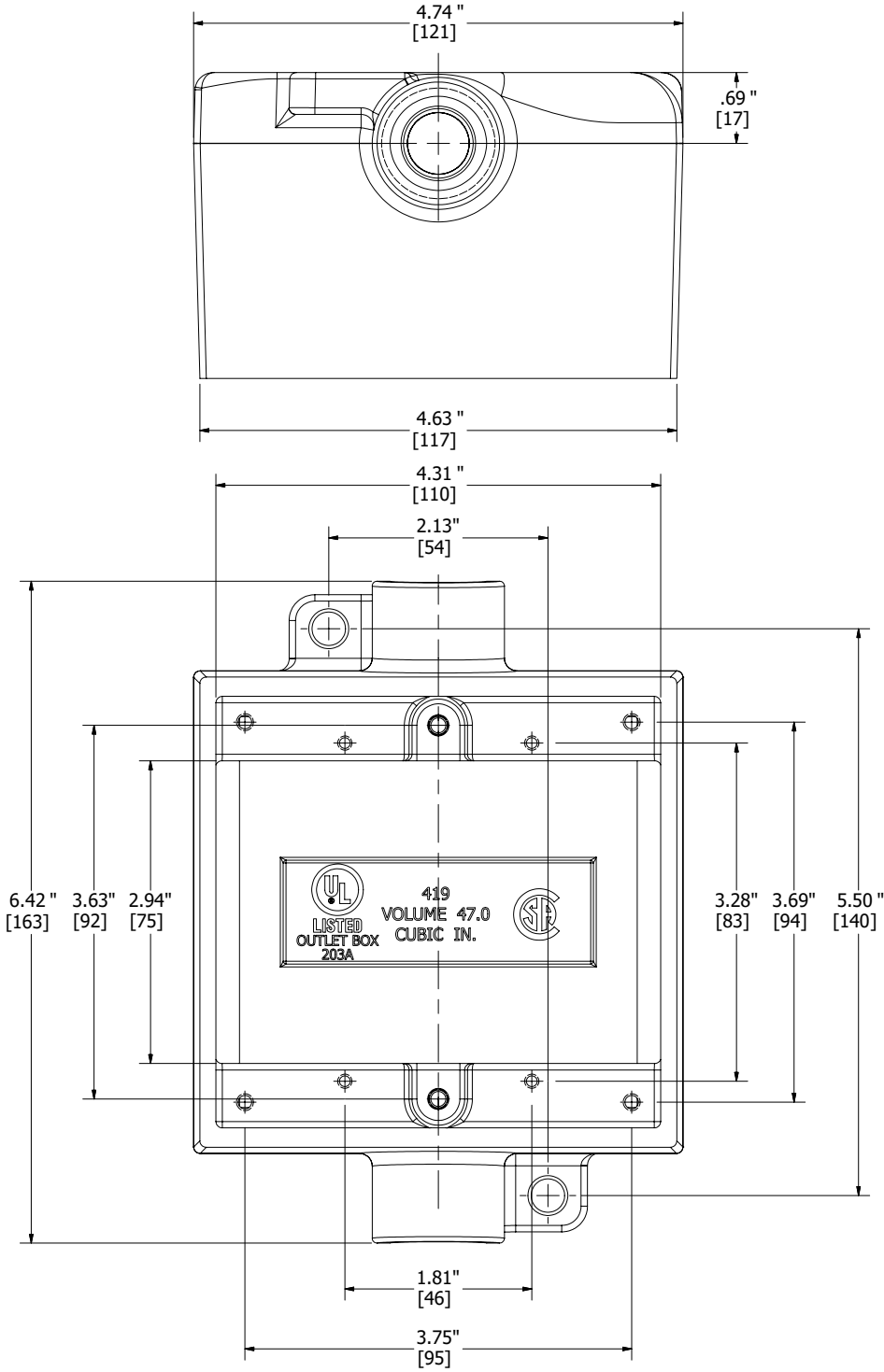


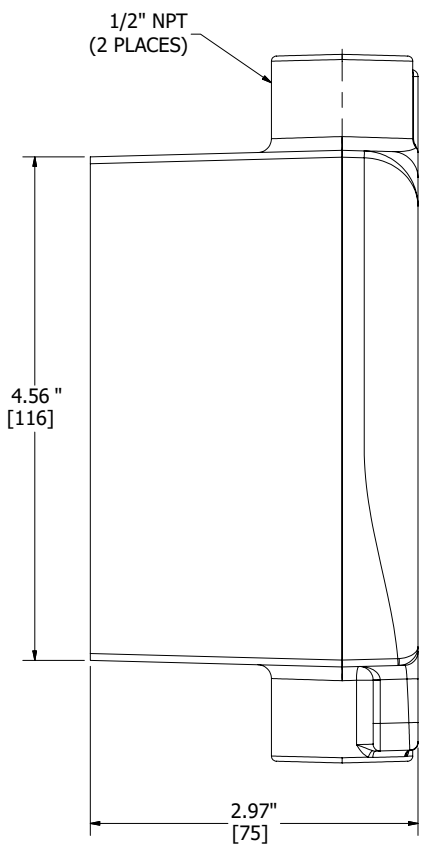


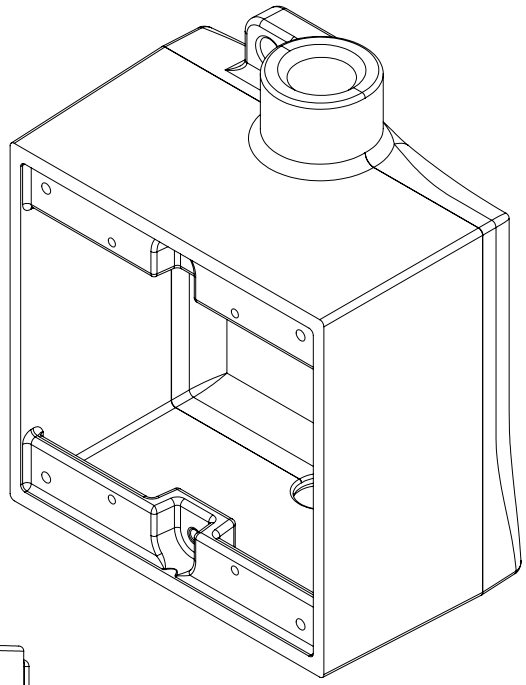

| CATALOG NUMBER | 2FDC-1 |
|---|---|
| KILLARK® | THIS DOCUMENT IS THE PROPERTY OF KILLARK. IT IS LOANED TO YOU AND MUST NOT BE USED IN ANY WAY DETRIMENTAL TO THE INTEREST OF KILLARK. |