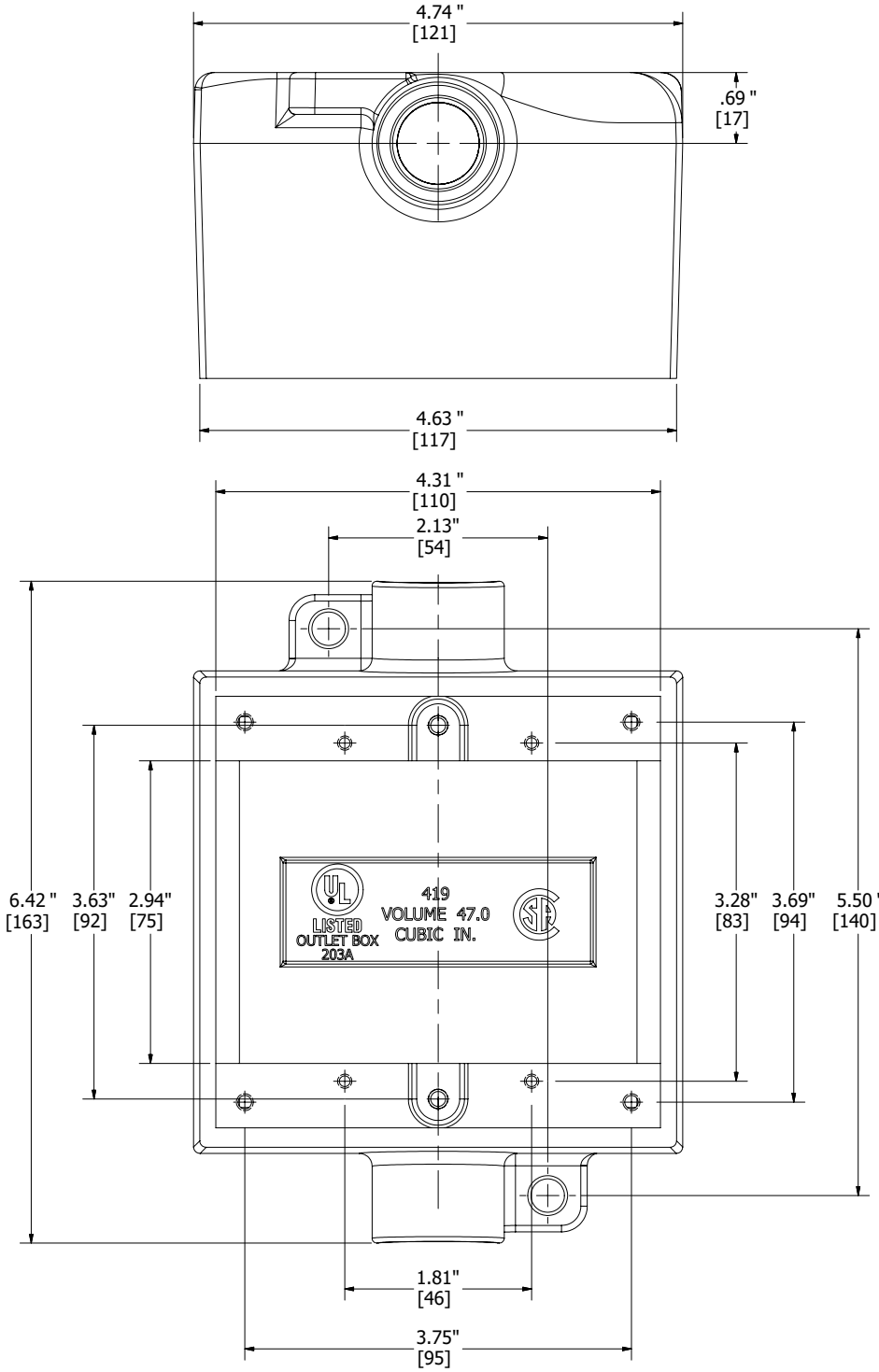

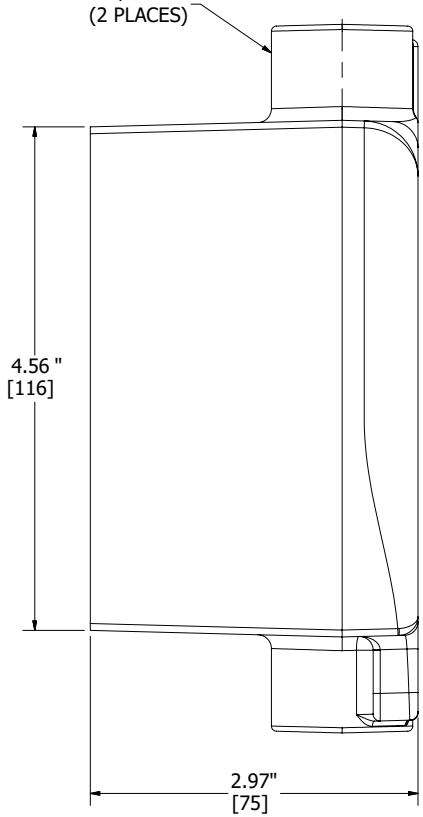

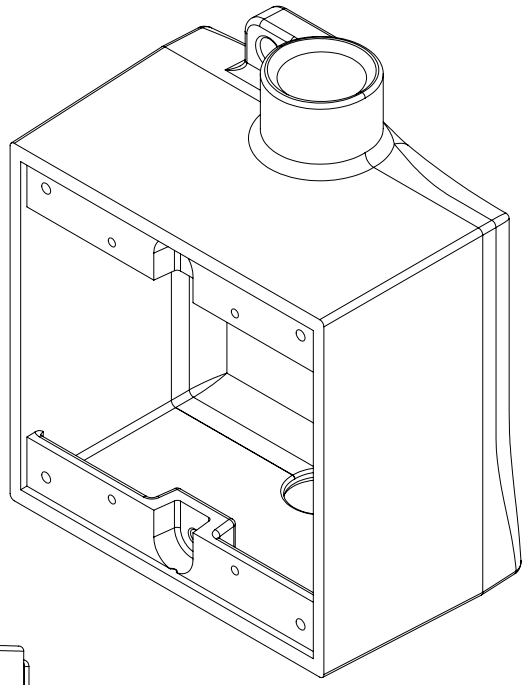

CATALOG NUMBER	2FDC-2
KILLARK®	THIS DOCUMENT IS THE PROPERTY OF KILLARK. IT IS LOANED TO YOU AND MUST NOT BE USED IN ANY WAY DETRIMENTAL TO THE INTEREST OF KILLARK.